Tally®

T9412

Maintenance manual **Laser printer**

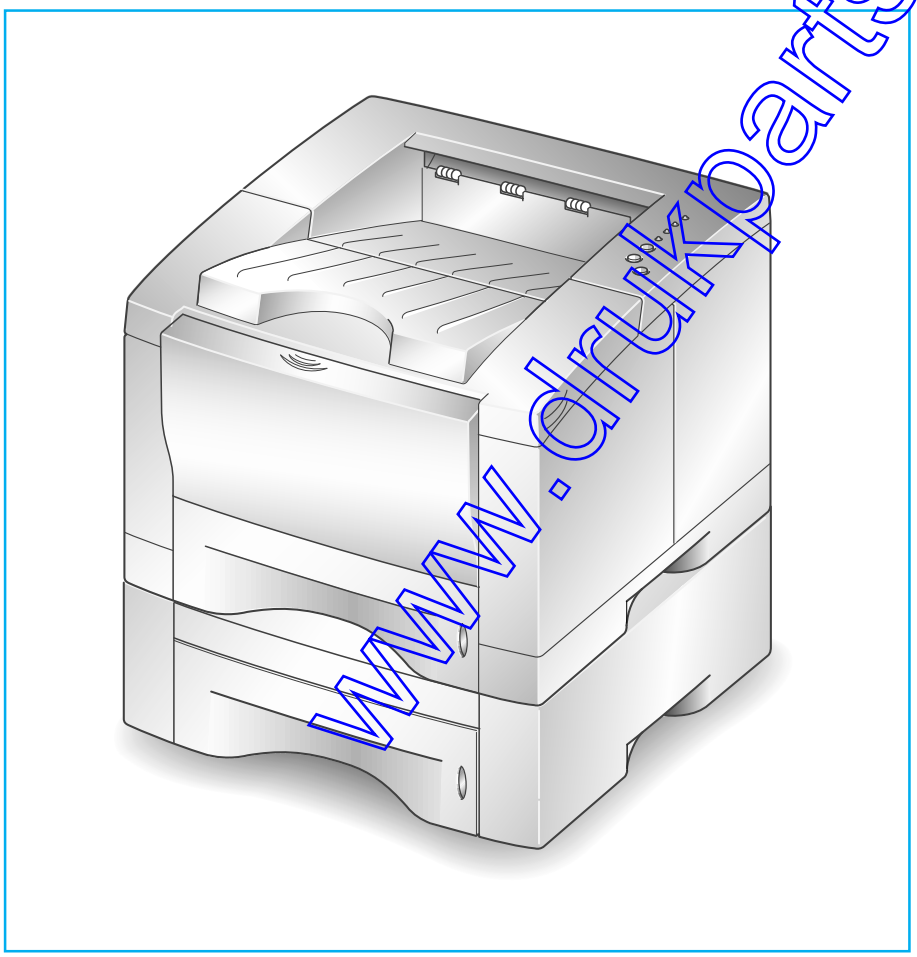

www.drukparts.pl

5. Exploded Views and Parts Lists(**T9412**)

5-1 Main Exploded View & Parts Lists

5-2 Cover Exploded View & Parts Lists

5-3 Frame Exploded View & Parts Lists

5-4 Exit Exploded View & Parts Lists

5-5 Fuser Exploded View & Parts Lists

5-6 Rack-MPF Exploded View & Parts Lists

5-7 Drive Exploded View & Parts Lists

5-8 Pick-Up Exploded View & Parts Lists

5-9 Cassette Exploded View & Parts Lists

5-10 Second Cassette Frame Exploded View & Parts Lists

www.drukparts.pl

5-1 Main Exploded View

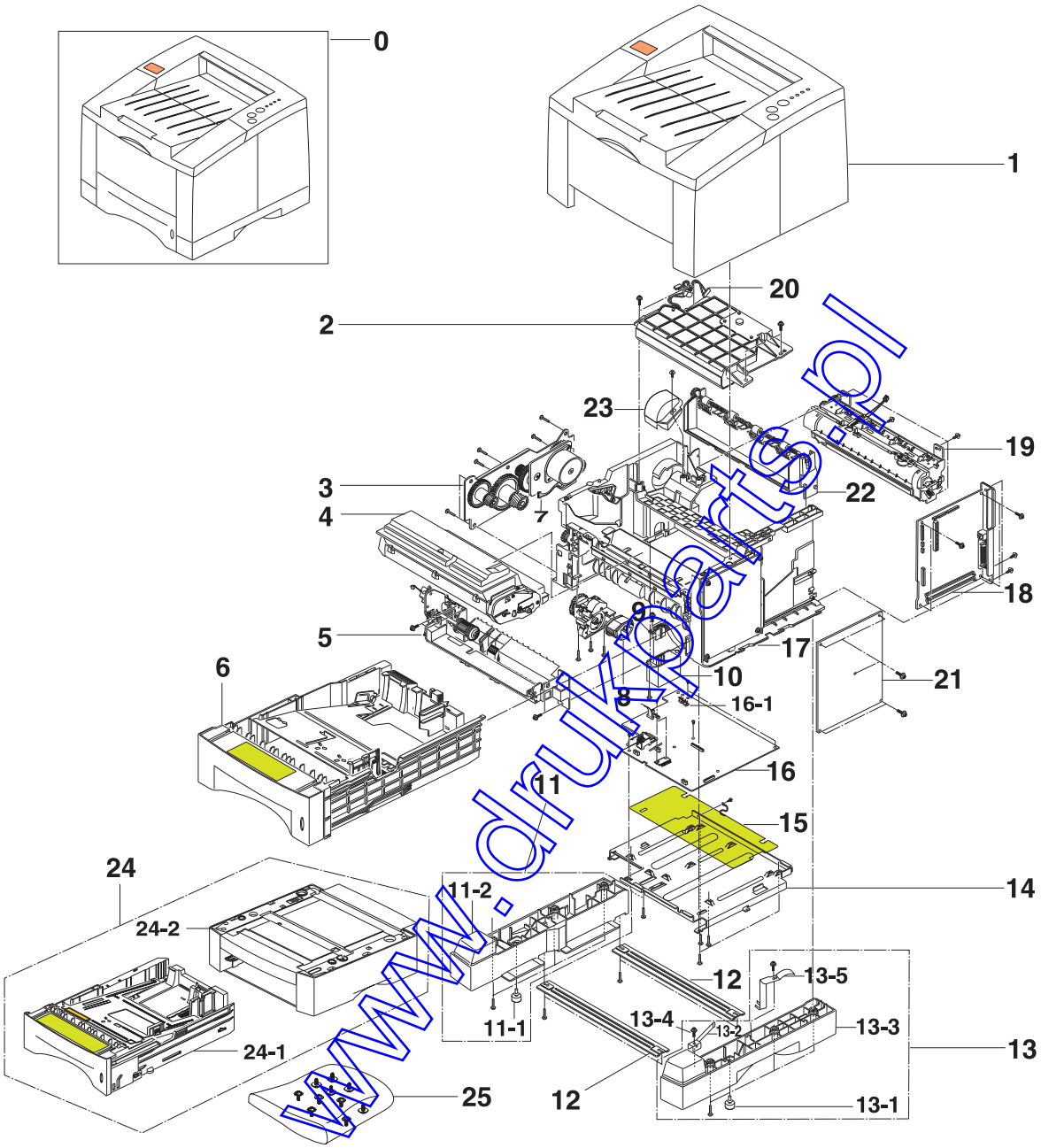

www.drukparts.pl

Main Parts Lists

Location No.	Description	Id. No.	Q'ty
1	ELA HOU TOP-HOUSING		1
2	UNIT-LSU	398 425	1
3	ELA UNIT-MOTOR		1
4	ELA UNIT-DEVE		1
5	ELA HOU-MPF		1
6	MEA RACK-FEEDER CST	398 426	1
7	CBF-HARNESS-MOTOR		1
8	MEA UNIT-FEEDER	398 427	1
9	PMO-CAP SENSOR		1
10	PMO-HOLDER SCF CN	398 428	1
11	MEA UNIT-BRKT BOTTOM(L)	398 429	1
11-1	FOOT-RUBBER		1
11-2	PMO-BRKT BASE L		1
12	IPR-BAR CROSS BOTTOM	398 430	2
13	MEA UNIT-BRKT BOTTOM(R)	398 431	1
13-1	FOOT-RUBBER		1
13-2	IPR-PLATE CST GAIDE		1
13-3	PMO-BRKT BASE R		1
13-4	SCREW-TAPTITE		1
13-5	IPR-GROUND SCF BASE		1
14	SHIELD-PCU		1
15	PCT-INSULATOR PCU		1
16	PBA MAIN-ENGINE_V2	398 432	1
16-1	FUSE-CARTRIDGE	398 403	1
17	ELA UNIT-FRAME BASE	398 433	
18	PBA MAIN CTRL	398 434	1
19	ELA UNIT-FUSER		1
20	CBF HARNESS-LSU		1
21	PCB PWR-HVPS	398 435	1
22	MEA RACK-HOU EXIT	398 436	1
23	PMO-DUCT FAN		1

www.drukparts.pl

5-2 Top Exploded View

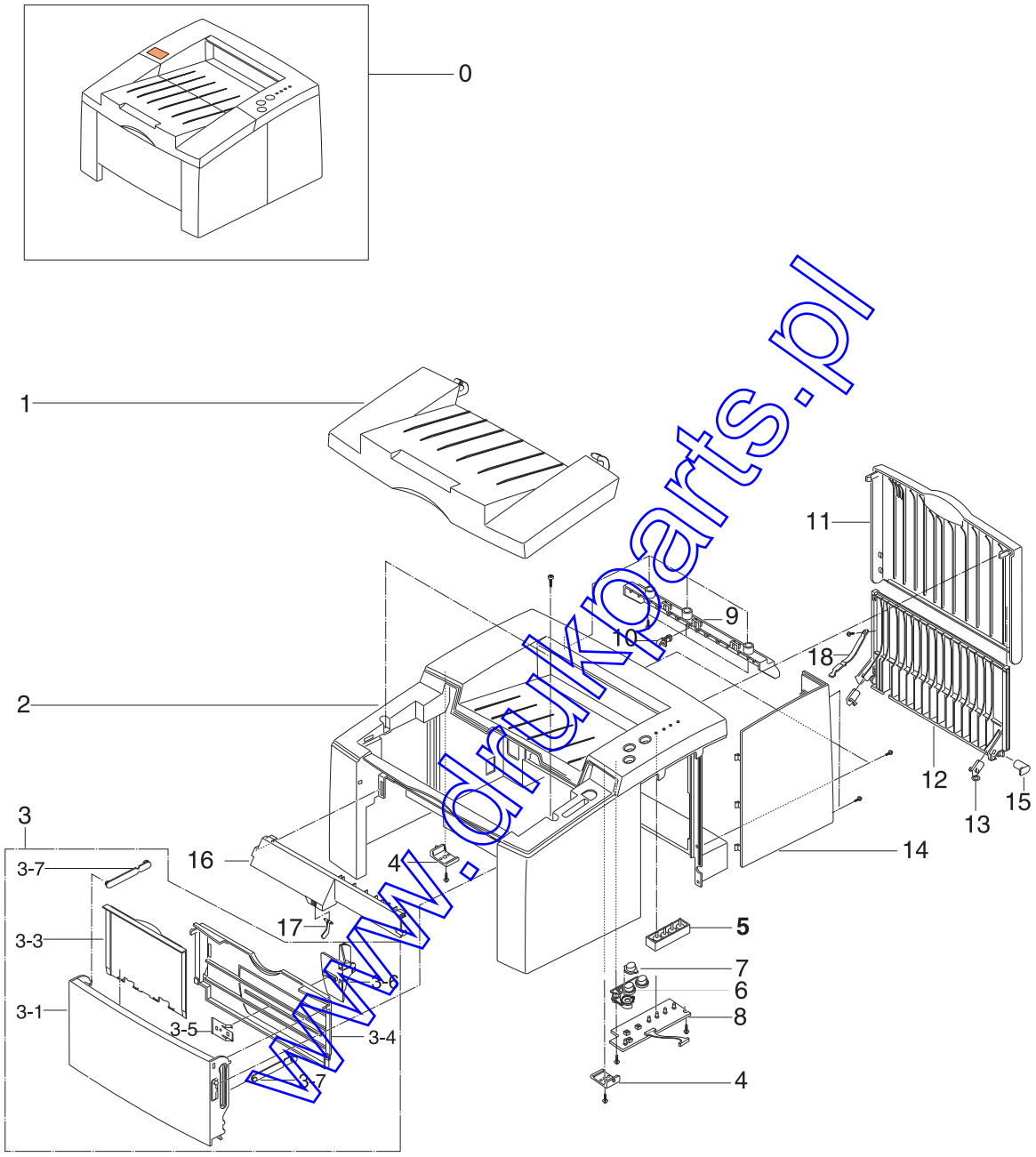

www.drukparts.pl

Top Parts Lists

Location No.	Description	Id. No.	Q'ty
0	ELA-HOU COVER MAIN	399 453	1
1	PMO-COVER OPEN		1
2	PMO-COVER MAIN		1
3	MEA UNIT-MP TRAY	398 438	1
3-1	PMO-COVER-MP		1
3-2	NPR-BADGE (45)		1
3-3	PMO-TRAY EXTENSION MP		1
3-4	PMO-TRAY HOLDER MP		1
3-5	IPR-GUIDE LATCH		1
3-6	PMO-ADJUSTER_P SIDE		1
3-7	PMO-TRAY LINK MP		2
4	STOPPER HINGE OPEN		2
5	PMO-LENS LED		1
6	PMO-KEY BUTTON		1
7	PMO-KEY SAVE MODE		1
8	PBA LED PANEL_II	399 454	1
9	PMO-GUIDE EXIT		1
10	PMO-BUSHING F/DOWN		1
11	PMO-COVER REAR	398 439	1
12	PMO-STACKER REAR	398 440	1
13	IPR-SPRING LOCKER REAR	398 441	2
14	PMO-COVER CONTROLLER	398 442	1
15	PMO-CAP REAR	398 443	1
16	PMO-SUPPORT MP TRAY		1
17	PMO-LEVER_EMPTY, MP		1
18	PMO-STOPPER_EXIT,P		1
S1	SCREW-TAPTITE		7

www.drukparts.pl

5-3 Frame Exploded View

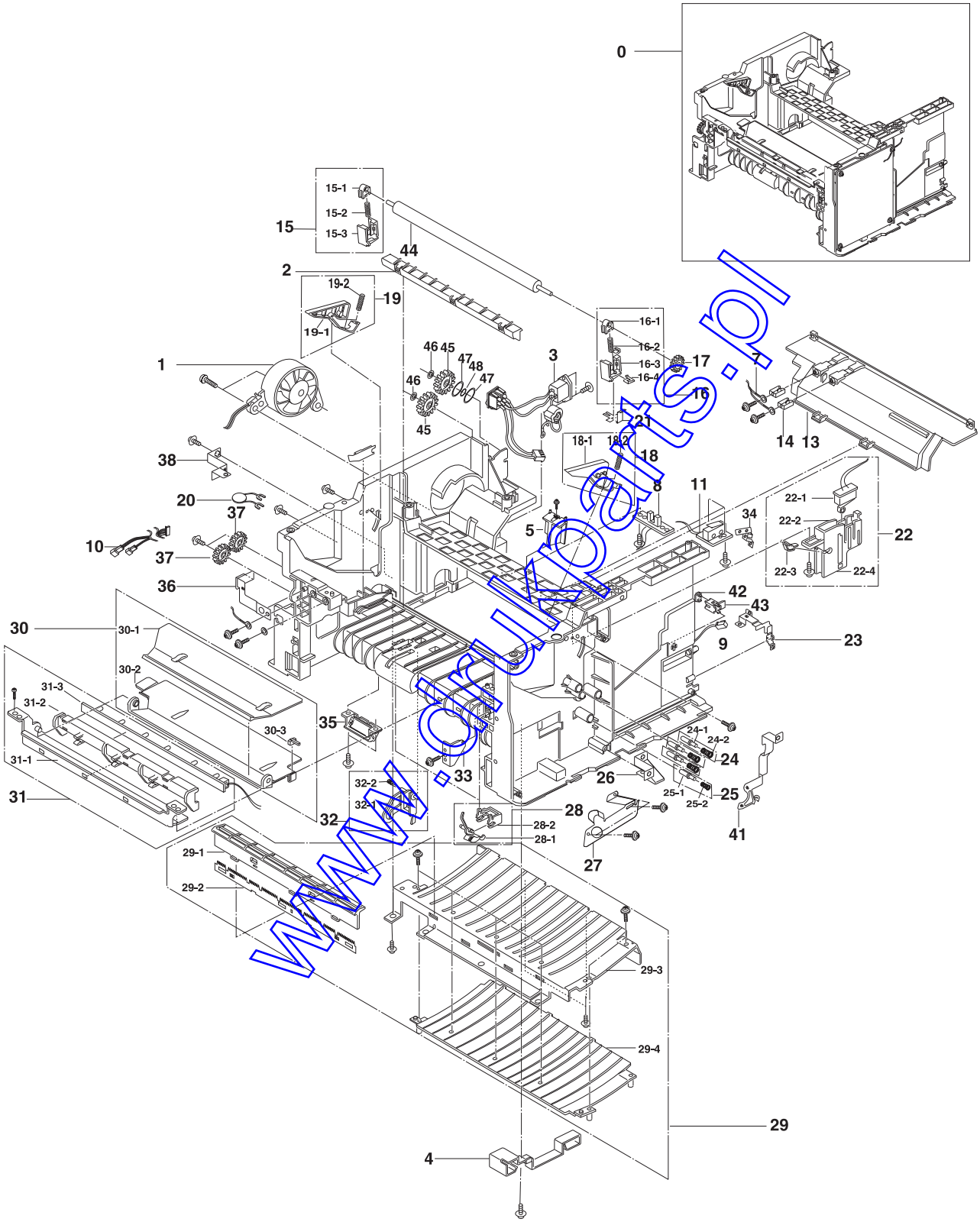

www.manuparts.pl

Frame Parts Lists

Location No.	Description	Id. No.	Q'ty
0	ELA UNIT-FRAME BASE		1
1	FAN-DC-HAWK	398 444	1
2	PMO-GUIDE RIB		1
3	CBF HARNESS-INLET ASS'Y		1
4	PMO-HOLDER WIRE		1
5	PMO-KEY DEVE HAWK		1
6	CBF HARNESS-ENGINE_CONTROL		1
7	CBF-HARNESS-FUSER		1
8	PBA SUB-EXIT SENSOR	398 445	1
9	CBF-HARNESS-THERMISTOR JOINT		1
10	CBF-HARNESS-MP_CLUTCH ENG		1
11	PBA SUB-FUSER_SW	398 446	1
13	PMO-FRAME COVER		1
14	IPR-TERMINAL FU		2
15	ELA UNIT-HOLDER TR L	398 447	1
15-1	PMO-BUSHING TR		1
15-2	SPRING TR L HAWK		1
15-3	PMO-TRANSFER HOLDER L		1
16	ELA UNIT-HOLDER TR R	398 448	1
16-1	PMO-BUSHING TR		1
16-2	SPRING TR R HAWK		1
16-3	PMO-TRANSFER HOLDER R		1
16-4	IPR-PLATE TR		1
17	GEAR-TR29	398 449	1
18	ELA UNIT-GUIDE DEVE L	398 450	1
18-1	PMO-GUIDE DEVE L		1
18-2	SPRING GUIDE DEVE		1
19	ELA UNIT-GUIDE DEVE R	398 451	1
19-1	PMO-GUIDE DEVE R		1
19-2	SPRING GUIDE DEVE		1

www.drukparts.pl

Frame Parts Lists

Location No.	Description	Id. No.	Q'ty
20	ELA HOU-VARISTOR		1
21	IPR-TERMINAL TR HAWK		1
22	ELA UNIT-SENSOR DEVE		1
22-1	PBA SUB-SWITCH	398 452	1
22-2	PMO-HOLDER ACTUATOR		1
22-3	PMO-ACTUATOR DEVE		1
23	GROUND FU		1
24	ELA UNIT-TERMINAL TR L	398 455	3
24-1	ICT-SHAFT HV LARGE		3
24-2	SPRING-HV LARGE		3
25	ELA UNIT-TERMINAL TR S	398 456	1
25-1	ICT-SHAFT HV LARGE		1
25-2	SPRING-HV SMALL		1
26	GROUND-HVPS		1
27	IPR-REMOVE KEY		1
28	ELA UNIT-ACTUATOR FEED	398 457	1
28-1	PMO-ACTUATOR FEED		2
28-2	PMO-HOLDER ACTUATOR		2
29	ELA UNIT-GUIDE TRANSFER		1
29-1	PMO-HADER SAW PLATE		1
29-2	IPR-PLATE SAW		1
29-3	IPR-GUIDE TRANSFER HAWK		1
29-4	PMO-GUIDE RIB TR		1
30	ELA UNIT-GUIDE FEED	398 453	1
30-1	PMO-GUIDE OPTIC		1
30-2	GUIDE FEED		1
30-3	PMO-HOLDER G/PAPER		1
31	ELA UNIT-PTL	398 454	1
31-1	GUIDE PLATE FEED		1
31-2	PMO-HOLDER PTL		1
31-3	PBA SUB-PTL		1

www.drukparts.pl

Location No.	Description	Id. No.	Q'ty
32	ELA UNIT-EMPTY ACT	399 458	1
32-1	PMO-ACTUATOR EMPTY HAWK		1
32-2	SPRING EMPTY		1
33	PMO-HINGE GUIDE FEED		1
34	GND ICU		1
35	PMO-CAP SENSOR	399 459	1
36	GND MP		1
37	GEAR-P/UP DRIVE	398 466	2
38	GROUND MOTOR		1
39	IPR-GUIDE DUST		1
41	IPR-OPC-HAWK		1
42	CAP CONNECTOR L		1
43	CAP CONNECTOR U		1
44	MEC-ROLLER TRANSFER	398 455	1
45	GEAR IDLE 27	398 467	2
46	RING-CS		2
47	WASHER-PLAIN		2
48	IPR-WASHER SPRING SU		1

www.drukparts.pl

5-4 Exit Exploded View

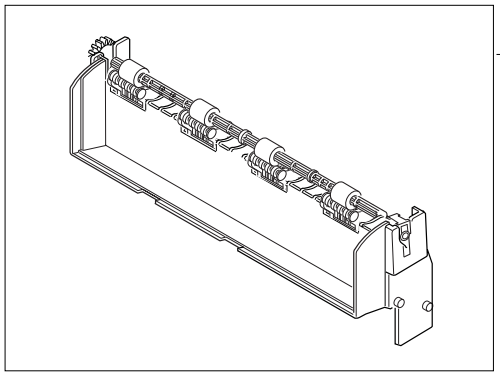

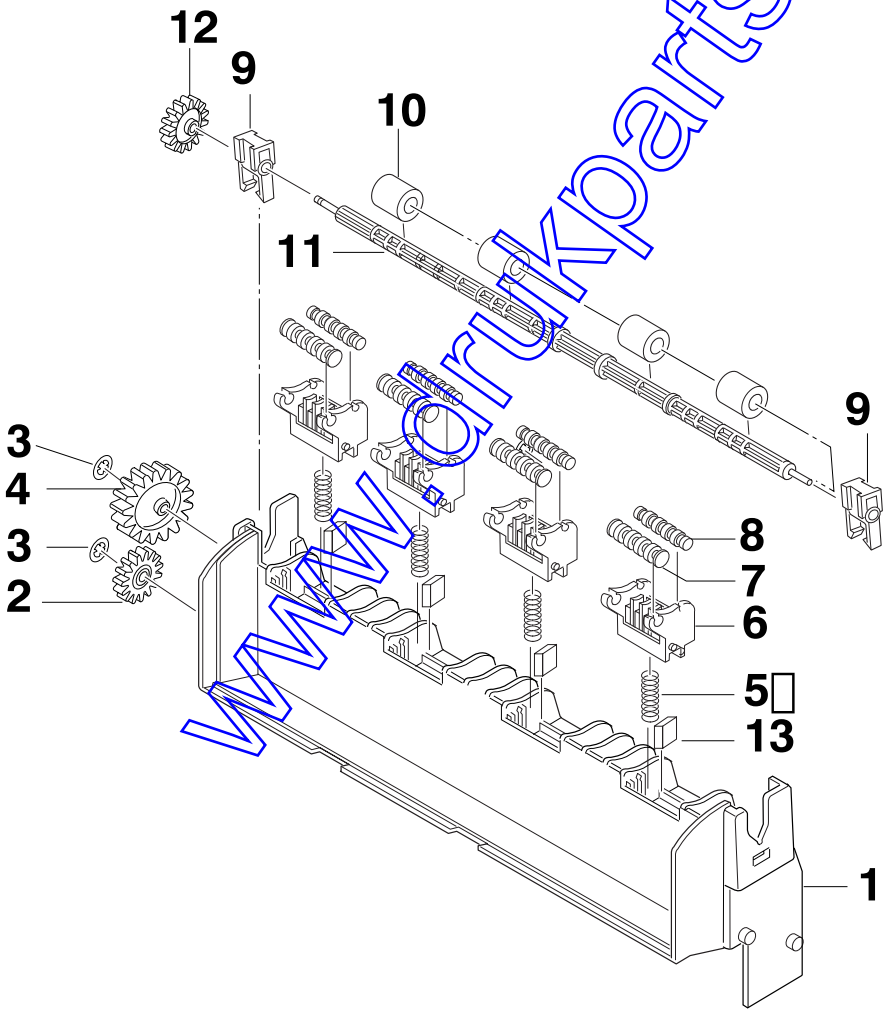

www.drukparts.pl

Exit Parts Lists

Location No.	Description	Id. No.	Q'ty
0	MEA RACK-HOU EXIT		1
1	PMO-FRAME REAR		1
2	GEAR-IDLE 15		1
3	RING-CS		2
4	GEAR-IDLE 25		1
5	SPRING-F/DOWN		4
6	PMO-HOLDER EXIT_F/DOWN		4
7	PMO-ROLLER-EXIT, MAIN		4
8	PMO-ROLLER-EXIT, FR		4
9	MEC-BEARING EXIT		2
10	RMO-RUBBER EXIT		4
11	PMO-SHAFT EXIT_F/DOWN		1
12	GEAR-EXIT		1
13	RMP-RUBBER EXIT_F/UP		4

www.drukparts.pl

5-5 Fuser Exploded View

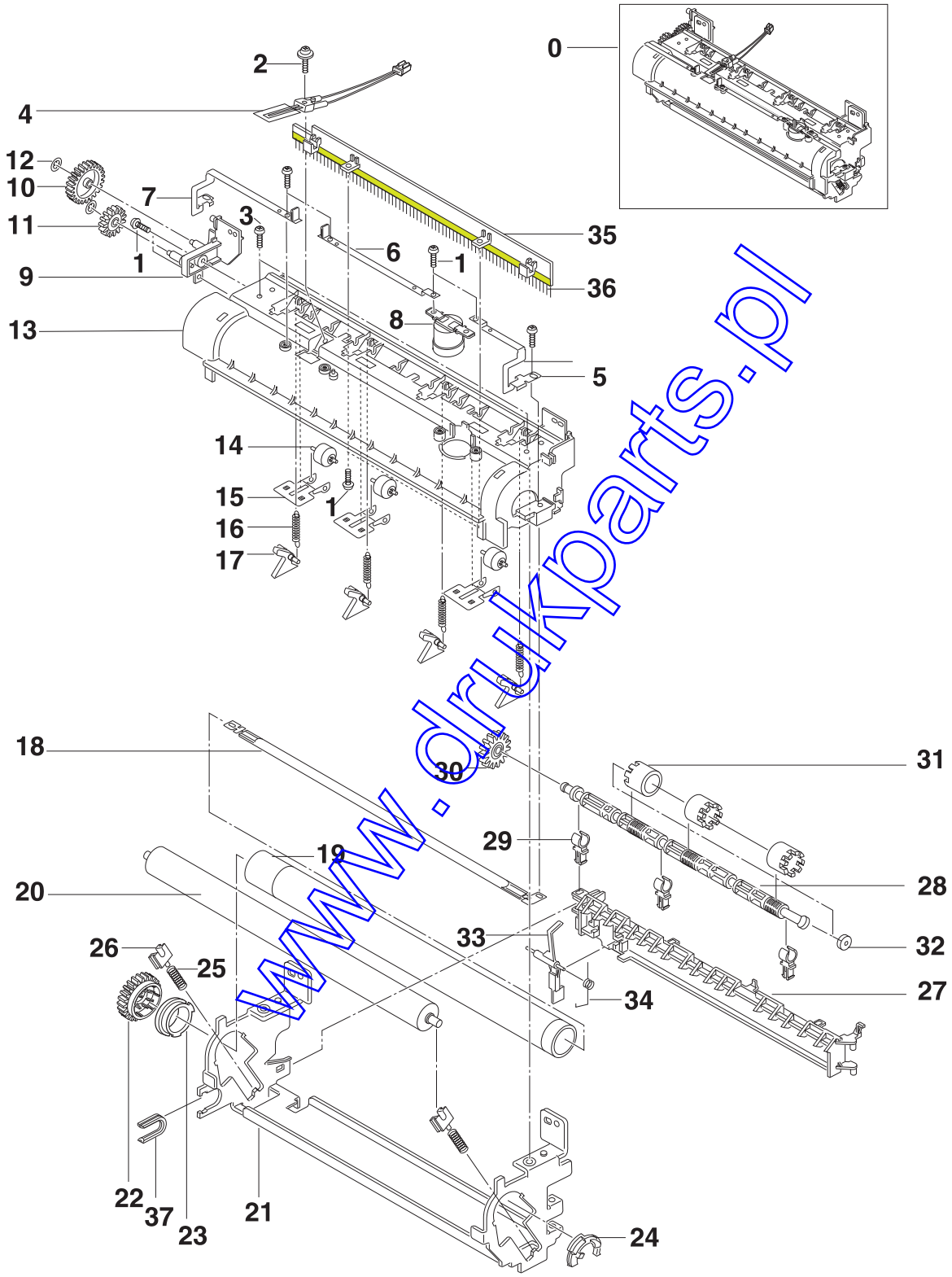

www.drukparts.pl

Fuser Parts Lists

Location No.	Description	Id. No.	Q'ty
0	ELA UNIT FUSER (220V)	398 456	1
1	SCREW TAPTITE M3 x 8, BH+		6
2	SCREW TAPTITE M3 x 10, FH+		1
3	SCREW MACHINE M3 x 6		2
4	THERMISTOR-FUSER	398 457	1
5	NPR-ELECTRODE FU_R		1
6	NPR-ELECTRODE FU_M		1
7	NPR-ELECTRODE FU_L		1
8	THERMOSTAT	398 458	1
9	BRKT GEAR FUSER		1
10	GEAR-IDLE 25	399 460	1
11	GEAR-IDLE 15	399 461	1
12	RING-CS		2
13	PMO-COVER FUSER		1
14	ROLLER EXIT_F/UP		3
15	IRP-EXIT_F/UP (SPRING)		3
16	SPRING-CLAW	399 462	4
17	GUIDE-CLAW		4
18	LAMP-HALOGEN	398 459	1
19	NEX-ROLLER-HEAT		1
20	MEA-ROLLER PRESSORE		1
21	ICT-FRAME FUSER		1
22	GEAR FUSER, Z32		1
23	PMO-BUSHING HR,L		1
24	PMO-BUSHING HR_R		1
25	SPRING-BEARING PR		2
26	PMO-BUSHING PR		2
27	PMO-GUIDE REAR	398 460	1
28	PMO-SHAFT EXIT_F/UP		1
29	PMO-BUSHING TX		3
30	GEAR-EXIT	398 463	1
31	RMO-RUBBER EXIT		3
32	RMO-RUBBER EXIT_F/UP		1
33	PMO-ACTUATOR EXIT		1
34	SPRING-ACTUATOR		1
35	PMO-HOLDER BRUSH		1
36	MEC-BRUSH ANTISTATIC		1
37	PMO-HOLDER SHAFT		1
38	SEREW TAPTITE M3X6,BH+		4

www.drukparts.pl

5-6 Rack-MPF Exploded View

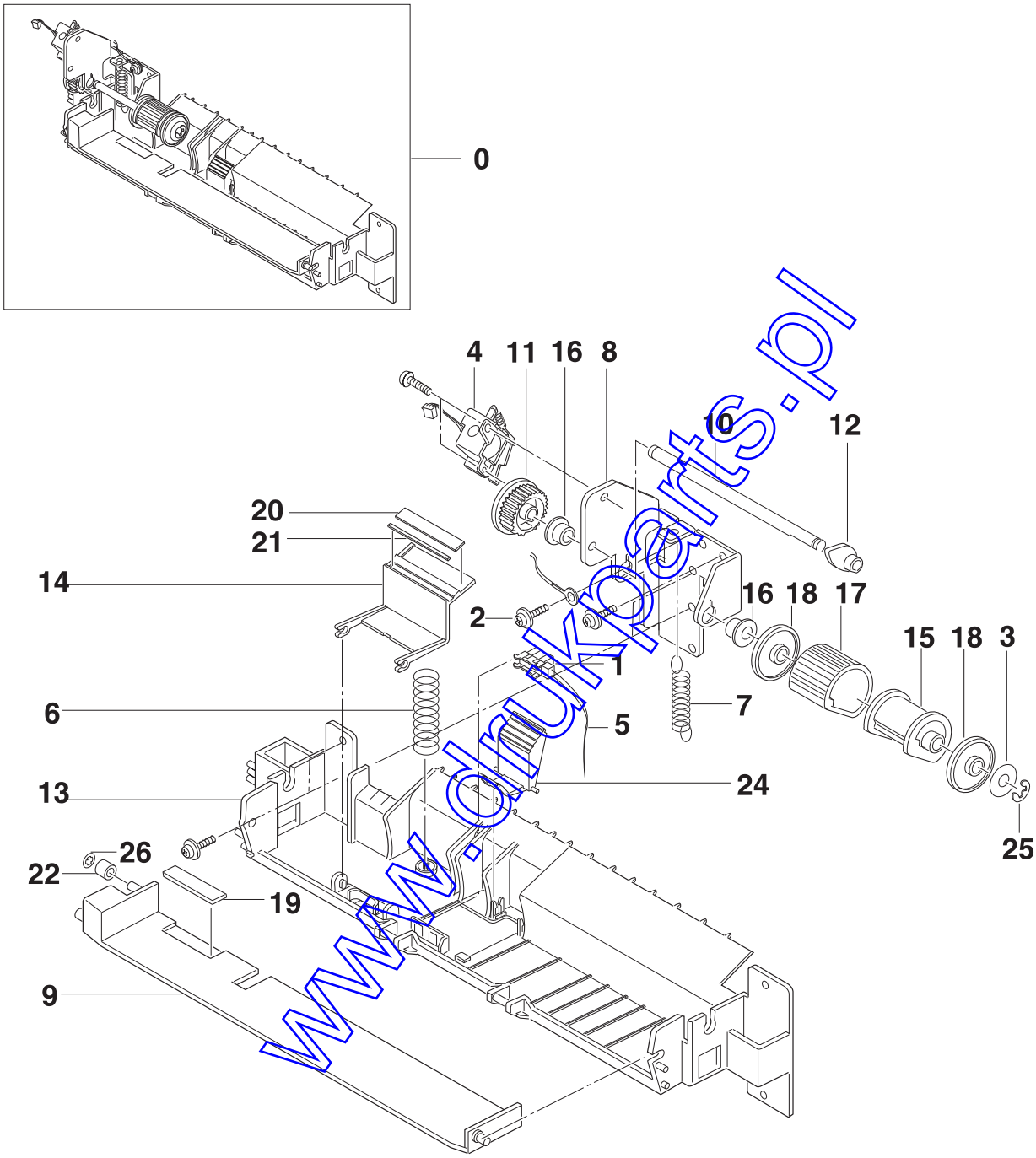

www.drukparts.pl

Rack-MPF Parts Lists

Location No.	Description	Id. No.	Q'ty
0	ELA HOU-MPF	398 461	1
1	PHOTO-INTERRUPTER	399 465	1
2	SCREW-TAPTITE		2
3	WASHER-PLAIN		1
4	SOLENOID-HAWK	398 462	1
5	CBF-HARNESS-MP_EMPTY		1
6	SPRING-PICKUP MP		1
7	SPRING-PICK UP MP	399 466	1
8	BRACKET_MP		1
9	PMO-PLT KNOCK UP		1
10	ICT-SHAFT PICKUP,MP		1
11	PMO-GEAR PICKUP MP		1
12	PMO-CAM PICK UP(MP)		1
13	PMO-FRAME MP		1
14	PMO-HOLDER PICKUP(MP)		1
15	PMO-HOUSING_P/UP MP		1
16	BEARING-PICK UP		2
17	RPR-RUBBER_P/UP MP	398 463	1
18	PMO-IDLE PICK UP MP		2
19	MPR-PAD KNOC UP MP		1
20	RCR-FRICTION PAD 1 MP		1
21	RCR-FRICTION PAD 2 MP		1
22	IPR-RING KOCK UP,MP		1
23	SCREW TAPTITE		2
24	PMO-ADJUST_END,MP		1
25	RING-E		1
26	RING-CS		1

www.drukparts.pl

5-7 Drive Exploded View

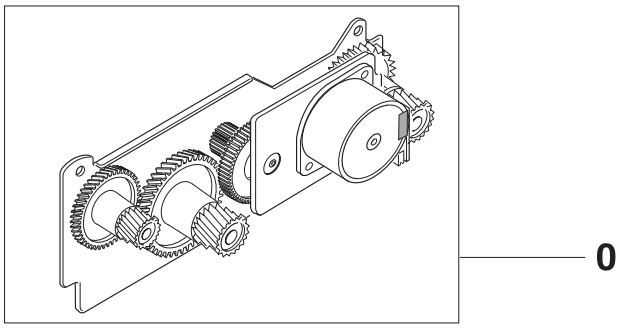

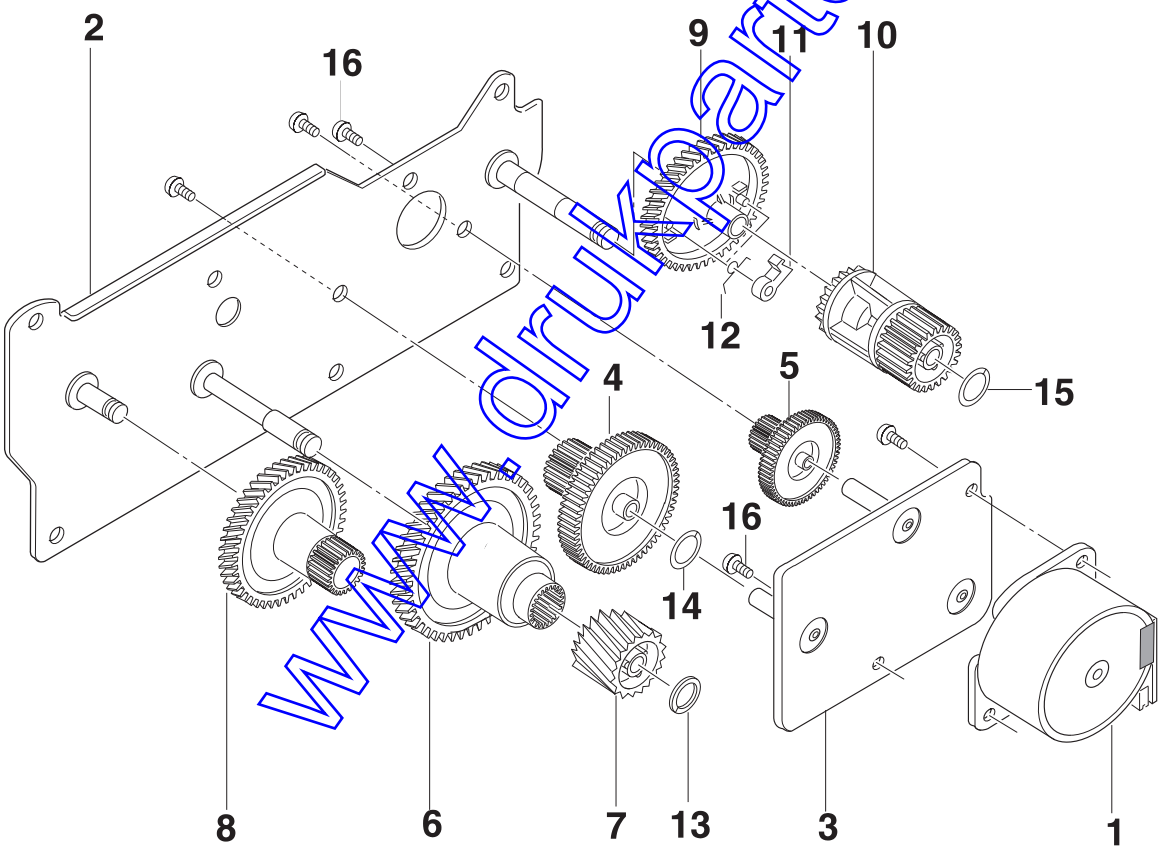

www.drukparts.pl

Drive Parts Lists

Location No.	Description	Id. No.	Q'ty
0	ELA UNIT-MOTOR	398 464	1
1	MOTOR-STEP	398 465	1
2	IPR-BRKT GEAR		1
3	IPR-BRKT MOTOR		1
4	GEAR-RDCN 145-70		1
5	GEAR-RDCN 90-24		1
6	GEAR-OPC DRV 135		1
7	GEAR-OPC DRIVE2		1
8	GEAR-FEED DRV		1
9	GEAR-CLUTCH 56		1
10	GEAR-FUSER DRV23		1
11	PMO-CLUTCH LEVER		2
12	SPRING-CLUTCH		2
13	WASHER-PLAIN		1
14	MPR-POLYWASHER 8		1
15	WASHER-PLAIN		1
16	SCREW-MACHINE		5

www.drukparts.pl

5-8 Pick-Up Exploded View

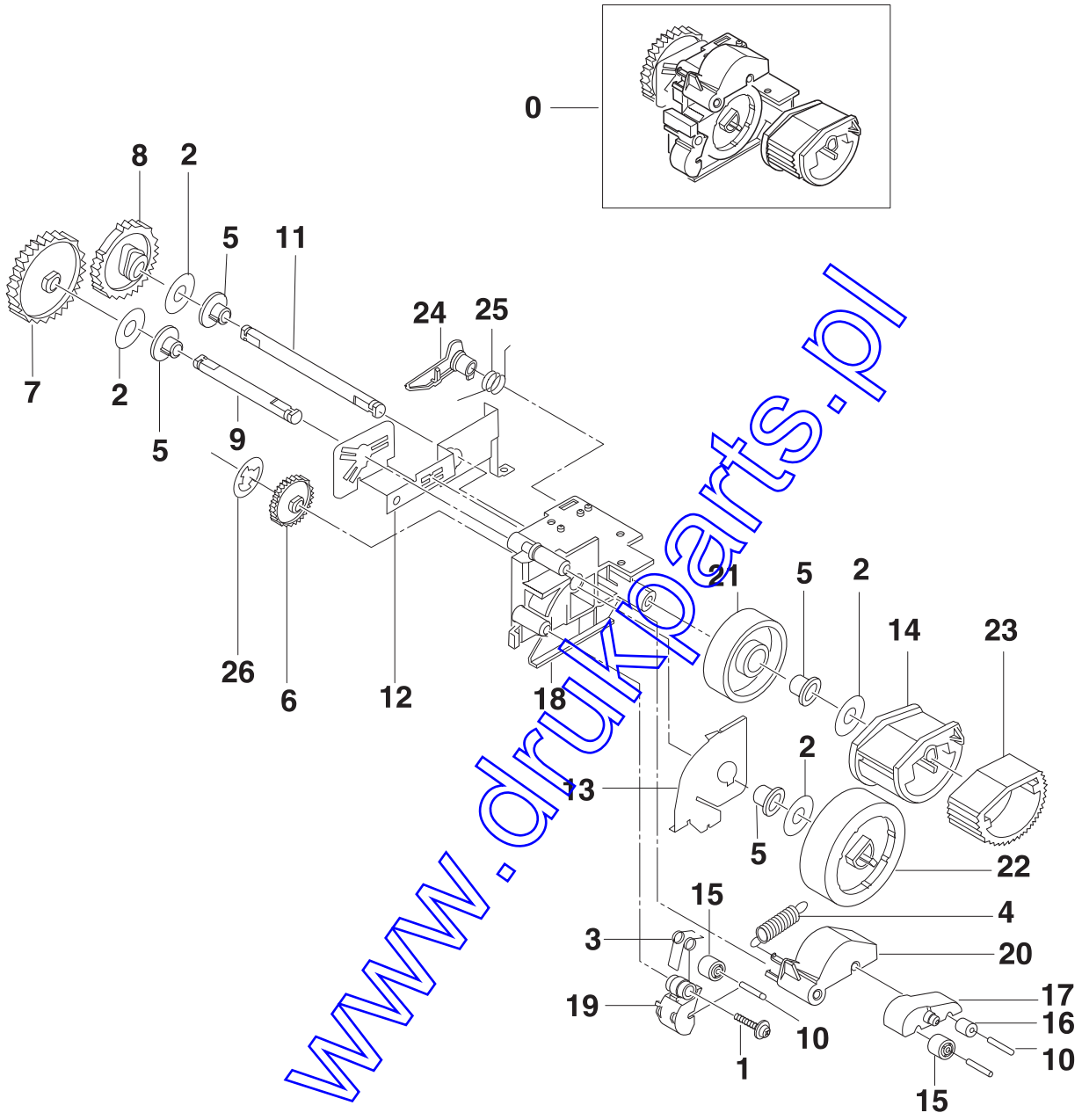

www.drukparts.pl

Pick-Up Parts Lists

Location No.	Description	Id. No.	Q'ty
0	MEA RACK-FEEDER	399 467	1
1	SCREW-TAPTITE		1
2	WASHER-PLAIN		4
3	SPRING-FEED(1)	399 468	1
4	SPRING-FEED(2)	399 469	1
5	BEARING-PICK UP		4
6	GEAR-P/UP DRIVE		1
7	GEAR-FEED		1
8	GEAR-PICK UP(12)		1
9	IPR-SHAFT FEED		1
10	IPR-SHAFT FEED IDLER		3
11	IPR-SHAFT PICK UP		1
12	GROUND_FEED		1
13	IPR-GUIDE_FEED		1
14	PMO-HOUSING P/UP		1
15	PMO-ROLLER FEED L		2
16	PMO-ROLLER FEED S		1
17	PMO-SUB HOLDER FEED		1
18	PMO-FRAME_FEED		1
19	PMO-HOLDER FEED(1)		1
20	PMO-HOLDER FEED(2)		1
21	PMO-IDLE PICK_UP		1
22	PMO-ROLL_FEED_DRV 12		1
23	RMO-RUBBER PICK_UP	396 364	1
24	RMO-LEVER PICK_UP		1
25	SPRING PICK UP(12)		1
26	RING-CS		1

www.drukparts.pl

5-9 Cassette Exploded View

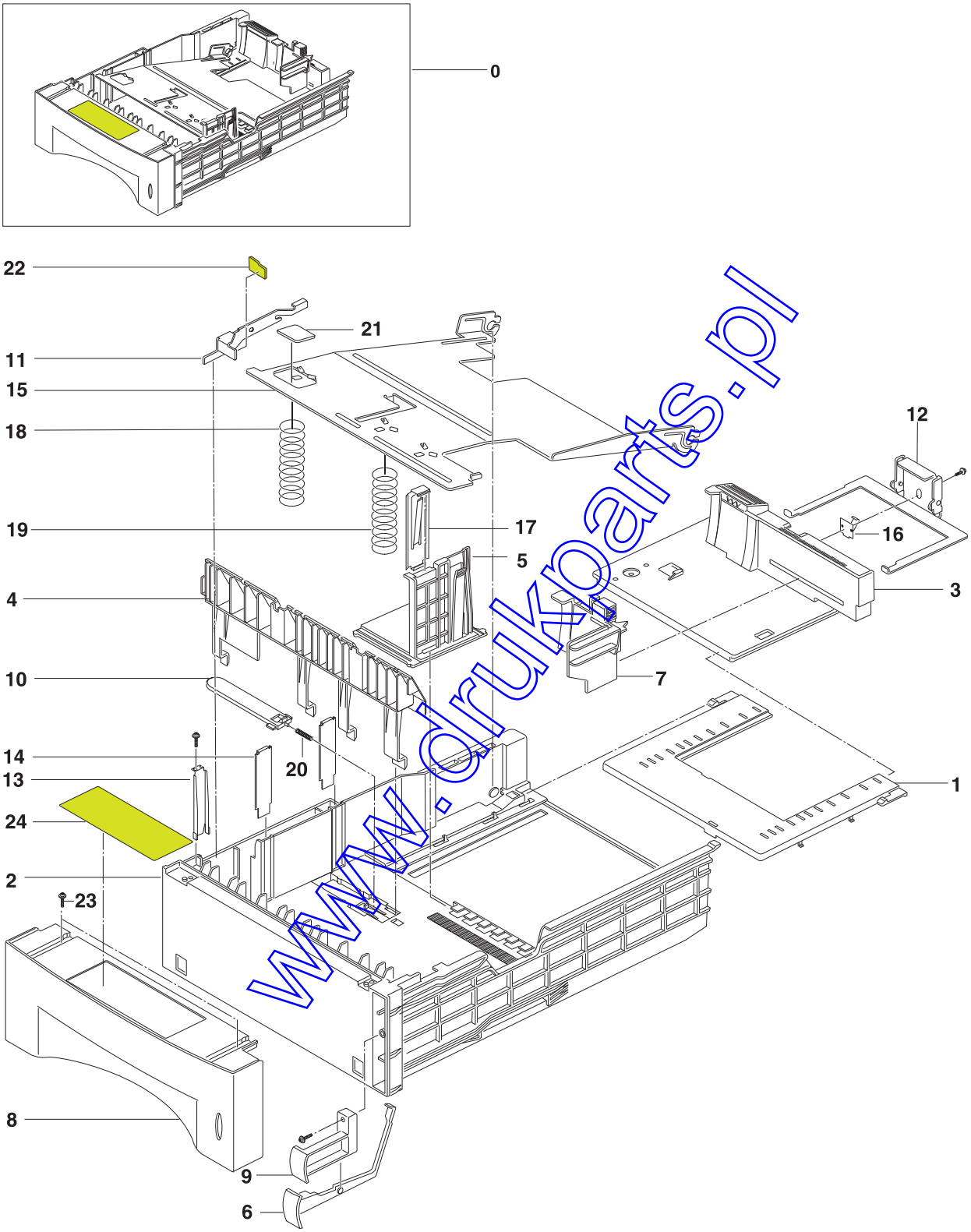

www.drukparts.pl

Cassette Parts Lists

Location No.	Description	Id. No.	Q'ty
0	MEA RACK-FEEDER CST (500)	398 426	1
1	PMO-COVER GUIDE EXT		1
2	PMO-FRAME CASSETTE		1
3	PMO-GUIDE EXT CST		1
4	PMO-GUIDE PAPER		1
5	PMO-GUIDE SIDE CST		1
6	PMO-INDICATOR EMPTY		1
7	PMO-SIDE GUIDE EXT		1
8	PMO-SUB GUIDE CAST		1
9	PMO-HOLDER_INDICATOR		1
10	PMO-LOCKER PLATE		1
11	IPR-FINGER		1
12	IPR-GUIDE EXT LOCK		1
13	IPR-GUIDE PAPER SCF		1
14	IPR-GUIDE PLT PAPER		2
15	IPR-PLATE KNOCK UP		1
16	IPR-PLATE SPR LOCK		1
17	IPR-SPR PLT G/SIDE		1
18	SPRING PLATE K/UP 1		1
19	SPRING PLATE K/UP 2		1
20	SPRING LOCKER,PLATE		1
22	RCR-PAD FINGER		1
23	SCREW TAPTITE M3 x 10 NI		7
24	LABEL(R)-CASSETTE		1

www.drukparts.pl

5-10 Second Cassette Frame Exploded View (option)

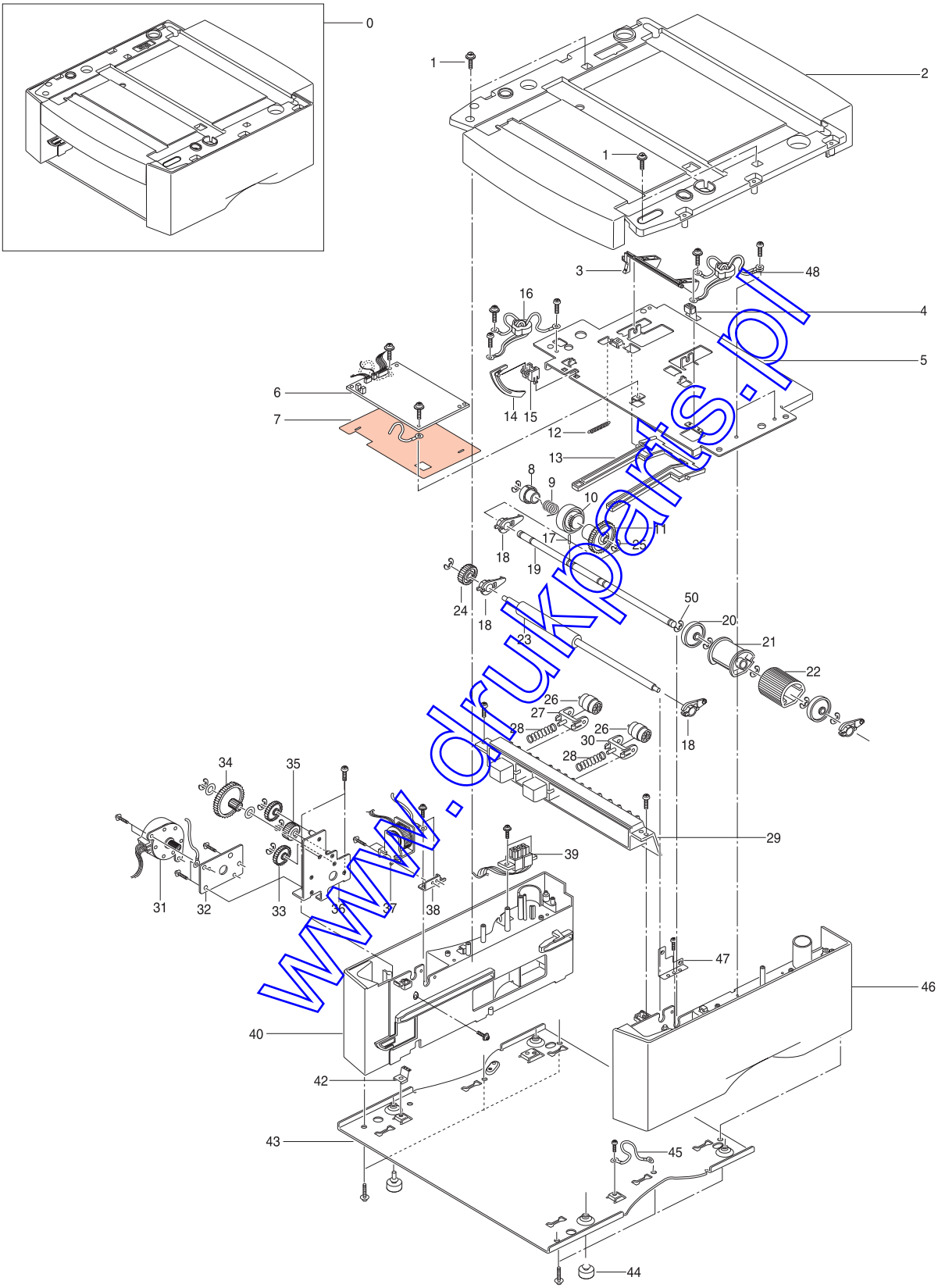

www.drukparts.pl

Second Cassette Frame Parts List (option)

Location No.	Description	Id. No.	Q'ty
0	MEA ETC-FRAME SCF	1	
1	SCREW-TAPTITE		19
2	PMO-FRAME UPPER		1
3	PMO-GUIDE ENV		1
4	IPR-GROUND TOP		1
5	CASE BODY-TOP		1
6	PBA SUB-SCF	399 470	1
7	PCT-INSULATOR SCF HAWK		1
8	PMO-HUB CLUTCH		1
9	SPRING-TS CLUTCH		1
10	PMO-COLLAR_CLUTCH_PI		1
11	GEAR-P/UP OPTION		1
12	SPRING-IDLE,SCF		1
13	PMO-ARM ENV		1
14	PMO-SENSOR LEVER		1
15	PMO-SENSOR FRAME		1
16	CBF HARNESS-SCF Motor GND		1
17	ICT-PIN_PARELLED,P/U		1
18	PMO-BEARING SHAFT		4
19	IPR-SHAFT PICK UP		1
20	PMO-IDLE PICKUP		2
21	PMO-P/UP HOUSING		1
22	RPR-RUBBER-PICKUP,SCF	399 471	1
23	MEC-FEED ROLLER,SCF		1
24	GEAR-FEED (SCF)		1
25	RING-E		7
26	PMO-IDLE FEED		2
27	PMO-IDLE FRAME		1
28	SPRING-PAD		2
29	PMO-GUIDE PAPER2		1
30	PMO-IDLE FRAME1		1
31	MOTOR-SCF	399 472	1
32	IPR-SCF MOTOR 1		1
33	GEAR-IDLE(Z=30)		2
34	GEAR-IDLE(SCF)		1
35	GEAR-IDLE OPTION		1
36	IPR-SCF MOTOR		1
37	SOLENOID-MAGNET	399 473	1
38	IPR-SCF SOLENOID		1
39	CBF HARNESS-SCF_8P		1

www.drukparts.pl

Location No.	Description	Id. No.	Q'ty
40	PMO-FRAME LEFT		1
41	SCREW-TAPTITE		14
42	IPR-GROUND BOTTOM		1
43	CASE BODY-BOTTOM		1
44	FOOT-RUBBER SCF		4
45	CBF HARNESS-SCF GND		1
46	PMO-FRAME RIGHT		1
47	IPR-GROUND FEED		1
48	CBF HARNESS-SCF FEED GND		1
49	SCREW-MACHINE		3
50	RING-E		5

www.drukparts.pl

Second Cassette Exploded View (option)

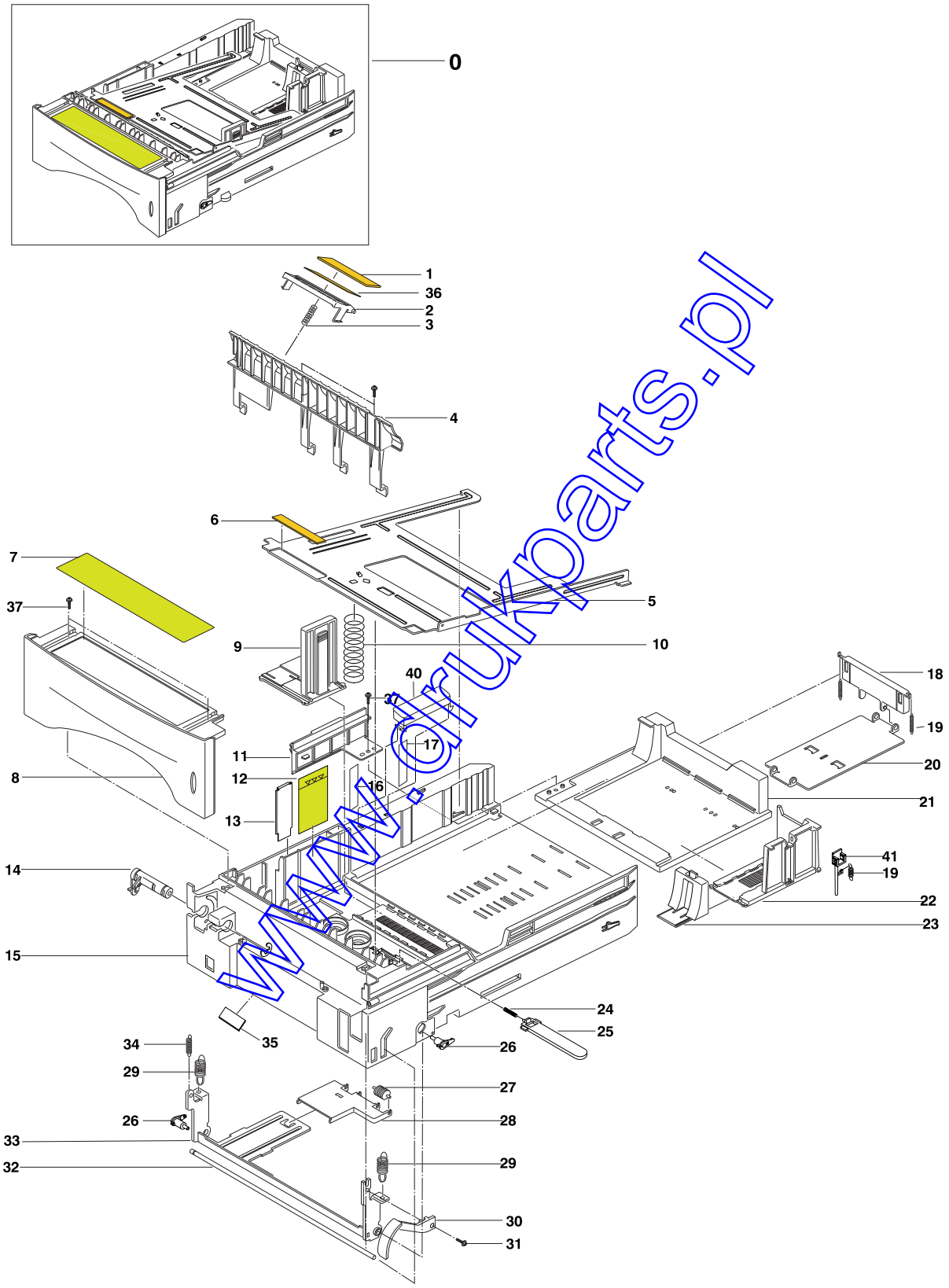

www.drukparts.pl

Second Cassette Parts List (option)

Location No.	Description	Id. No.	Q'ty
0	MEA ETC-CAST SCF		1
1	RPR-PAD FRICTION		1
2	"PMO-FRAME PAD		1
3	SPRING-PAD		1
4	"PMO-GUIDE PAPER1		1
5	IPR-KNOCK UP(SCF)		1
6	RPR-CORK KNOCKUP		1
7	LABEL(R)-INSTRUCT S,SEC		1
8	PMO-SUB GUIDE CASSETTE		1
9	PMO-GUIDE-SIDE		1
10	SPRING-SCF LEVER		1
11	PMO-DETECT PANEL		1
12	LABEL(R)-HEIGHT NEC		1
13	IPR-PLATE PAPER		1
14	PMO-LINK LEVER		1
15	PMO-CASSETTE SCF		1
16	PCT-FILM GUIDE SIZE1		1
17	PCT-FILM GUIDE SIZE2		1
18	PMO-LEVER REAR		1
19	SPRING-IDLE,SCF		3
20	IPR-PLATE LEVER		1
21	PMO-GUIDE REAR1		1
22	PMO-GUIDE REAR2		1
23	PMO-GUIDE REAR3		1
24	SPRING-LOCKER,PLATE		1
25	PMO-LOCKER PLATE		1
26	PMO-BUSH K/UP		2
27	PMO-ROLLER FD R		1
28	PMO-CAP PLATE K/UP		1
29	SPRING-SUB PLATE		2
30	PMO-LEVER PAPER S		1
31	SCREW-MACHINE		1
32	IPR-SHAFT KNOCK UP		1
33	IPR-PLATE SUB K/UP		1
34	SPRING-SCF LEVER		1
35	RING-E		1
36	RPR-PAD GUIDE P/U		
37	SCREW-TAPTITE		6
38	PMO-HOLDER SHAFT		1
39	PCT-GUIDE PAPER FILM		1
40	PMO-DUMMY ENV		1
41	PMO-GUIDE LOCK		1

www.drukparts.pl