SAMSUNG

Parts Catalog - ML-2855ND

www.drukparts.pl

Smallest Duplex Built-in Mono Laser Printer (Low Noise)

- 28ppm(A4) / 30ppm(Ltr)
- PCL6, PS3, 1,200x1,200dpi
- 400MHz processor
- USB 2.0, N/W
- 64MB (Max.192MB)
- 2K Standard, 5K High Yield
- Paper Input: 250sh CST + 50sh MP
- Standard Duplex Printing
- Options: 250sh SCF

This Parts Catalog is a property of Samsung Electronics Co.,Ltd.
Any unauthorized use of this manual can be punished under
applicable International and/or domestic law.

www.drukparts.pl

ExplodedView and Parts List

Contents

Power Cord 2
Thumbnail 3
1. Main 4
2. Top Cover 6
3. Cover Ass'y 8
4. Front Cover 10
5. Rear Cover 12
6. Frame 14
7. Main Drive 18
8. Rear Guide 20
9. Fuser 22
10. Duplex Unit 24
11. Cassette 26
12. SCF 28

www.drukparts.pl

Power Cord

Power Cord differs by countries. Please check your country code.

Top View	Side View	Part Code / Usable Country Code
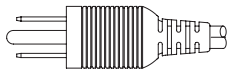	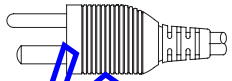	3903-000020 XAZ
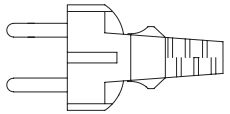	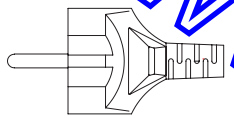	3903-000042 BEE / STS / XSA / XSG XSG / XEV / YEG
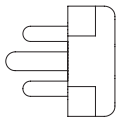	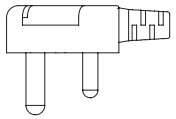	3903-000050 XFA / XIP
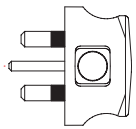	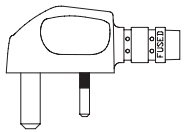	3903-000067 XEU / XSS
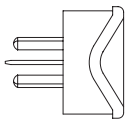	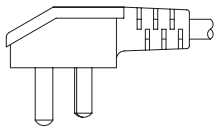	3903-000082 XIL

Top View	Side View	Part Code / Usable Country Code
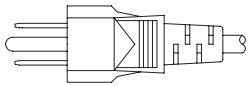	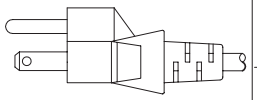	3903-000085 XAA / XAX
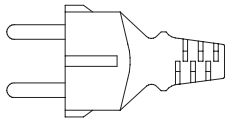	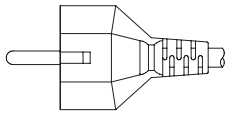	3903-000133 KOR
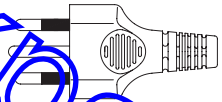	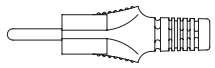	3903-000146 XBH
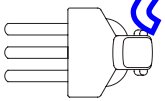	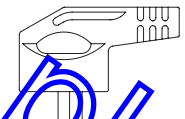	3903-000182 ETS
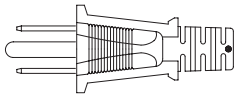	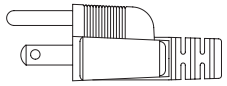	3903-000227 TED

www.orukparts.pl

Thumbnail

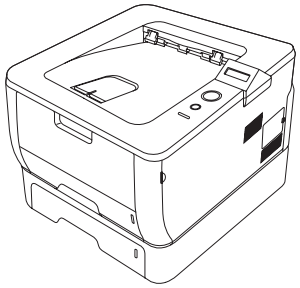	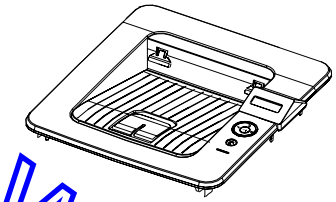	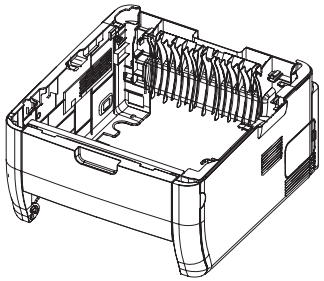	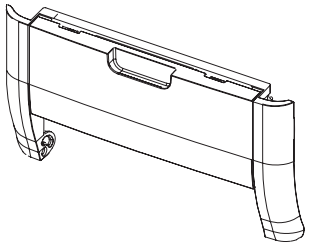	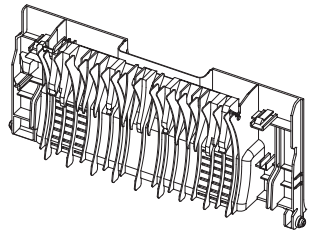
1. Main	2. Top Cover	3. Cover Ass'y	4. Front Cover	5. Rear Cover
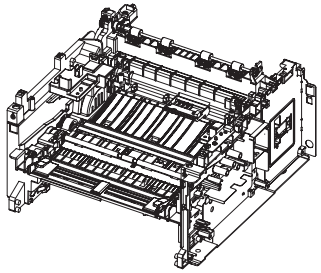	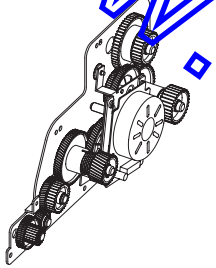	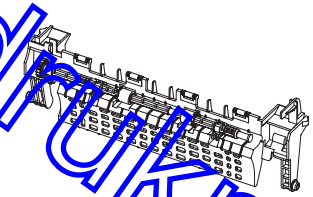	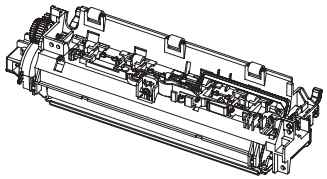	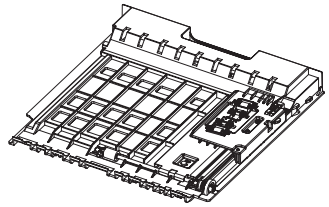
6. Frame	7. Main Drive	8. Rear Guide	9. Fuser	10. Duplex Unit
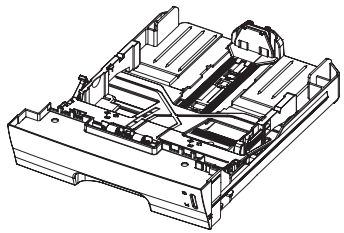	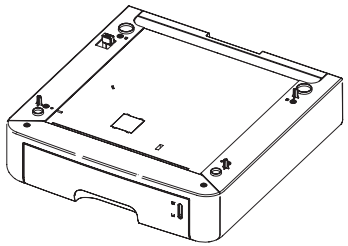			
11. Cassette	12. SCF			

www.drukparts.pl

1. Main

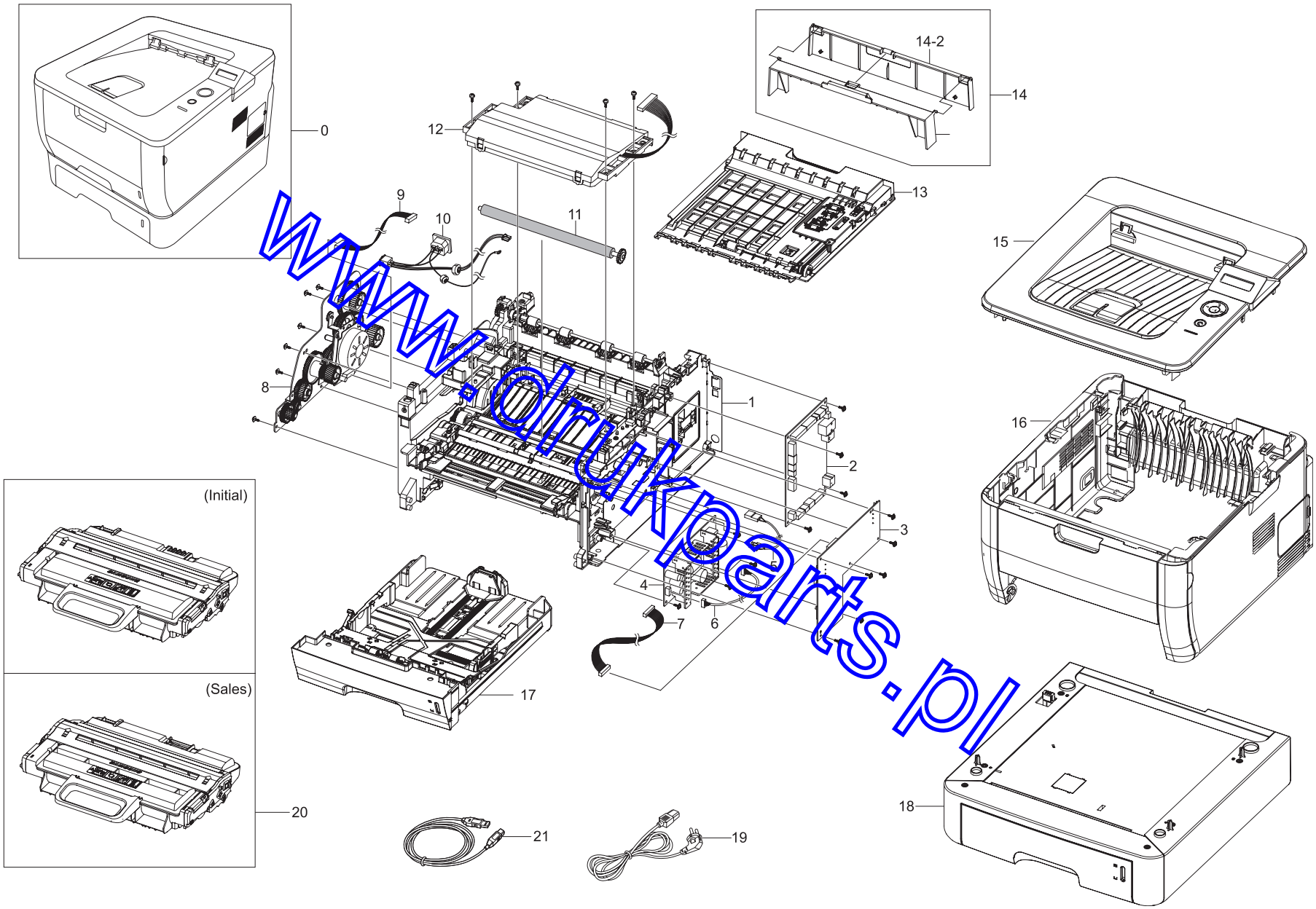

www.oficjalne.pl

Main Parts List

SA : SERVICE AVAILABLE, SNA : SERVICE not AVAILABLE

Drawer#	SEC_Code	Description	QT'y	Service	Remark
0	ML-2855ND	SET			
1	JC96-05406A	ELA HOU-FRAME	1	SNA	110V
1	JC96-05407B	ELA HOU-FRAME	1	SNA	220V
2	JC92-02101A	PBA-MAIN	1	SA	XAA
2	JC92-02101B	PBA-MAIN	1	SA	SEE
2	JC92-02101D	PBA-MAIN	1	SA	XEV
2	JC92-02101F	PBA-MAIN	1	SA	ETS
2	JC92-02101G	PBA-MAIN	1	SA	XSA, XSG, XSS
2	JC92-02125A	PBA-MAIN		SA	XAX
3	JC44-00156A	HVPS	1	SA	
4	JC44-00095B	SMPS-PSP_TYPE2_V1	1	SA	110V
4	JC44-00096B	SMPS-PSP_TYPE2_V2C	1	SA	220V
5	JC39-00818A	CBF HARNESS-FUSER AC	1	SA	
6	JC39-00828A	CABLE FORM CONN COAX	1	SNA	
7	JC39-00824A	CBF HARNESS-HVPS	1	SNA	
8	JC96-04731A	ELA UNIT-RX DRIVE	1	SA	

Drawer#	SEC_Code	Description	QT'y	Service	Remark
9	JC39-00820A	CBF HARNESS-MOTOR & SOLENOID	1	SA	
10	JC39-00816A	CBF HARNESS-AC-INLET	1	SNA	
11	JC66-01218A	ROLLER-TRANSFER	1	SA	
12	JC96-04733A	ELA UNIT-LSU	1	SA	
13	JC96-04736A	ELA UNIT-DUPLEX	1	SA	
14	JC97-03160A	MEA UNIT-COVER_DUPLEX	1	SA	
14-1	JC63-01650A	COVER-DUPLEX	1	SA	
14-2	JC63-01651A	COVER-REAR DUPLEX	1	SA	
15	JC97-03506A	MEA UNIT-COVER_TOP	1	SA	
16	JC96-05405A	ELA HOU COVER	1	SNA	
17	JC97-03510A	MEA UNIT-CASSETTE	1	SA	
18	JC96-04735A	ELA UNIT-SCF	1	SNA	
19	-	CBF-POWER CORD	1	SA	Refer to Power Code
20	JC96-04823F	CARTRIDGE-TONER	1	SNA	
21	JC39-00001A	CBF INTERFACE-USB	1	SA	

※ CBF INTERFACE-USB is provided for some country only.
- JC39-00001A (CBF INTERFACE-USB) : ETS

www.drukparts.pl

2. Top Cover

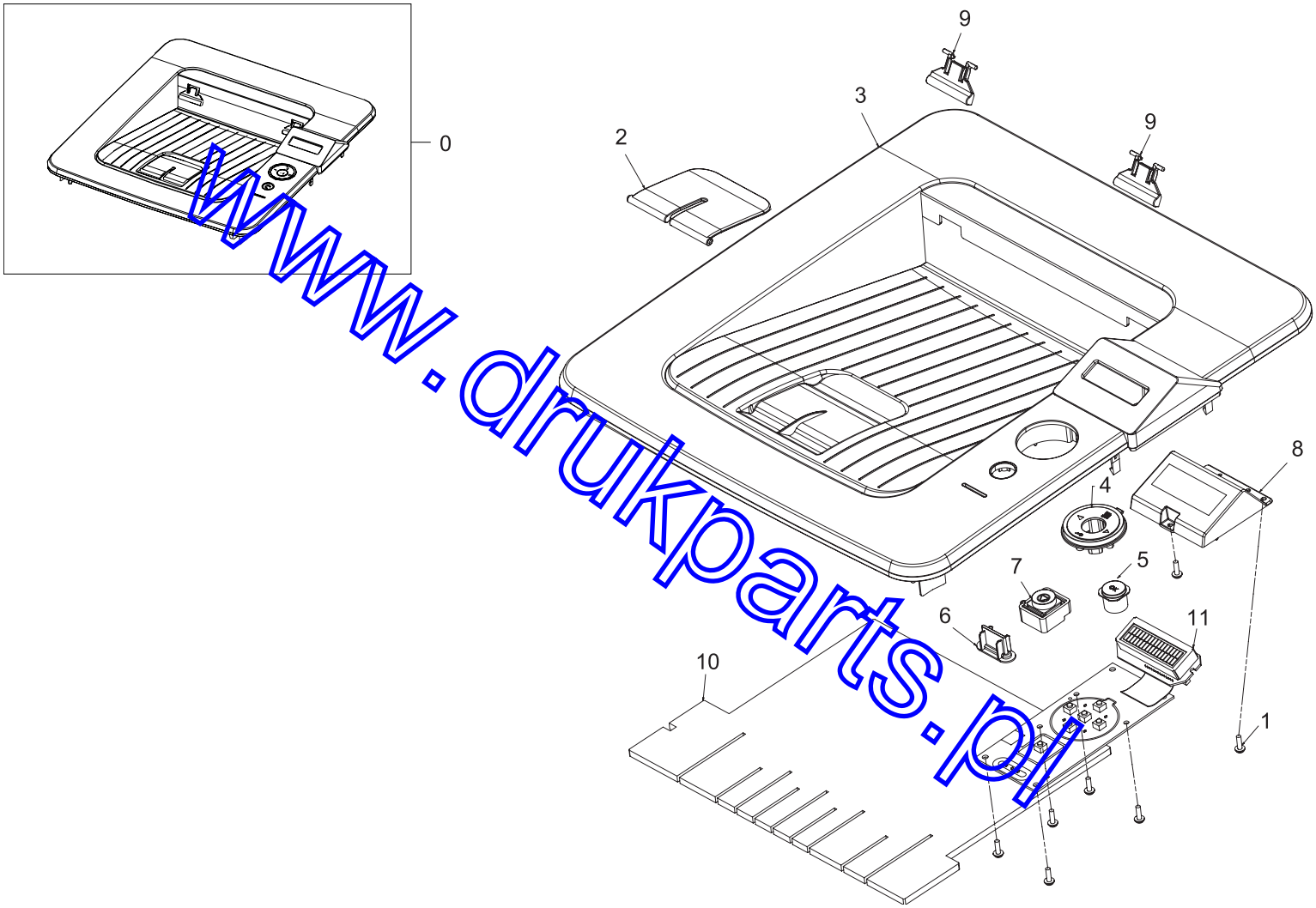

www.drukparts.pl

Top Cover Parts List

SA : SERVICE AVAILABLE, SNA : SERVICE not AVAILABLE

Drawer#	SEC_Code	Description	QT'y	Service	Remark
0	JC97-03506A	MEA UNIT-COVER_TOP	1	SA	
1	6003-000196	SCREW-TAPTITE	7	SA	
2	JC61-02230A	STACKER-RX	1	SA	
3	JC63-02101A	COVER-TOP	1	SNA	
4	JC64-00388A	KEY-MENU	1	SNA	
5	JC64-00389A	KEY-OK	1	SNA	

Drawer#	SEC_Code	Description	QT'y	Service	Remark
6	JC64-00392A	KEY-STATUS	1	SNA	
7	JC64-00393A	KEY-STOP	1	SNA	
8	JC67-00345A	CAP-WINDOW_LCD	1	SNA	
9	JC72-01343A	PMO-SUB_M_STACKER	2	SA	
10	JC72-01528A	SPONGE-COVER_TOP_MP	1	SNA	
11	JC92-02102A	PBA SUB-OPE	1	SA	

www.drukparts.pl

3. Cover Ass'y

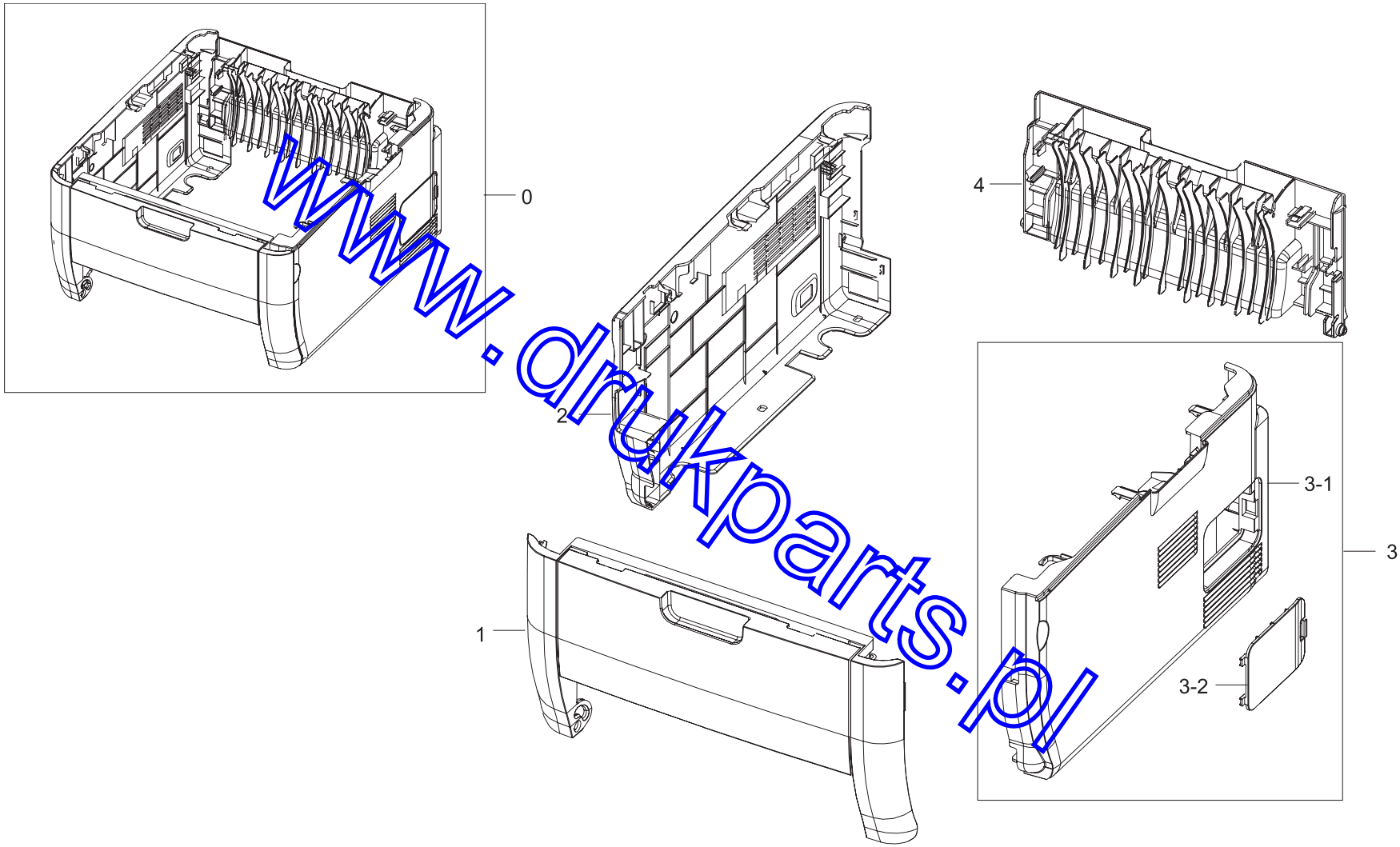

www.drukparts.pl

Cover Ass'y Parts List

SA : SERVICE AVAILABLE, SNA : SERVICE not AVAILABLE

Drawer#	SEC_Code	Description	QT'y	Service	Remark
0	JC96-05405A	ELA HOU-COVER	1	SNA	
1	JC97-03509A	MEA UNIT-COVER_FRONT	1	SA	
2	JC97-03505A	MEA UNIT-COVER_LEFT	1	SA	
3	JC97-03508A	MEA UNIT-COVER_RIGHT	1	SA	
3-1	JC63-02097A	COVER-RIGHT	1	SNA	
3-2	JC63-01570A	COVER-RIGHT_DIMM	1	SA	
4	JC97-03015A	MEA UNIT-COVER_REAR	1	SA	

www.drukparts.pl

4. Front Cover

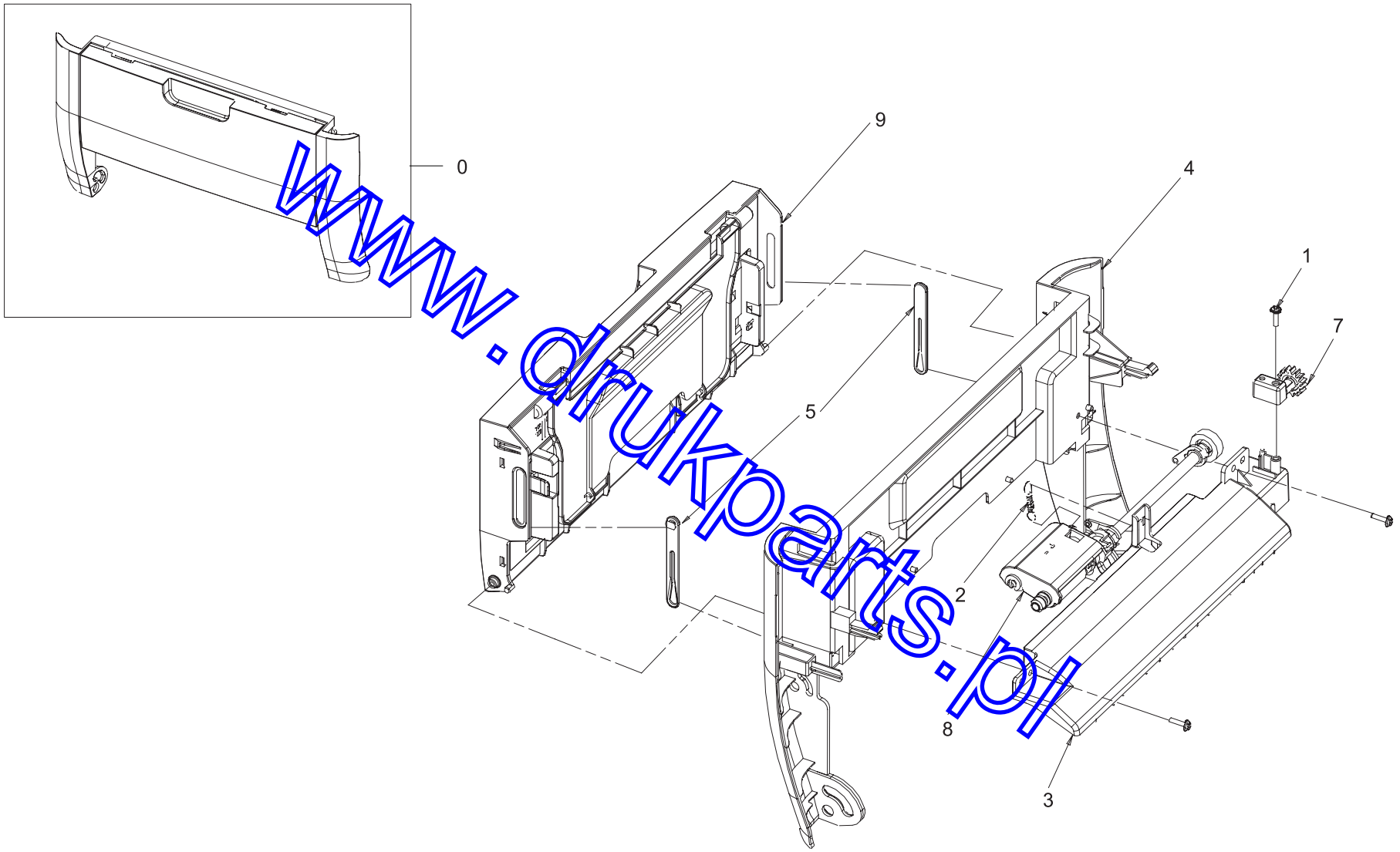

www.drukparts.pl

Front Cover Parts List

SA : SERVICE AVAILABLE, SNA : SERVICE not AVAILABLE

Drawer#	SEC_Code	Description	QT'y	Service	Remark
0	JC97-03509A	MEA-COVER_FRONT	1	SA	
1	6003-000196	SCREW-TAPTITE	3	SA	
2	6107-001548	SPRING-ES	1	SA	
3	JC61-02810A	GUIDE-UPPER_MP	1	SNA	
4	JC63-02099A	COVER-FRONT	1	SNA	

Drawer#	SEC_Code	Description	QT'y	Service	Remark
5	JC66-02086A	LINK-COVER_MP	2	SNA	
6	JC72-01444A	SPONGE-GUIDE CHANGE DUP	1	SNA	
7	JC97-03498A	MEA UNIT-PICKUP_IDLE	1	SNA	
8	JC97-03499A	MEA UNIT-PICKUP_MP	1	SA	
9	JC97-03503A	MEA UNIT-TRAY_MP	1	SNA	

www.drukparts.pl

5. Rear Cover

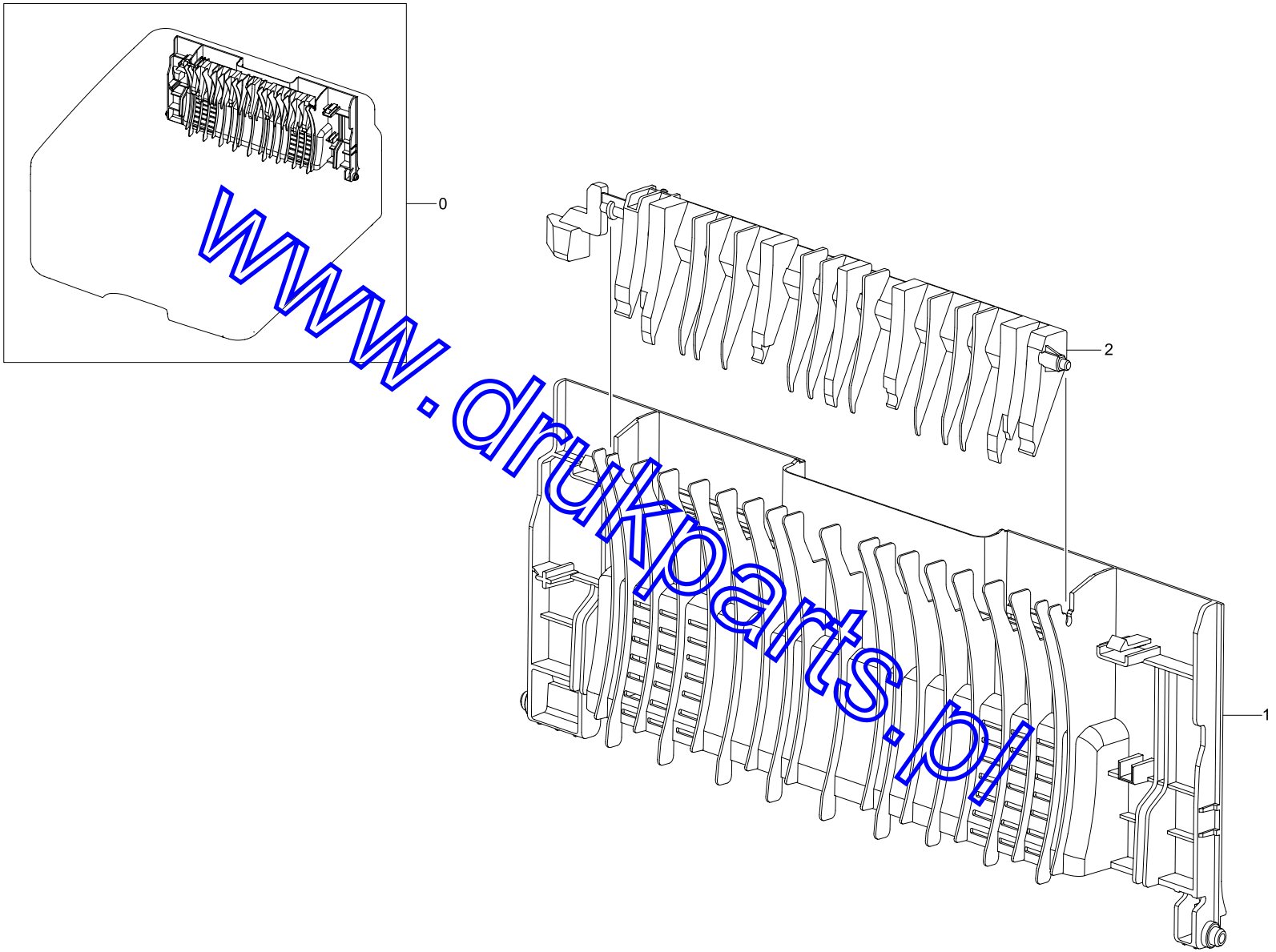

www.drukparts.pl

Rear Cover Parts List

SA : SERVICE AVAILABLE, SNA : SERVICE not AVAILABLE

Drawer#	SEC_Code	Description	QT'y	Service	Remark
0	JC97-03015A	MEA UNIT-COVER_REAR	1	SA	
1	JC63-01526A	COVER-REAR	1	SA	

Drawer#	SEC_Code	Description	QT'y	Service	Remark
2	JC61-02399A	GUIDE-CHANGE_DUP	1	SNA	

www.drukparts.pl

6. Frame 1

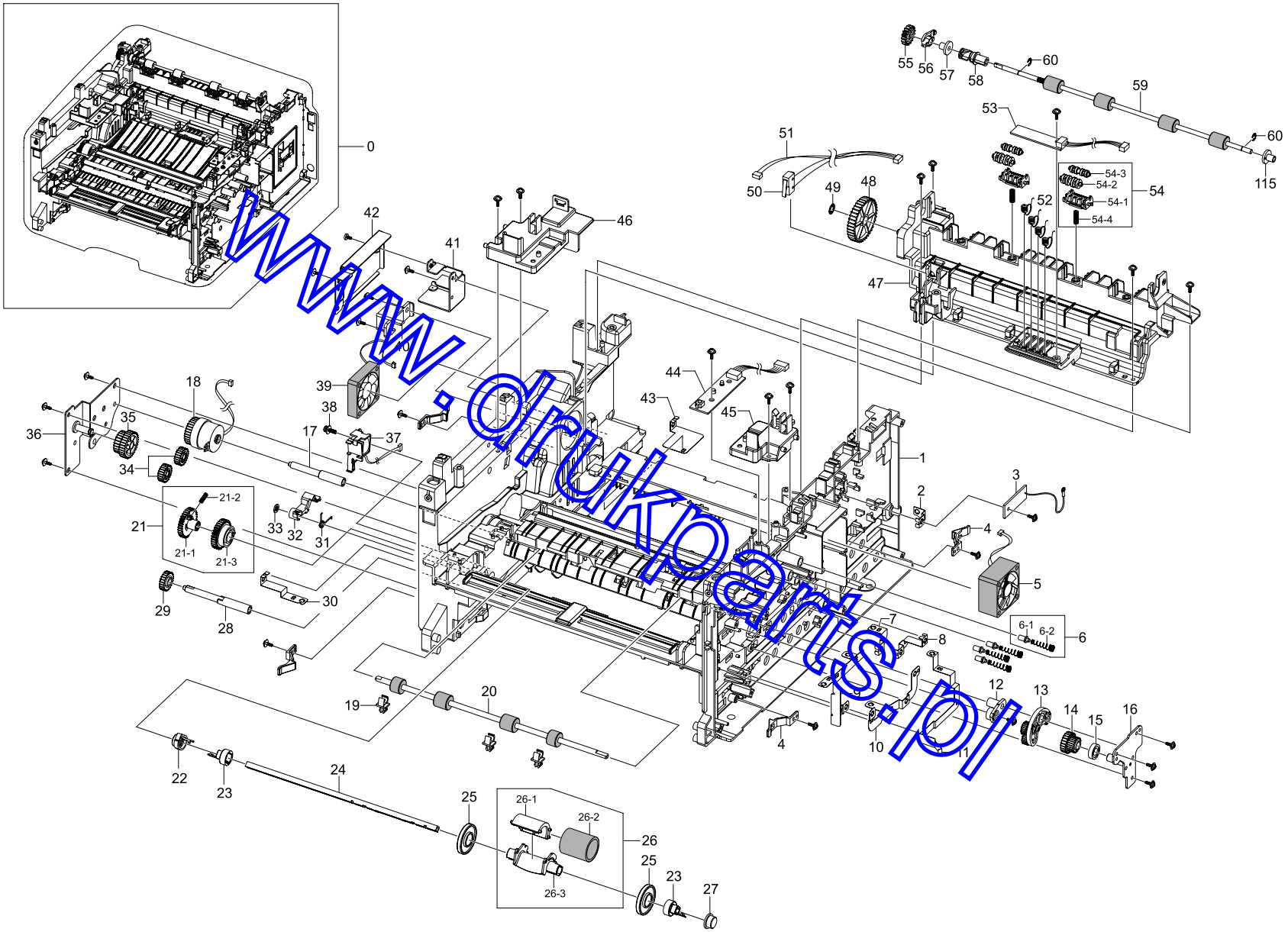

www.drukparts.pl

Frame 2

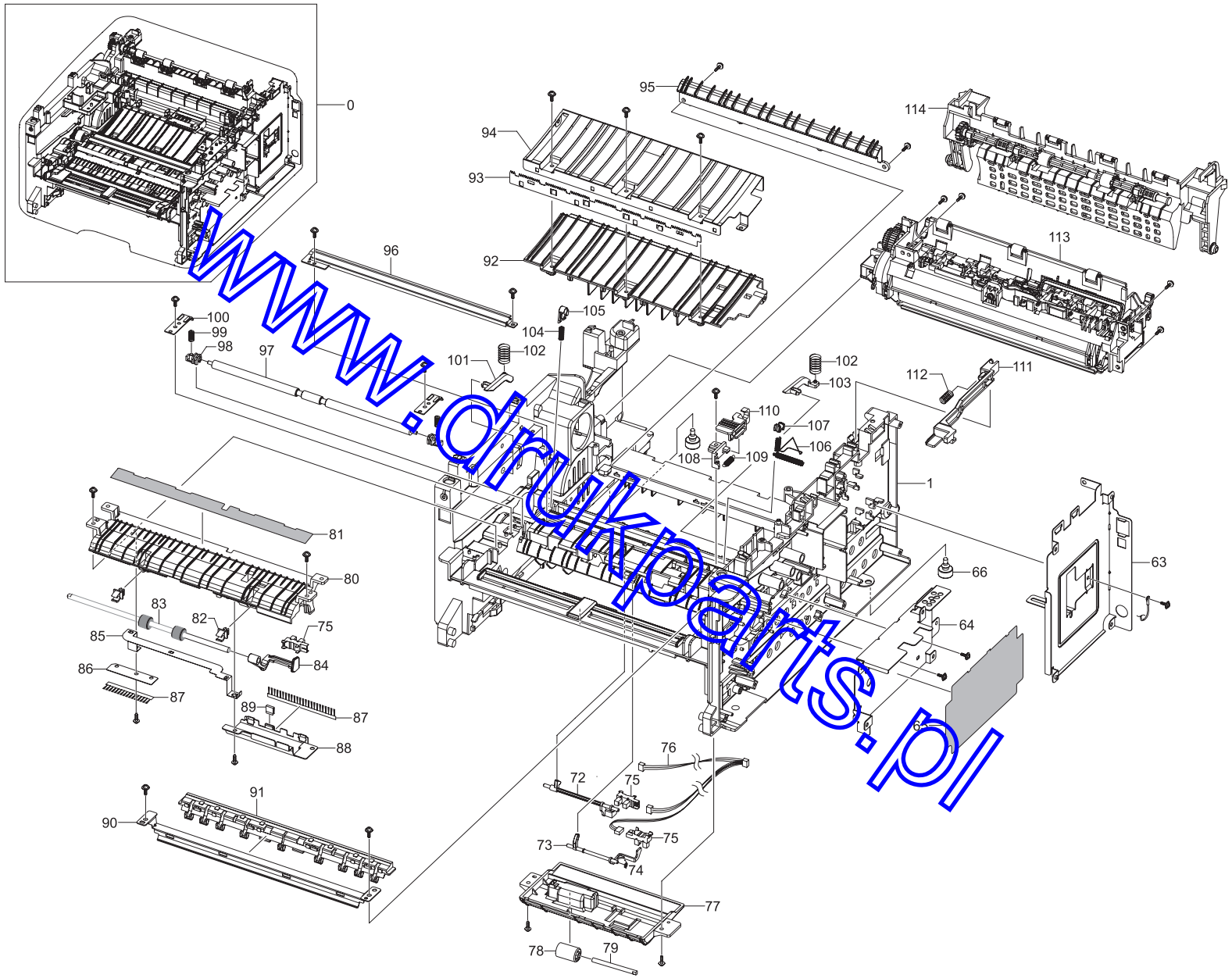

www.drukparts.pl

Frame Parts List

SA : SERVICE AVAILABLE, SNA : SERVICE not AVAILABLE

Drawer#	SEC_Code	Description	QT'y	Service	Remark
0	JC96-05406A	ELA HOU-FRAME	1	SNA	110V
0	JC96-05407B	ELA HOU-FRAME	1	SNA	220V
1	JC61-02822A	FRAME-BASE	1	SNA	
2	JC63-01616A	GROUND-ZENOR	1	SNA	
3	JC92-01488B	PBA MAIN-ZENER	1	SA	
4	JC72-00983A	PMO-LOCKER CST	4	SA	
5	JC31-00085A	FAN-DC	1	SA	
6-1	JC70-40912A	ICT SHAFT HV LARGE	4	SNA	
6-2	JC61-00031A	SPRING ETC-HV LARGE	4	SNA	
7	JC63-01619A	GROUND-MOTOR_MAIN	1	SNA	
8	JC63-01618A	GROUND-CONTROLLER	1	SNA	
9	JC63-01620A	GROUND-PAPER	1	SNA	
10	JC63-01613A	GROUND-BRKT FRONT	1	SNA	
11	JC63-01621A	GROUND-TRANSFER	1	SNA	
12	JC61-02233A	HOLDER-REGI	1	SA	
13	JC96-04732A	MEA UNIT SWING	1	SA	
14	JC66-01651A	GEAR DUPLEX RDCN	1	SA	
15	JC61-02220A	COLLAR SWING	1	SA	
16	JC61-02225A	BRKT SWING	1	SNA	
17	JC66-01655A	SHAFT-FEED REGI	1	SA	
18	JC66-01865A	CLUTCH ELECTRIC	1	SA	
19	JC72-00382B	PMO-BUSHING FEED	5	SA	
20	JC66-01656A	ROLLER-FEED REGI	1	SA	
21	JC97-03141A	MEA UNIT-GEAR PICK UP	1	SA	
21-1	JC72-00979A	GEAR PICK UP A	1	SA	
21-2	6107-001167	SPRING-CS	1	SA	
21-3	JC72-00980A	GEAR PICKUP B	1	SA	
22	JC66-01889A	CAM-PICK UP	1	SA	
23	JC72-00982A	PMO-IDLE PICK_UP	2	SA	
24	JC66-01692A	SHAFT-P-PICK_UP	1	SA	
25	JC61-00915A	STOPPER-M-PICK UP_R2	2	SA	

Drawer#	SEC_Code	Description	QT'y	Service	Remark
26	JC97-03062A	MEA UNIT-PICK UP	1	SA	
26-1	JC73-00265A	RUBBER PICK_UP	1	SA	
26-2	JC61-00910A	HOUSING-M-PICK UP	1	SA	
26-3	JC61-00909A	HOUSING-M-PICK UP_R2	1	SA	
27	JC61-00587A	BUSH-M-PICK_UP R2	1	SA	
28	JC66-01660A	SHAFT-FEED	1	SA	
29	JC66-01634A	GEAR-FEED DR 16	1	SA	
30	JC63-01614A	GROUND-GUIDE TR	1	SNA	
31	6107-001352	SPRING-TS	1	SA	
32	JC66-00377A	CAM-M-PICK_UP	1	SA	
33	6044-000001	RING-CS;ID3,OD3,T0.25,BLACK,SU	1	SNA	
34	JC66-40964A	GEAR-EXIT,IDLE(Z17)	2	SA	
35	JC66-01627A	GEAR-FEED RDCN 24/19	1	SA	
36	JC61-02226A	BRACKET-FEED	1	SNA	
37	JC33-00026A	SOLENOID PCIKUP	1	SA	
38	6003-000301	SCREW-TAPTITE	1	SNA	
39	JC31-00085A	FAN-DC	1	SA	
40	JC61-02232A	HOLDER-POWER	1	SNA	
41	JC63-01571A	SHIELD-POWER_SWITCH	1	SNA	
42	JC61-02235A	PLATE-POWER CAP	1	SNA	
43	JC63-01615A	GROUND-SCF	1	SNA	
45	JC61-02312A	FRAME-LSU-HOLDER-R	1	SNA	
46	JC61-02311A	FRAME-LSU-HOLDER_L	1	SNA	
47	JC61-02310A	FRAME-EXIT_HIGH	1	SA	
48	JC66-00875A	GEAR-M-FUSER IDLE 1	1	SA	
49	6044-001005	RING-CS	1	SA	
50	JC39-00826A	CBF HARNESS-LSU SW&FAN	1	SNA	
52	JC65-00019A	TERMINAL-CRUM	4	SA	
53	JC92-01829B	PBA SUB-TERMINAL	1	SA	
54-1	JC61-01172A	HOLDER-M-EXIT F/DOWN	2	SNA	
54-2	JC66-00824A	ROLLER-EXIT MAIN	2	SA	

www.drukparts.pl

Frame Parts List

SA : SERVICE AVAILABLE, SNA : SERVICE not AVAILABLE

Drawer#	SEC_Code	Description	QT'y	Service	Remark
54-3	JC66-00830A	ROLLER-EXIT FR	2	SA	
54-4	6107-001163	SPRING CS	2	SA	
55	JC66-40209B	GEAR-M-EXIT	1	SNA	
56	JC72-41191B	PMO-BEARING SHAFT	2	SA	
57	JC61-02308A	SUPPORT-ROLLER	1	SA	
59	JC66-01662A	ROLLER-EXIT F/DOWN	1	SA	
63	JC63-01572A	SHIELD-CONTROLLER	1	SNA	
64	JC63-01573A	SHIELD-SMPS	1	SNA	
65	JC62-00461A	INSULATION-SMPS	1	SNA	
66	JC61-40001A	FOOT-ML80	2	SA	
72	JC66-01647A	ACTUATOR-FEED	1	SA	
73	JC66-01646A	ACTUATOR-DUPLEX	1	SA	
74	6107-001164	SPRING-TS	2	SA	
75	0604-001095	PHOTO INTERRRUPTER	3	SA	
76	JC39-00824A	CBF HARNESS-HVPS	1	SNA	
77	JC61-02752A	FRAME-DUPLEX PATH_EX	1	SA	
78	JC66-01022A	ROLLER-M-IDLE SCF	1	SNA	
79	JC66-01846A	SHAFT-DUP_ROLLER	1	SA	
80	JC61-02303A	GUIDE-FRAME_DUPLEX	1	SA	
81	JC63-01743A	SHEET-GUIDE_DUP_PATH	1	SA	
82	JC72-00382B	PMO-BUSHING FEED	5	SA	
83	JC66-00598A	ROLLER-FEED	1	SA	
84	JC66-01648A	ACTUATOR-EMPTY	1	SA	
85	JC63-01617A	GROUND-PICK_UP	1	SA	
86	JC63-00527A	SHEET-BRUSH	1	SA	
87	JC75-00095A	MEC-BRUSH PICK UP	1	SA	
88	JC61-02268A	BRACKET-COVER FRONT	1	SNA	

Drawer#	SEC_Code	Description	QT'y	Service	Remark
89	JC63-01676A	GROUND-BRUSH PICK UP	1	SNA	
90	JC61-02306A	GUIDE-PAPER	1	SNA	
91	JC61-02400A	GUIDE FRONT PAPER	1	SA	
92	JC61-02305A	GUIDE-TR_RIB	1	SA	
93	JC61-00604A	PLATE-E_SAW	1	SA	
94	JC61-02307A	GUIDE-TR	1	SA	
95	JC61-02196A	GUIDE-INPUT	1	SA	
96	JC61-02236A	PLATE EARTH TRANSFER	1	SA	
97	JC66-01654A	SHAFT-FEED IDLE	1	SA	
98	JC61-00585A	BUSH-M-FEED IDLE	2	SA	
99	JC61-70958A	SPRING ETC-TR	2	SA	
100	JC61-00914A	PLATE-P-PUSH BUSHING	2	SA	
101	JC72-00984A	PMO-PLATE GUIDE DEVE_L	1	SA	
102	JC61-70932A	SPRING ETC-GUIDE DEVE	2	SA	
103	JC72-00985A	PMO-PLATE GUIDE DEVE_R	1	SA	
104	6107-001370	SPRING TR	1	SA	
105	JC61-02468A	BUSH-TR_L	1	SA	
106	JC65-00033A	TERMINAL SPRING TR	1	SA	
107	JC61-00588A	PMO-BUSHING_TR(L)	1	SA	
108	JC61-02304A	GUIDE-HOLDER_TR	1	SNA	
109	JC61-00053A	SPRING ETC-ES (Guide holder TR)	1	SNA	
110	JC61-02283A	HOLDER-TRANSFER	1	SA	
111	JC66-01649A	LINK-COVER REAR	1	SA	
112	6107-001163	SPRING-CS	1	SA	
114	JC97-03067A	MEA UNIT-GUIDE REAR	1	SA	
115	JC61-00424A	BUSH-4	1	SA	
115	JC61-00424A	BUSH-4	1	SNA	

www.druk-parts.pl

7. Main Drive

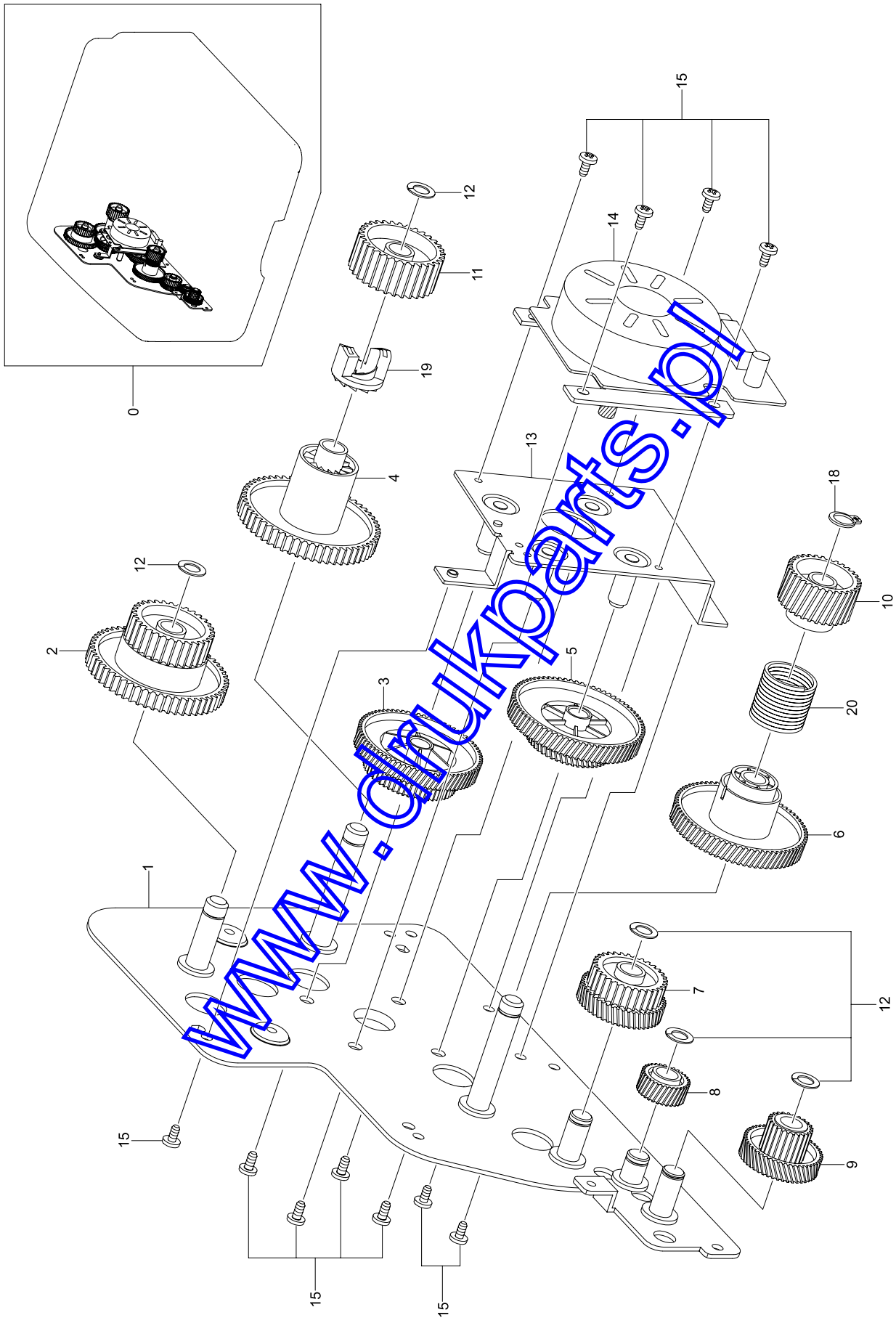

www.qrukparts.pl

Main Drive Parts List

SA : SERVICE AVAILABLE, SNA : SERVICE not AVAILABLE

Drawer#	SEC_Code	Description	QT'y	Service	Remark
0	JC96-04731A	ELA UNIT-DRIVE	1	SA	
1	JC61-02195A	BRACKET-GEAR	1	SNA	
2	JC66-01641A	GEAR-EXIT RDCN 61/28	1	SA	
3	JC66-01628A	GEAR-RDCN 83/40	1	SA	
4	JC66-01632A	GEAR-FUSER DR IN 61	1	SA	
5	JC66-01626A	GEAR-RDCN 80/55	1	SA	
6	JC66-01633A	GEAR-OPC DR IN 39	1	SA	
7	JC66-01625A	GEAR-FEED RDCN 56/26	1	SA	
8	JC66-01640A	GEAR-PICKUP IDLE 31	1	SA	
9	JC66-01650A	GEAR-RDCN 52/18	1	SA	

Drawer#	SEC_Code	Description	QT'y	Service	Remark
10	JC66-01798A	GEAR-OPC CLUTCH 29	1	SA	
11	JC66-01637A	GEAR-FUSER DR OUT 37	1	SA	
12	6031-000023	WASHER-PLAIN	5	SA	
13	JC61-02227A	BRACKET-MOTOR	1	SNA	
14	JC31-00090A	MOTOR BLDC	1	SA	
15	6003-000269	SCREW-TAPTITE	11	SA	
18	6044-001130	RING-C	1	SNA	
19	JC66-00340A	GEAR-HUB CLUTCH	1	SA	
20	6107-001372	SPRING CLUTCH	1	SNA	

www.drukparts.pl

8. Rear Guide

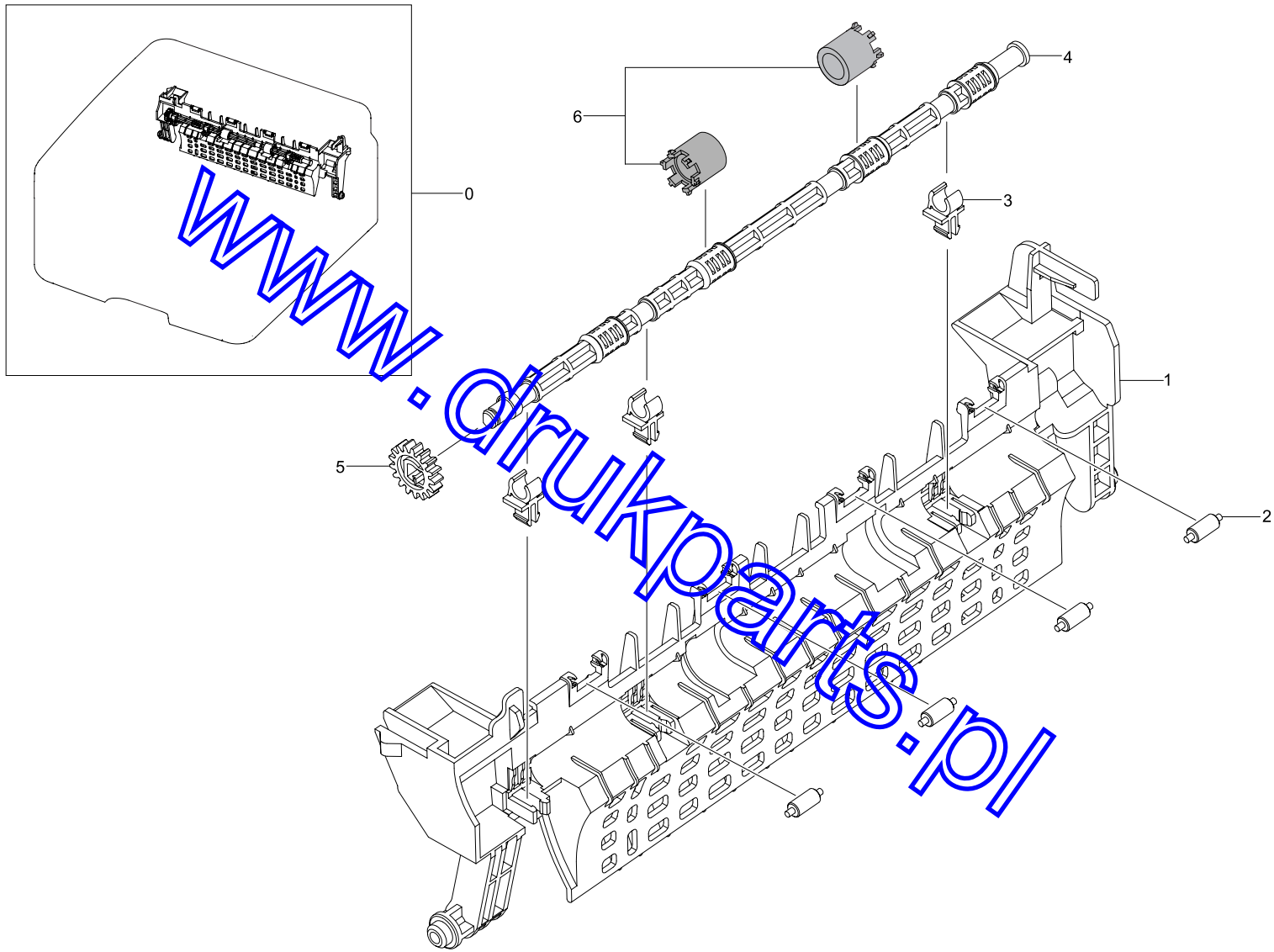

www.drukparts.pl

Rear Guide Parts List

SA : SERVICE AVAILABLE, SNA : SERVICE not AVAILABLE

Drawer#	SEC_Code	Description	QT'y	Service	Remark
0	JC97-03067A	MEA UNIT-GUIDE REAR	1	SA	
1	JC61-02198A	GUIDE-REAR	1	SNA	
2	JC66-01661A	ROLLER-IDLE_EXIT	4	SNA	
3	JC61-02158A	BUSH-TX	3	SNA	

Drawer#	SEC_Code	Description	QT'y	Service	Remark
4	JC66-01584A	SHAFT-EXIT_F/UP	1	SNA	
5	JC66-01583A	GEAR-EXIT	1	SA	
6	JC73-00259A	RUBBER-EXIT_F/UP	2	SNA	

www.drukparts.pl

9. Fuser

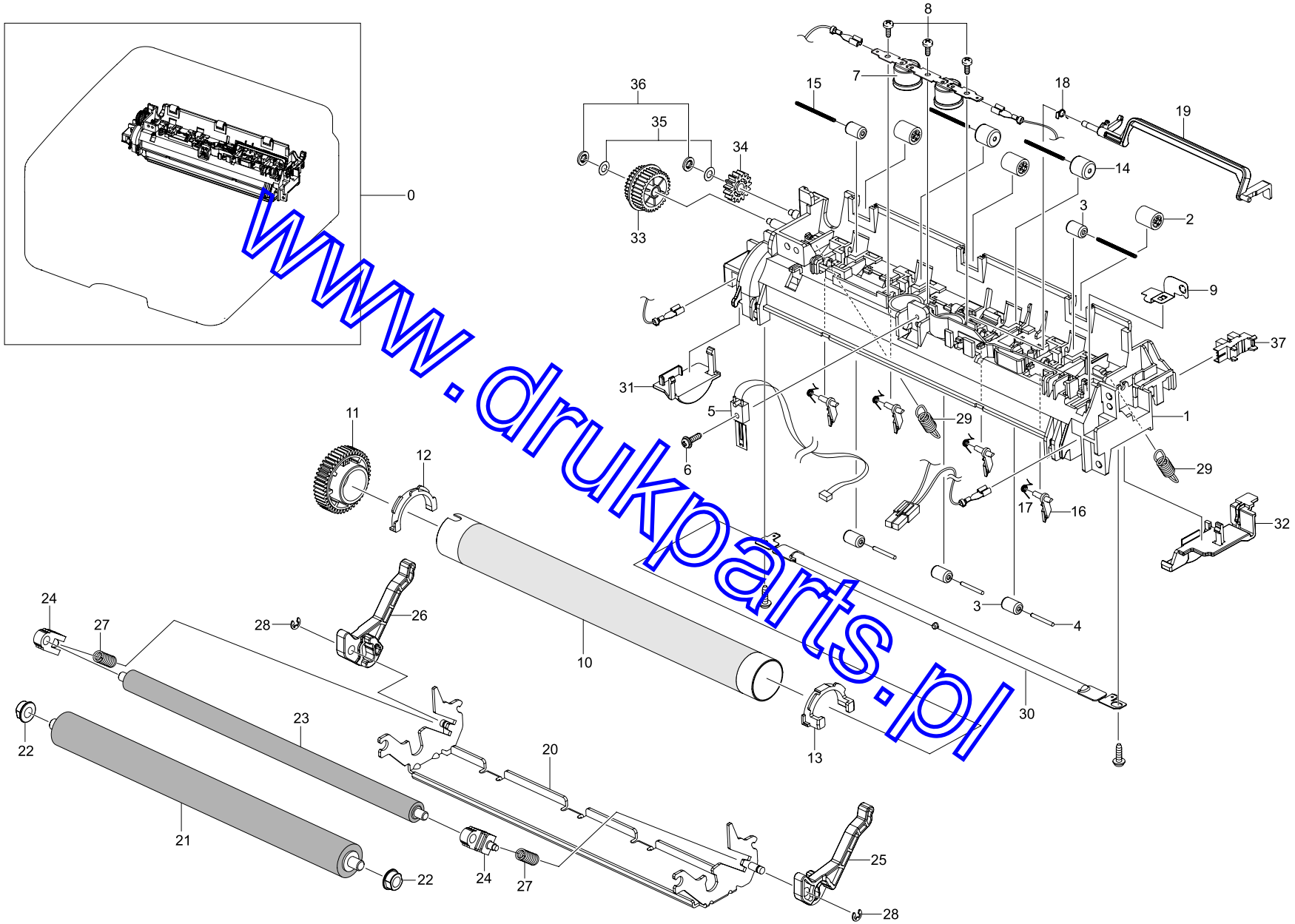

www.drukparts.pl

Fuser Parts List

SA : SERVICE AVAILABLE, SNA : SERVICE not AVAILABLE

Drawer#	SEC_Code	Description	QT'y	Service	Remark
0	JC96-04717A	ELA UNIT-FUSER	1	SA	220V
0	JC96-04718A	ELA UNIT-FUSER	1	SA	110V
1	JC63-01517A	COVER-FUSER	1	SNA	
2	JC72-40981A	PMO-ROLLER UPPER DP	3	SA	
3	JC66-01312A	ROLLER-IDLE	5	SA	
4	JC70-20901A	IEX-SHAFT IDLE,F/UP	3	SA	
5	1404-001438	THERMISTOR-NTC ASSY	1	SA	
6	6003-000196	SCREW-TAPTITE	1	SA	
7	4712-001031	THERMOSTAT	1	SA	
8	6003-000282	SCREW-TAPTITE	4	SNA	
9	JC63-01536A	GROUND-FUSER	1	SNA	
10	JC66-01256B	ROLLER-HEAT	1	SA	
11	JC66-01254A	GEAR-FUSER	1	SA	
12	JC61-02334A	BUSH-HR-L	1	SA	
13	JC61-02335A	BUSH-HR-R	1	SA	
14	JC72-20902A	PEX-ROLLER F/UP(2)	2	SA	
15	6107-001359	SPRING-ETC	4	SA	
16	JC61-02538A	GUIDE-CLAW	4	SNA	
17	JC61-01950A	SPRING ETC-CLAW	4	SA	
18	6107-001165	SPRING-TS	1	SA	

Drawer#	SEC_Code	Description	QT'y	Service	Remark
19	JC66-01595A	ACTUATOR-EXIT	1	SA	
20	JC61-02197A	FRAME-FUSER	1	SNA	
21	JC66-01663A	ROLLER-PRESSURE	1	SA	
22	JC61-02336A	BUSH-PR-1ST	2	SA	
23	JC66-01664A	ROLLER-PRESSURE_2ND	1	SA	
24	JC61-02337A	BUSH-PR-2ND	2	SA	
25	JC66-01598A	LEVER-LINK JAM_R	1	SNA	
26	JC66-01597A	LEVER-LINK JAM_L	1	SA	
27	6107-001246	SPRING-CS	2	SA	
28	6044-000159	RING-C	2	SA	
29	6107-001361	SPRING-ES	2	SA	
30	4713-001211	LAMP-HALOGEN	1	SA	110V
30	4713-001212	LAMP-HALOGEN	1	SA	220V
31	JC67-00266A	CAP-LAMP_L	1	SNA	
32	JC67-00267A	CAP-LAMP_R	1	SNA	
33	JC66-01638A	GEAR-FUSER RDCN 28-20	1	SA	
34	JC66-00056A	GEAR-MPF 5	1	SNA	
35	6001-001051	WASHER-PLAIN	2	SNA	
36	6044-000001	RING-CS	2	SNA	
37	0604-001065	PHOTO-INTERRUPTER	1	SA	

www.drukparts.pl

10. Duplex Unit

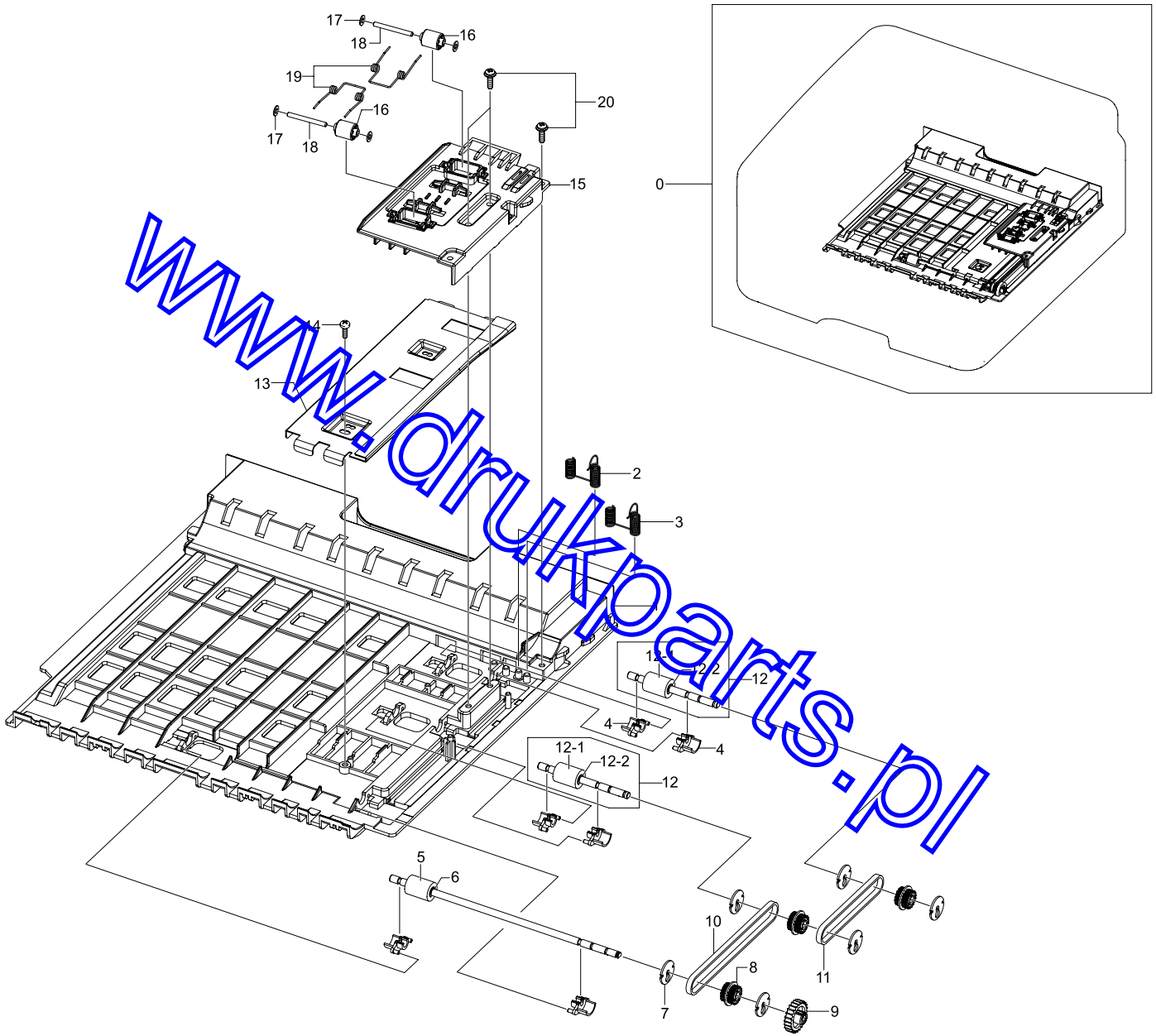

www.drukparts.pl

Duplex Unit Parts List

SA : SERVICE AVAILABLE, SNA : SERVICE not AVAILABLE

Drawer#	SEC_Code	Description	QT'y	Service	Remark
0	JC96-04736A	ELA UNIT-DUPLEX		SA	
1	JC61-02188A	FRAME-DUPLEX_BASE	1	SNA	
2	JC65-00036A	TERMINAL-GND_DUP L	1	SA	
3	JC65-00035A	TERMINAL-GND_DUP S	1	SA	
4	JC61-00665A	BUSH-M-FEED_DUP	6	SA	
5	JC66-01657A	ROLLER-FEED_DUP2	1	SNA	
6	6044-000107	RING-C	1	SNA	
7	JC66-00900A	PULLEY-M-18-DUMMY_DUP	6	SA	
8	JC66-00899A	PULLEY-18_DUP	3	SA	
9	JC66-00038A	GEAR-EXIT F/DOWN	1	SA	
10	6602-001589	BELT-TIMING GEAR	1	SA	
11	6602-001588	BELT-TIMING GEAR	1	SA	

Drawer#	SEC_Code	Description	QT'y	Service	Remark
12	JC96-04983A	ELA UNIT-ROLLER_DUP	2	SA	
12-1	JC66-00901A	ROLLER-FEED_DUP	1	SA	
12-2	6044-000107	RING-C	1	SNA	
13	JC61-02235A	BRACKET-DUPLEX_ALIGN	1	SA	
14	6002-000440	SCREW-TAPPING	1	SNA	
15	JC61-02314A	GUIDE-DUPLEX_UPPER	1	SA	
16	JC66-00896A	ROLLER-M-IDLE_ DUP	2	SA	
17	JK72-00058A	PCT-SILP WASHER	4	SNA	
18	JC66-00444A	SHAFT-IDLE ROLL, DUP	2	SA	
19	6107-001156	SPRING-TS	2	SA	
20	6003-000196	SCREW-TAPTITE	3	SA	

www.drukparts.pl

11. Cassette

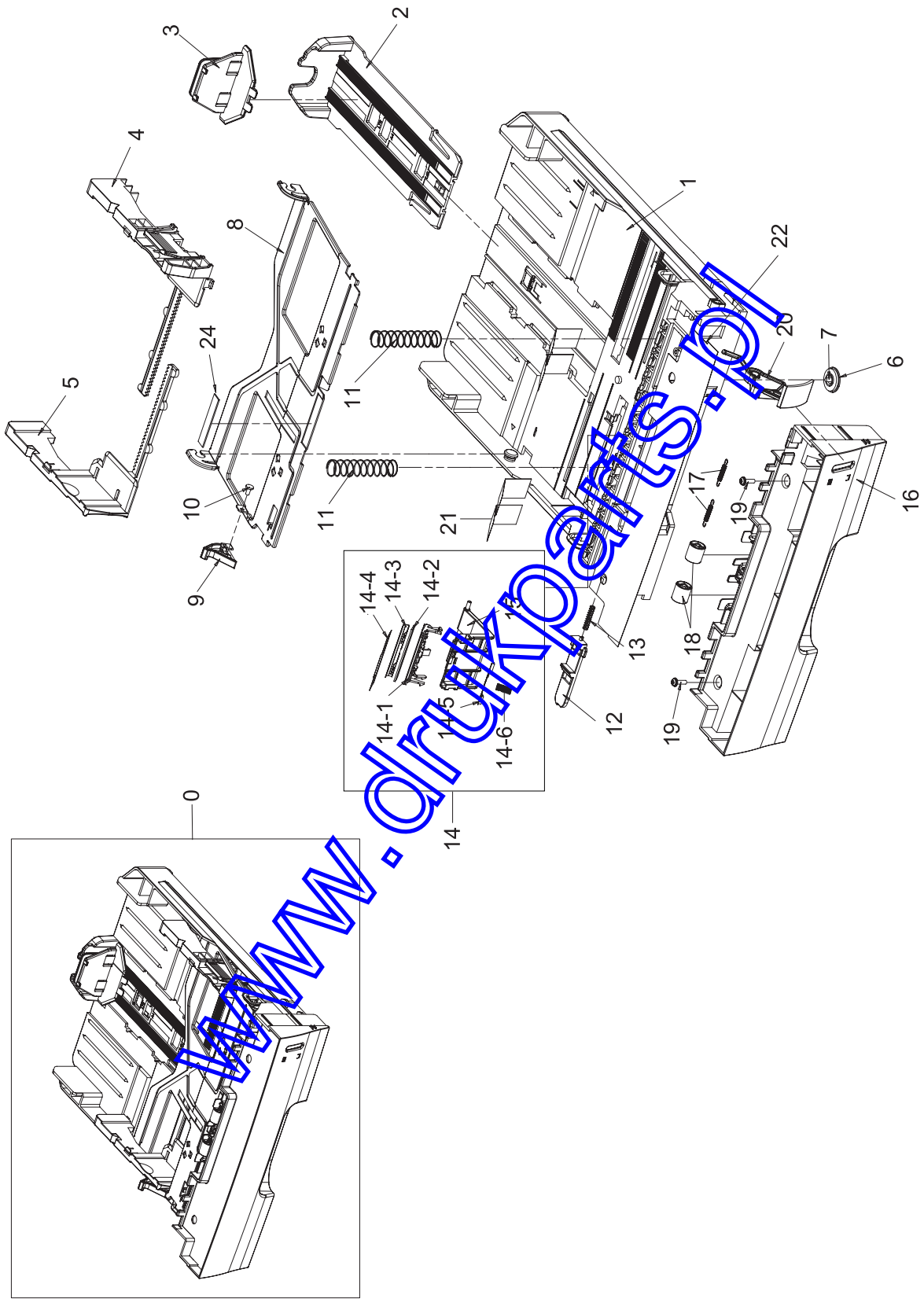

www.drukparts.pl

Cassette Parts List

SA : SERVICE AVAILABLE, SNA : SERVICE not AVAILABLE

Drawer#	SEC_Code	Description	QT'y	Service	Remark
0	JC97-03510A	MEA UNIT-CASSETTE	1	SA	
1	JC61-00876A	FRAME-M_CASSETTE	1	SNA	
2	JC61-00918B	GUIDE-M-EXTENSION L2	1	SA	
3	JC72-00971A	PMO-EXTENSION SMALL	1	SA	
4	JC70-00301A	ADJUST-M-CASSETTE_R	1	SA	
5	JC70-00300A	ADJUST-M-CASSETTE_L	1	SA	
6	JG66-40003A	GEAR-PINION	1	SA	
7	6003-000264	SCREW-TAPTITE	1	SNA	
8	JC61-00603A	PLATE-P-KNOCK_UP	1	SNA	
9	JC66-00719A	CAM-M-KNOCK UP	1	SA	
10	6003-000261	SCREW-TAPTITE	1	SNA	
11	6107-001166	SPRING-CS	2	SA	
12	JC72-00972A	PMO-PLATE_LOCKER	1	SA	
13	JG61-70531A	SPRING ETC-LOCKER,PLATE	1	SA	
14	JC96-04743A	ELA HOU-HOLDER_PAD	1	SA	
14-1	JC61-02159A	HOLDER-PAD	1	SNA	

Drawer#	SEC_Code	Description	QT'y	Service	Remark
14-2	JC73-00140A	RPR-FRICTION PAD	1	SA	
14-3	JC61-02237A	PLATE-PAD	1	SNA	
14-4	JC63-01669A	SHEET PAD	1	SA	
14-5	JC63-01205A	GROUND-PAD	1	SA	
14-6	JC61-70911A	SPRING ETC-EXIT ROLL FD	1	SA	
15	JC61-01978A	HOUSING-HOLDER PAD	1	SA	
16	JC63-02100A	COVER-HANDLE_CASSETTE	1	SNA	
17	6107-001047	SPRING-ES	2	SA	
18	JC66-00529A	ROLLER-M-IDLE FEED	2	SA	
19	6003-000196	SCREW-TAPTITE	2	SA	
20	JC64-00353A	INDICATOR-PAPER	1	SNA	
21	JC63-01670A	SHEET-GUIDE_SIDE_FAR	2	SA	
22	JC63-02163A	SPONGE CST TOP	1	SNA	
23	JC61-01692A	SUPPORT-HOLDER PAD	1	SNA	
24	JC73-00141A	RPR-PAD CASSETTE	1	SA	

www.drukparts.pl

12. SCF

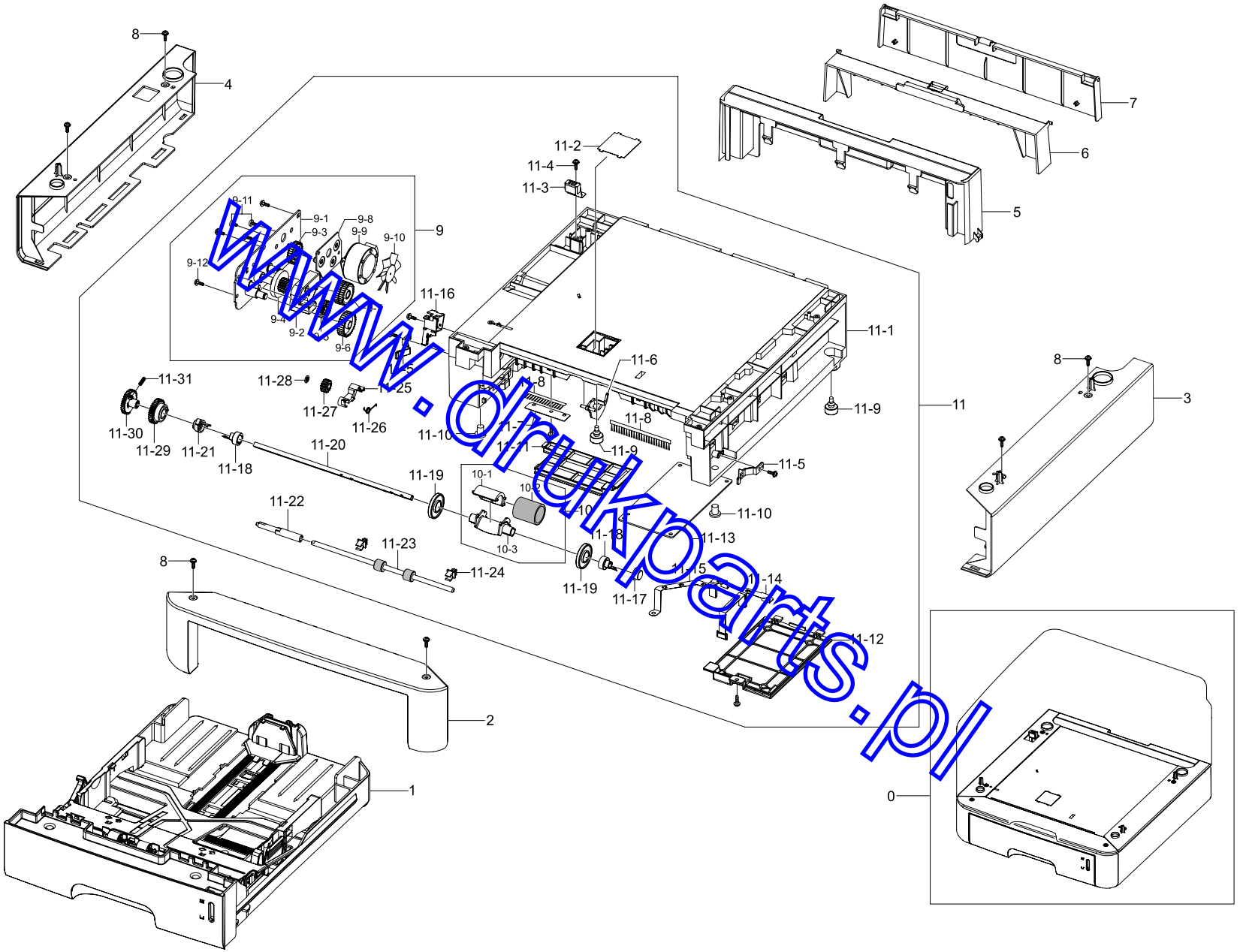

www.drukparts.pl

SCF Parts List

SA : SERVICE AVAILABLE, SNA : SERVICE not AVAILABLE

Drawer#	SEC_Code	Description	QT'y	Service	Remark
0	JC96-04735A	ELA UNIT-SCF	1	SNA	
1	JC97-03017A	MEA UNIT-CASSETTE	1	SA	
2	JC63-01607A	COVER-FRONT_SCF	1	SA	
3	JC63-01530A	COVER-RIGHT_SCF	1	SA	
4	JC63-01529A	COVER-LEFT_SCF	1	SA	
5	JC63-01608A	COVER-REAR_SCF	1	SA	
6	JC63-01650A	COVER-DUPLEX	1	SA	
7	JC63-01651A	COVER-REAR DUPLEX	1	SA	
8	6003-000196	SCREW-TAPTITE	6	SA	
9	JC96-04772A	ELA HOU-MOTOR_SCF	1	SA	
9-1	JC61-02228A	BRACKET-MOTOR_SCF	1	SNA	
9-2	JC61-02234A	SUPPORT-FEED_SCF	1	SNA	
9-3	JC66-01785A	GEAR-IDLE 59	1	SA	
9-4	JC66-00688A	GEAR-61/47 IDLE	1	SNA	
9-5	JC66-00396A	GEAR-IDLE 23	1	SA	
9-6	JC66-00690A	GEAR-35 IDLE	1	SNA	
9-7	JC66-01784A	GEAR-RDCN 57/18	1	SA	
9-8	JC61-02229A	BRACKET-GEAR_SCF	1	SNA	
9-9	JC31-00011E	MOTOR STEP	1	SA	
9-10	JC72-00825A	PMO-IMPELLER_DRV	1	SA	
9-11	6003-000269	SCREW-TAPTITE	5	SA	
9-12	6031-000023	WASHER-PLAIN	3	SA	
10	JC97-03062A	MEA UNIT-PICK UP	1	SA	
10-1	JC61-00909A	HOUSING-M-PICK UP_R2	1	SA	
10-2	JC73-00265A	RUBBER-PICK_UP	1	SA	
10-3	JC61-00910A	HOUSING-M-PICK UP2_R2	1	SA	
11	JC96-04771A	ELA HOU-FRAME_SCF	1	SA	

Drawer#	SEC_Code	Description	QT'y	Service	Remark
11-1	JC61-02189A	FRAME-SCF	1	SNA	
11-2	JC63-00369A	SHEET-COVER SENSOR	1	SA	
11-3	JC70-11028A	IPR-GROUND TOP	1	SA	
11-4	6003-000196	SCREW-TAPTITE	11	SA	
11-5	JC72-00983A	PMO-LOCKER CST	2	SA	
11-6	JC72-00975A	PMO-ACTUATOR EMPTY	1	SA	
11-7	JC63-00527A	SHEET-BRUSH	1	SA	
11-8	JC75-00095A	MEC-BRUSH ANTISTATIC	0.5	SA	
11-9	JC61-40001A	FOOT-ML80	2	SA	
11-10	JC61-00836A	FOOT-FRONT	2	SA	
11-11	JC63-01609A	COVER-HARNESS_SCF	1	SA	
11-12	JC63-00492A	COVER-M-SIMM R2	1	SA	
11-13	JC92-01911A	PBA-SCF	1	SA	
11-14	JC63-01636A	GROUND-PAPER_SCF	1	SNA	
11-15	JC63-01635A	GROUND-BRUSH_SCF	1	SNA	
11-16	JC33-00026A	SOLENOID-PICK UP	1	SA	
11-17	JC61-00587A	BUSH-M-PICK_UP R	1	SA	
11-18	JC61-00915A	STOPPER-M-PICK UP_R2	2	SA	
11-19	JC72-00982A	PMO-IDLE PICK_UP	2	SA	
11-21	JC66-00379A	CAM-M-PICK_UP	1	SA	
11-22	JC66-01053A	SHAFT-FEED_SCF	1	SA	
11-23	JC66-00508A	ROLLER-FEED	1	SA	
11-24	JC72-00382B	PMO-BUSHING FEED	2	SA	
11-27	JC66-00394A	GEAR-FEED 2	1	SA	
11-29	JC72-00980A	PMO-GEAR PICK_UP B	1	SA	
11-31	6107-001170	SPRING-TS	1	SA	

www.druk-parts.pl