8. Exploded Views and Parts List

Contents

8.1 Main 8-2
8.2 Middle Cover 8-3
8.3 Front Cover 8-4
8.4 Right Cover 8-5
8.5 Round Cover 8-6
8.6 Rear Cover 8-7
8.7 Cover Platen 8-8
8.8 Platen Ass'y 8-9
8.9 OPE(CLX-3160FN) 8-10
OPE(CLX-3160N) 8-11
8.10 Scan Ass'y 8-12
8.11 ADF Ass'y 8-13
8.12 ADF Lower 8-14
8.13 ADF Motor 8-15
8.14 Frame 8-16
8.15 Main Driver 8-18
8.16 LSU Cover 8-20
8.17 ITB Unit 8-21
8.18 OPC DEVE 8-22
8.19 Fuser Ass'y 8-24
8.20 Cassette 8-25

www.drukparts.pl

DIGITAL COLOR LASER MFP

The keynote of Product

1. Engine Speed :
   Up to 16 ppm in A4 black (17 ppm in Letter)
   Up to 4 ppm in A4 color (4 ppm in Letter)
2. Resolution :
   - Optical, 600 x 600 dpi
   - Support, MAX: 2400 x 600 dpi class, 1200 x 600 dpi (default), 600 x 600 dpi (Color & B&W)
3. MPU : Samsung CHORUSm 300MHz
4. Memory :
   - Std.: 128 MB, Max.: 128 MB (Memory not Expansion)
5. Default Driver: SPL-C (Samsung Printer Language Color)
6. USB: USB 2.0, USB host (Scan to USB, Direct print)
7. Network : Ethernet 10/100 Base TX
8. Consumable :
   - 6 (C/M/Y/K toner, Imaging Unit, Waste toner box)
   - K toner : CLX-K3160A
   - C toner : CLX-C3160A
   - M toner : CLX-M3160A
   - Y toner : CLX-Y3160A
   - Imaging unit : CLP-R300A (common with CLP-300)
   - Waste toner box : CLP-W300A (common with CLP-300)
   - CMY Rainbow kit : CLX-P3160A
9. SET Life Cycle : 200,000 image

8.1 Main

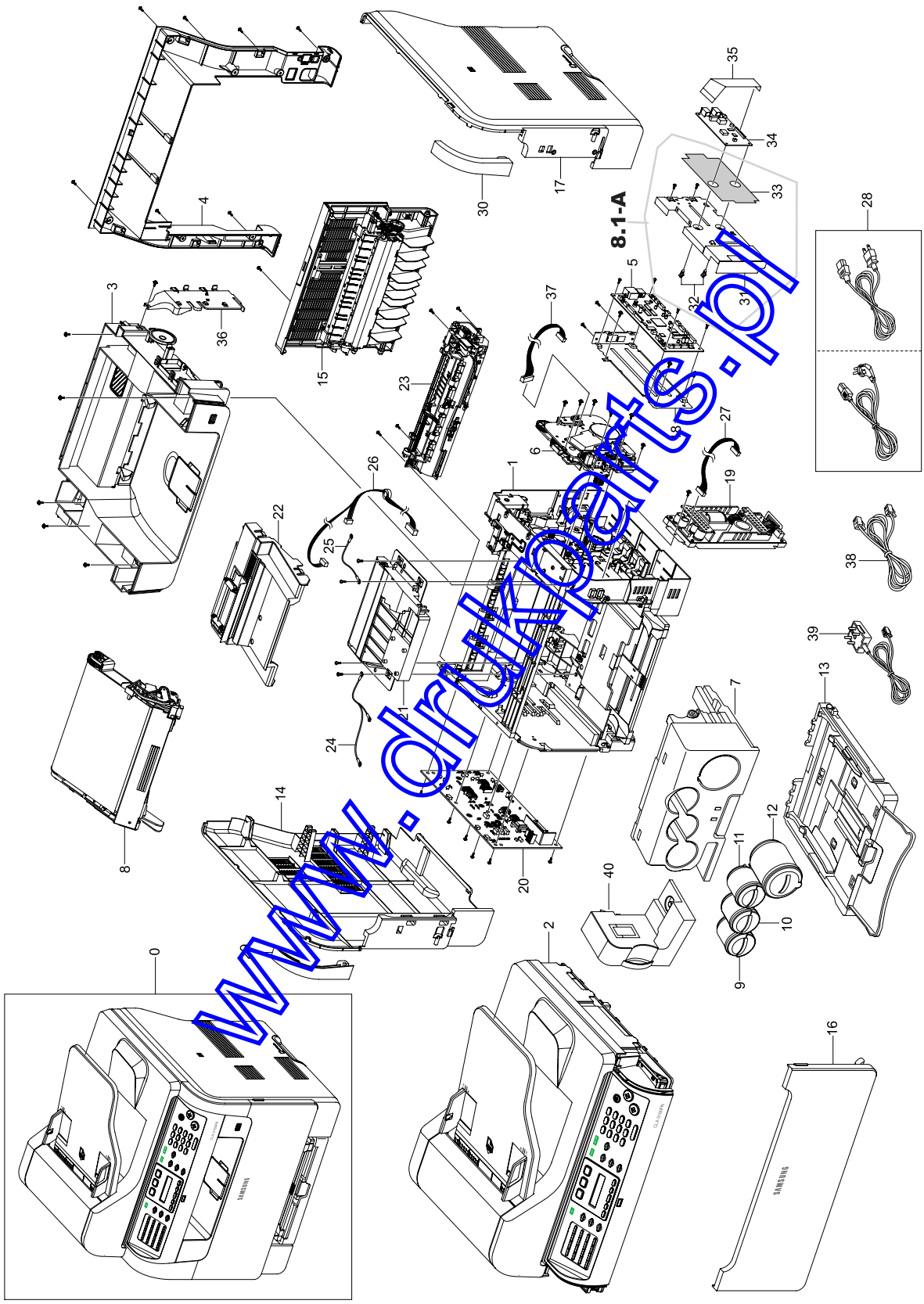

www.drukarki.pl

Parts List(CLX-3160FN)

Service(SA:service available, SNA:service not available)

Drawer#	SEC_Code	Description	QT'y	Service	Remark
8.1 Main					
8.1-0	CLX-3160FN/XAA	4/16 PPM,SPL-C(GDI),ADF,4IN1			
8.1-1	JC97-02683A	MEA UNIT-FRAME	1	SA	
8.1-1-4	JF70-10616A	IPR-WASHER SPRING CU	2	SA	
8.1-1-5	JG66-40003A	GEAR-PINION	1	SA	
8.1-2	JC96-03929A	ELA HOU-SCAN_4IN1	1	SA	CLX-3160FN
8.1-2	JC96-03929J	ELA HOU-SCAN_4IN1;only KOREA	1	SA	CLX-3160FN
8.1-2	JC96-03930A	ELA HOU-SCAN_3IN1	1	SA	CLX-3160N
8.1-2	JC96-03930D	ELA HOU-SCAN_3IN1; only KOREA	1	SA	CLX-3160N
8.1-3	JC96-04089A	ELA UNIT-COVER MIDDLE	1	SA	CLX-3160FN
8.1-3	JC96-04089B	ELA UNIT-COVER MIDDLE	1	SA	CLX-3160N
8.1-4	JC97-02690A	MEA UNIT-COVER ROUND	1	SA	
8.1-5	JC92-01707D	PBA MAIN-CONT_FN	1	SA	CLX-3160FN
8.1-5	JC92-01707E	PBA MAIN-CONTROLLER	1	SA	CLX-3160N
8.1-6	JC96-03608A	ELA UNIT-DRIVE MAIN	1	SA	
8.1-7	JC96-03610A	ELA UNIT-OPC DEV_SET	1	SNA	
8.1-7	JC96-03610C	ELA UNIT-OPC DEV_SET; only KOREA	1	SNA	
8.1-8	JC96-03611A	ELA UNIT-ITB_SET	1	SA	
8.1-9	JC97-02615A	MEA UNIT-DEV C	1	SNA	
8.1-10	JC97-02614A	MEA UNIT-DEV M	1	SNA	
8.1-11	JC97-02613A	MEA UNIT-DEV Y	1	SNA	
8.1-12	JC97-02616A	MEA UNIT-DEV K	1	SNA	
8.1-13	JC97-02332A	MEA-UNIT CASSETTE	1	SA	
8.1-13	JC97-02332C	MEA-UNIT CASSETTE; only KOREA	1	SA	
8.1-14	JC63-01023A	COVER-M-LEFT	1	SA	
8.1-15	JC97-02440A	MEA UNIT-COVER REAR	1	SA	
8.1-15	JC97-02440B	MEA UNIT-COVER REAR	1	SA	
8.1-16	JC97-02684A	MEA UNIT-COVER FRONT	1	SA	
8.1-17	JC97-02799A	MEA UNIT-COVER RIGHT	1	SA	CLX-3160FN
8.1-17	JC97-02799B	MEA UNIT-COVER RIGHT	1	SA	CLX-3160
8.1-18	JC63-00863A	SHIELD-P-MAIN LOWER	1	SNA	
8.1-19	JC44-00097A	SMPS-PSP_TYPE3_V2	1	SA	AC 110V
8.1-19	JC44-00090A	SMPS-PSP_TYPE3_V2C	1	SA	AC 220V
8.1-20	JC44-00089A	HVPS-GOGH	1	SA	
8.1-21	JC97-02656A	MEA UNIT-COVER LSU	1	SA	
8.1-22	JC59-00018E	UNIT-LSU	1	SA	
8.1-23	JC96-04088B	ELA UNIT-FUSER	1	SA	AC 110V
8.1-23	JC96-04088A	ELA UNIT-FUSER	1	SA	AC 220V
8.1-24	JC61-01660A	GUIDE-M HARNESS	1	SA	
8.1-26	JC39-00483A	CBF HARNESS-LSU	1	SA	
8.1-27	JC39-00484A	CBF HARNESS-SMPS	1	SA	
8.1-28	3903-000085	CBF-POWER CORD	1	SA	AC 110V
8.1-28	3903-000086	CBF-POWER CORD	1	SA	AC 220V
8.1-28	3903-000139	CBF-POWER CORD; only KOREA	1	SA	AC 220V
8.1-29	JC63-00934A	COVER-M_LEFT UPPER	1	SA	
8.1-30	JC63-00933A	COVER-M_RIGHT UPPER	1	SA	
8.1-A	JC97-02807A	MEA UNIT-LIU	1	SA	CLX-3160FN
8.1-31	JC63-01030A	SHIELD-P-LIU	1	SA	CLX-3160FN
8.1-32	6103-001049	SUPPORTER	2	SNA	CLX-3160FN
8.1-33	JC63-01148A	SHEET-LIU	1	SA	CLX-3160FN
8.1-34	JC92-01746A	PBA SUB-MODEM	1	SA	CLX-3160FN
8.1-35	JC39-00570A	CBF SIGNAL-FAX	1	SNA	CLX-3160FN
8.1-37	JC39-00486A	CBF HARNESS-BLDC	1	SA	
8.1-38	JF39-50094B	CBF LINE CORD	1	SA	CLX-3160FN
	-	BOX-MAIN	1	SA	
	JC39-00001A	CBF INTERFACE-USB	1	SA	

www.dmkparts.pl

8.2 Middle Cover

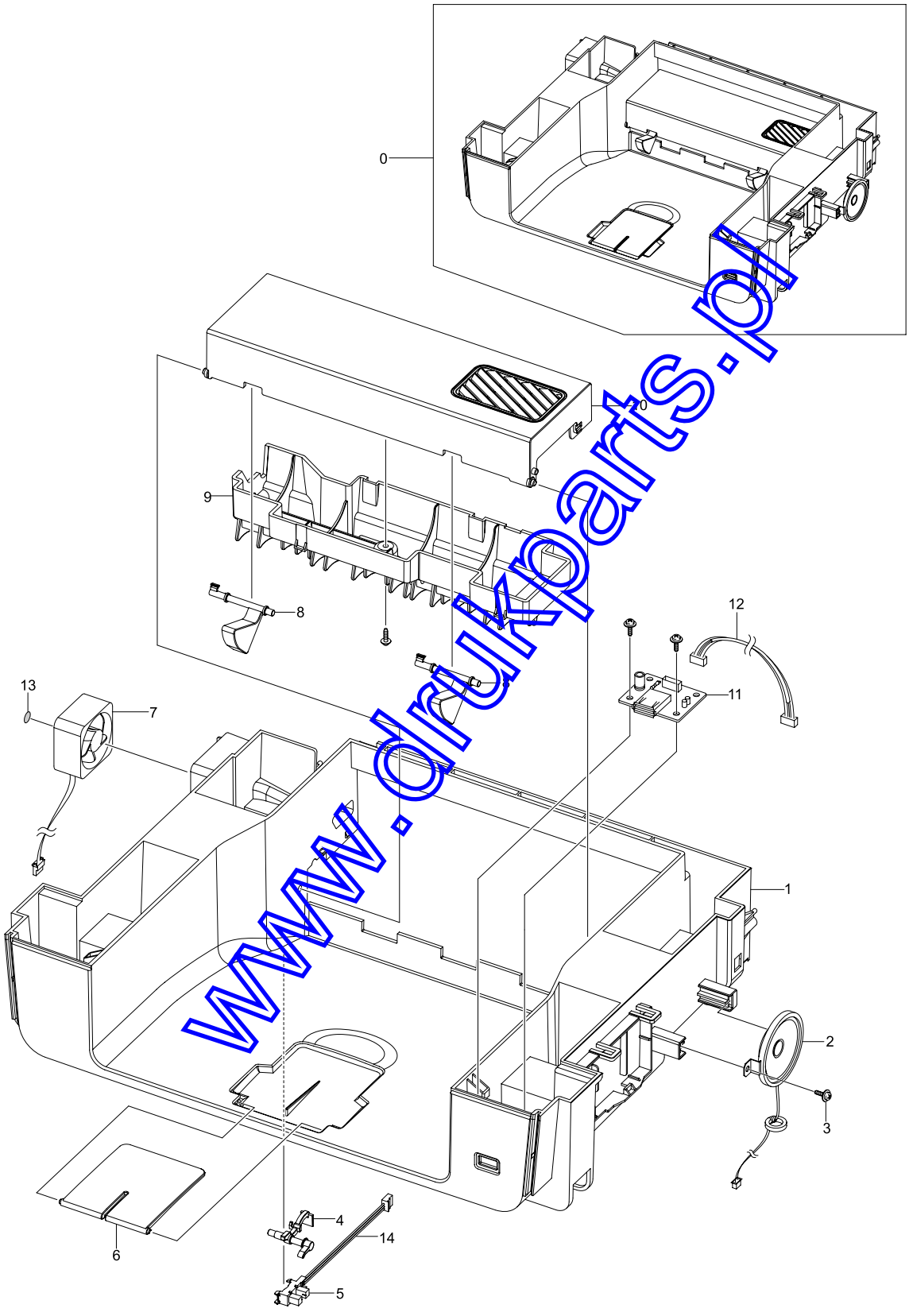

www.drukparts.pl

Drawer#	SEC_Code	Description	QT'y	Service	Remark
8.2 Middle Cover					
8.2-0	JC96-04089A	ELA UNIT-COVER MIDDLE	1	SA	CLX-3160FN
8.2-0	JC96-04089B	ELA UNIT-COVER MIDDLE	1	SA	CLX-3160N
8.2-1	JC63-01027A	COVER-M-MIDDLE	1	SA	
8.2-2	3001-001591	SPEAKER	1	SA	
8.2-3	6003-000196	SCREW-TAPTITE	1	SA	
8.2-4	JC66-01221A	LEVER-M ACT OUTFULL	1	SNA	
8.2-5	0604-001095	PHOTO-INTERRUPTER	1	SA	
8.2-6	JC63-00944A	COVER-M_STACKER RX	1	SA	
8.2-7	JC31-00027C	FAN	1	SA	
8.2-8	JC66-01220A	LEVER-M STACKING	2	SNA	
8.2-9	JC61-01656A	GUIDE-M-OUTPUT FUSER	1	SA	
8.2-10	JC63-01025A	COVER-M-JAM	1	SA	
8.2-11	JC92-01636A	PBA SUB-USB HOST	1	SA	
8.2-12	JC39-00571A	CBF HARNESS-USB_HOST	1	SA	
8.2-13	JC68-01760A	LABEL-INFORMATION	1	SNA	

www.drukparts.pl

8.3 Front Cover

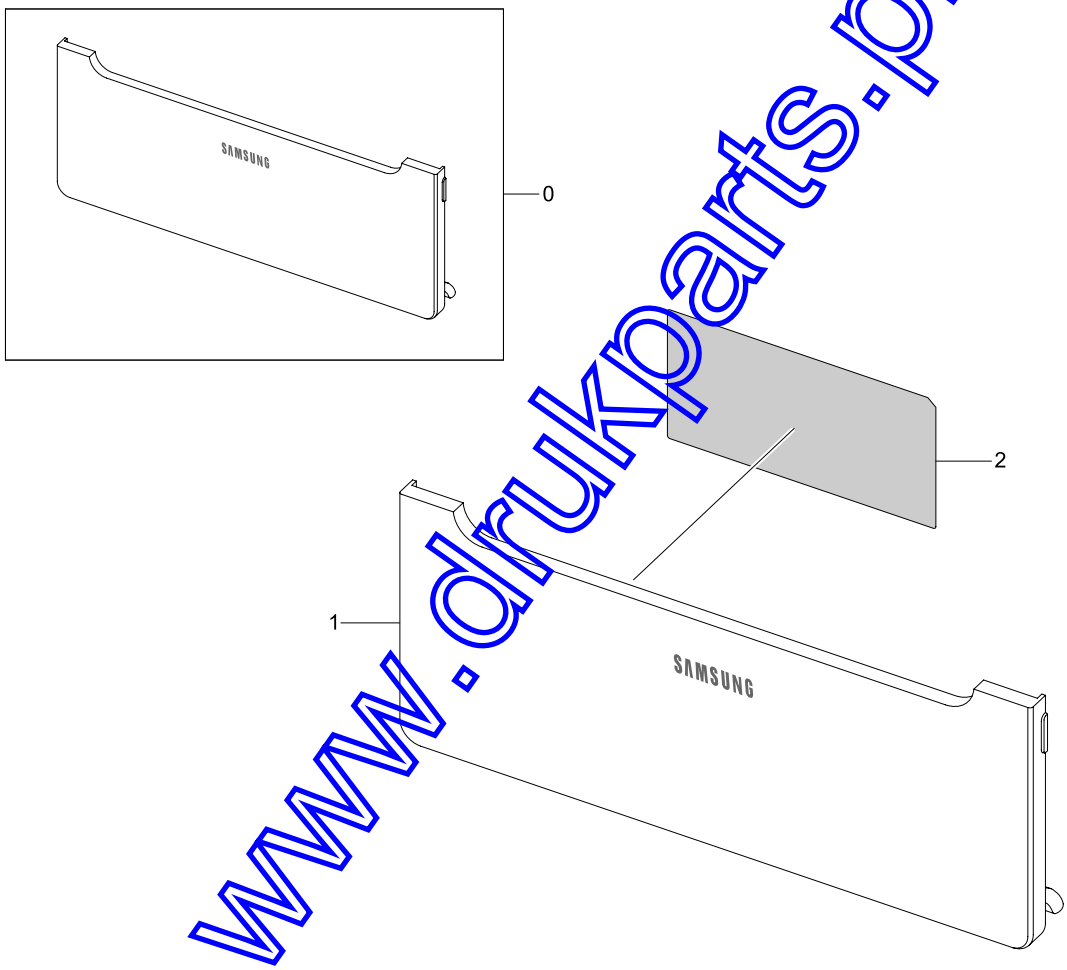

www.drukparts.pl

Drawer#	SEC_Code	Description	QT'y	Service	Remark
8.3 Front Cover					
8.3-0	JC97-02684A	MEA UNIT-COVER FRONT	1	SA	
8.3-1	JC63-01022A	COVER-M-FRONT	1	SA	
8.3-2	JC68-01732A	LABEL-INSTRUCTION	1	SNA	

www.drukparts.pl

8.4 Right Cover

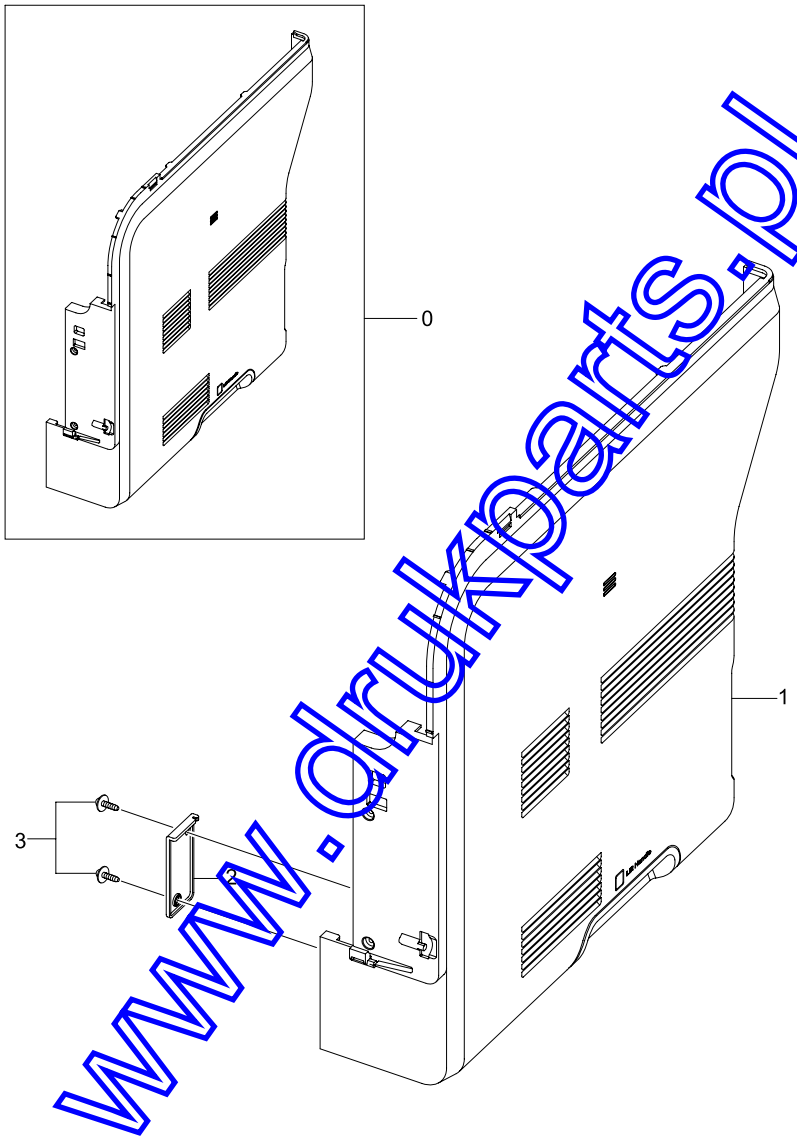

www.drukparts.pl

Drawer#	SEC_Code	Description	QT'y	Service	Remark
8.4 Right Cover					
8.4-0	JC97-02799A	MEA UNIT-COVER RIGHT	1	SA	CLX-3160FN
8.4-0	JC97-02799B	MEA UNIT-COVER RIGHT	1	SA	CLX-3160N
8.4-1	JC63-01024A	COVER-M-RIGHT	1	SA	CLX-3160FN
8.4-1	JC63-01024C	COVER-M-RIGHT	1	SA	CLX-3160N
8.4-2	JC63-01174A	COVER-M-RIGHT-GRILL	1	SNA	
8.4-3	6003-000196	SCREW-TAPTITE	2	SA	

www.drukparts.pl

8.5 Round Cover

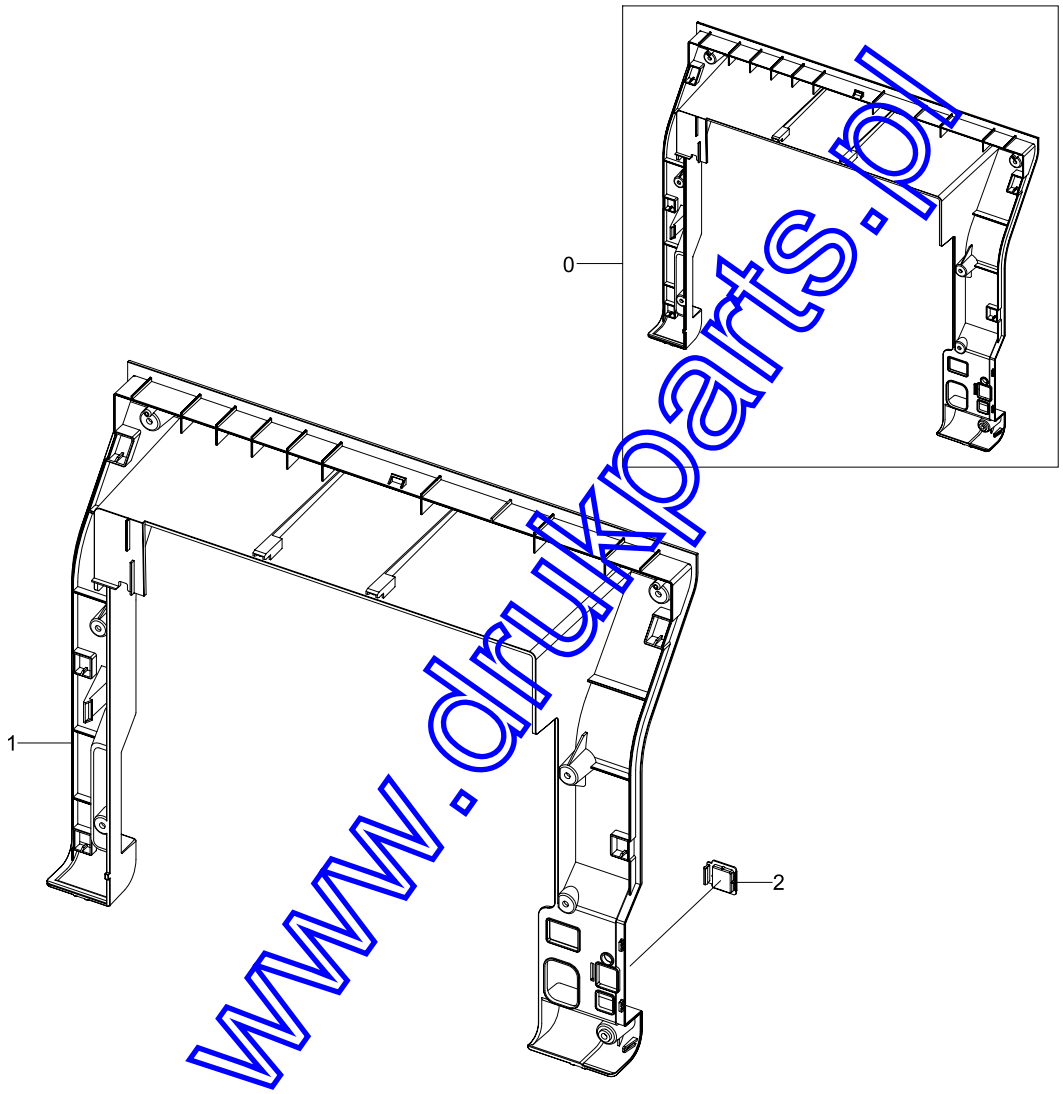

www.drukparts.pl

Drawer#	SEC_Code	Description	QT'y	Service	Remark
8.5 Round Cover					
8.5-0	JC97-02690A	MEA UNIT-COVER ROUND	1	SA	
8.5-1	JC63-01026A	COVER-M-REAR_MFP	1	SA	
8.5-2	JC67-00160A	CAP-NETWORK	1	SNA	

www.drukparts.pl

8.6 Rear Cover

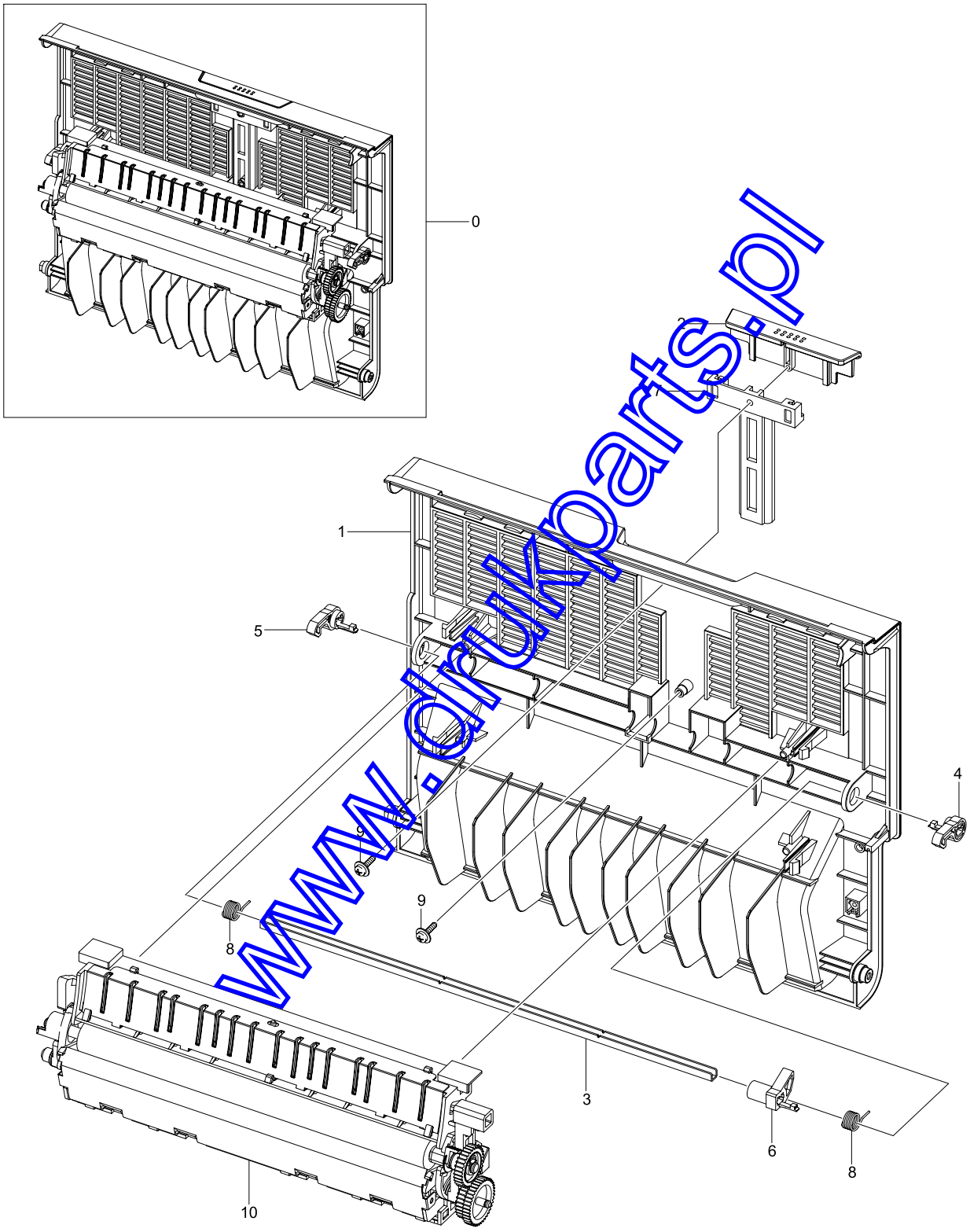

www.drukparts.pl

Drawer#	SEC_Code	Description	QT'y	Service	Remark
8.6 Rear Cover					
8.6-0	JC97-02440A	MEA UNIT-COVER REAR	1	SA	
8.6-0	JC97-02440B	MEA UNIT-COVER REAR	1	SA	
8.6-1	JC63-00844A	COVER-M-REAR	1	SNA	
8.6-1	JC63-00844B	COVER-M-REAR	1	SNA	
8.6-2	JC64-00215A	BUTTON-M-OPEN REAR	1	SNA	
8.6-2	JC64-00215B	BUTTON-M-OPEN REAR	1	SNA	
8.6-3	JC66-01089A	SHAFT-P-LOCKBAR REAR	1	SNA	
8.6-4	JC61-01461A	HOLDER-M-HOOK REAR R	1	SNA	
8.6-5	JC61-01456A	HOLDER-M-HOOK REAR L	1	SNA	
8.6-6	JC61-01462A	HOLDER-M-HOOK REAR C	1	SNA	
8.6-7	JC66-01071A	LEVER-M-REAR LOCK	1	SNA	
8.6-7	JC66-01071B	LEVER-M-REAR LOCK	1	SNA	
8.6-8	6107-001268	SPRING-TS	2	SA	
8.6-9	6002-000440	SCREW-TAPPING	2	SNA	
8.6-10	JC96-03990A	ELA UNIT-TRANSFER	1	SA	

www.drukparts.pl

8.7 Cover Platen

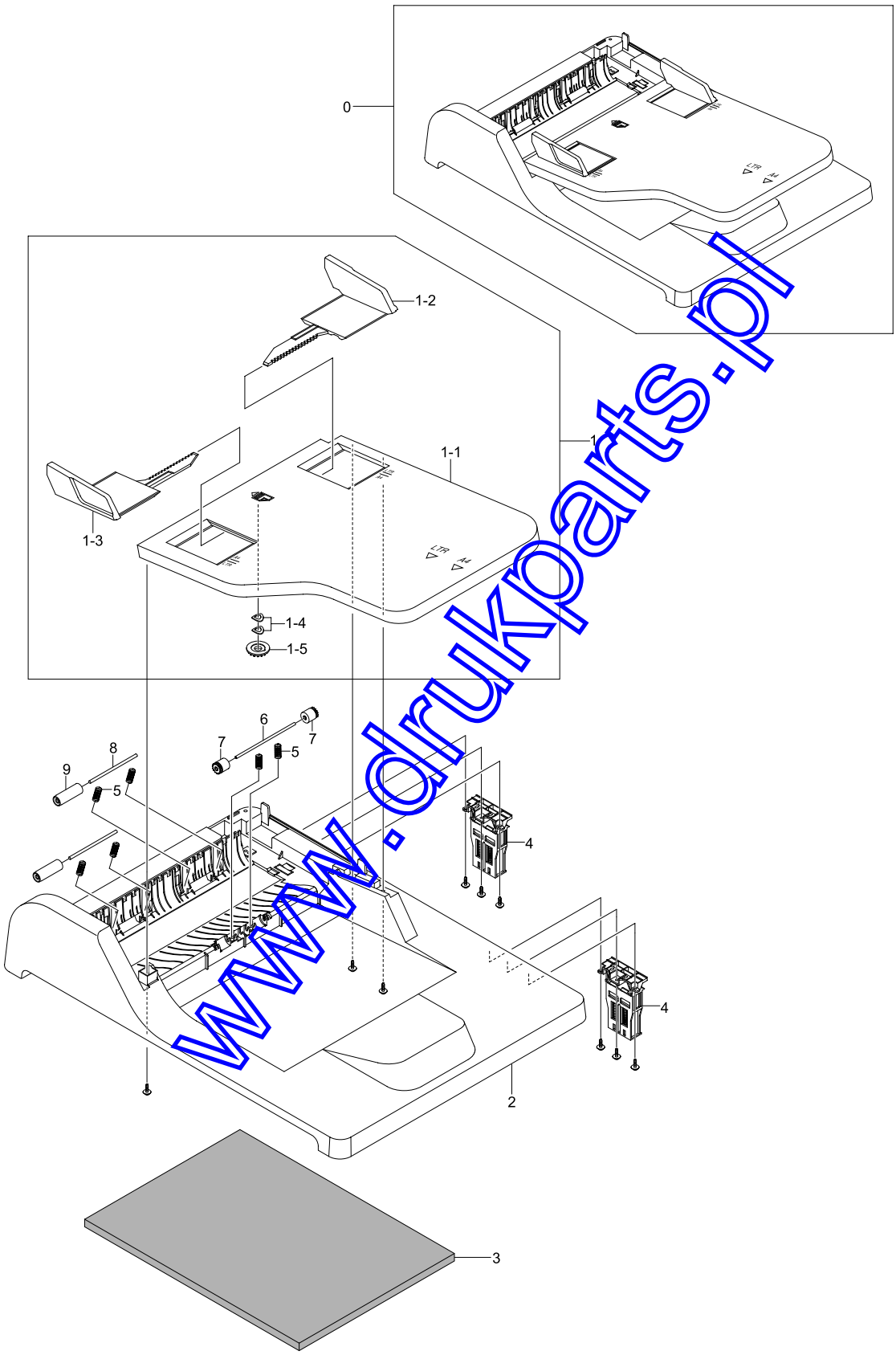

www.drukparts.pl

Drawer#	SEC_Code	Description	QT'y	Service	Remark
8.7 Cover Platen					
8.7-0	JC97-02416A	MEA-COVER PLATEN	1	SA	
8.7-1	JC97-02406A	MEA-TX STACKER	1	SA	
8.7-1-1	JC63-00988A	COVER-M_STACKER TX	1	SNA	
8.7-1-2	JC61-01609A	GUIDE-M_DOCU L	1	SNA	
8.7-1-3	JC61-01610A	GUIDE-M_DOCU R	1	SNA	
8.7-2	JC63-00984A	COVER-M_PLATEN	1	SNA	
8.7-3	JC63-00209A	SHEET-WHITE SPONGE	1	SA	
8.7-4	JC97-02779A	MEA UNIT-HINGE	2	SA	
8.7-5	JC61-00011A	SPRING ETC-FEED	6	SA	
8.7-6	JF70-40521B	ICT-SHAFT PINCH	1	SA	
8.7-7	JG72-40663A	PMO-ROLL PINCH	2	SA	
8.7-8	JC66-00909A	SHAFT-IDLE FEED	2	SA	
8.7-9	JC66-00728A	ROLLER-ADF FEED	2	SA	

www.drukparts.pl

8.8 Platen Ass'y

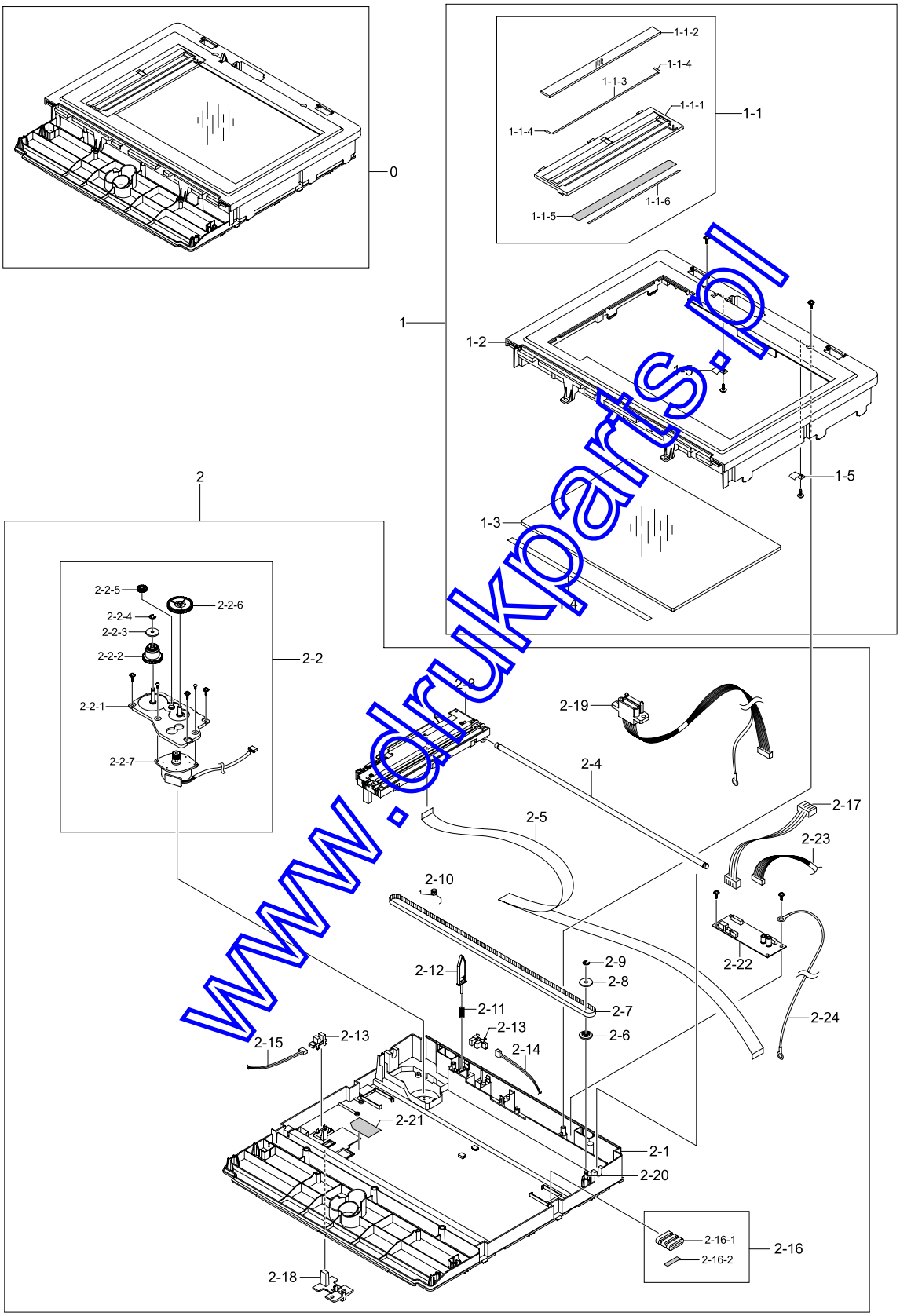

www.drukparts.pl

Drawer#	SEC_Code	Description	QT'y	Service	Remark
8.8 Platen Ass'y					
8.8-0	JC96-03917A	ELA HOU-PLATEN	1	SA	
8.8-1	JC97-02412A	MEA-SCAN UPPER	1	SA	
8.8-1-1	JC97-02429A	MEA UNIT-SCAN DUMMY	1	SA	
8.8-1-1-1	JC63-00152F	COVER-M_SCAN DUMMY	1	SA	
8.8-1-1-2	JC74-00021A	MCT-GLASS ADF	1	SA	
8.8-1-1-3	0203-001266	TAPE-DOUBLE FACE	1	SNA	
8.8-1-1-6	JC02-00013A	TAPE ETC-DOUBLE TAPE SMALL	1	SNA	
8.8-1-1-7	JB68-00644A	LABEL(P)-SHADING	1	SA	
8.8-1-1-8	0203-001744	TAPE-DOUBLE FACE	1	SNA	
8.8-1-2	JC63-00990A	COVER-M_SCAN UPPER	1	SNA	
8.8-1-3	JC01-00001A	GLASS-SCAN	1	SA	
8.8-1-4	0203-001267	TAPE-DOUBLE FACE	1	SNA	
8.8-1-5	JB70-00148A	IPR-HOLDER GLASS	2	SA	
8.8-2	JC96-03918A	ELA HOU-SCAN LOWER	1	SA	
8.8-2-1	JC63-00989B	COVER-M_SCAN LOWER	1	SNA	
8.8-2-10	JB61-00059A	SPRING ETC-BELT	1	SA	
8.8-2-11	6107-001135	SPRING-CS	1	SA	
8.8-2-12	JC72-00755A	PMO-LEVER SENSOR	1	SA	
8.8-2-13	0604-001095	PHOTO-INTERRUPTER	2	SA	
8.8-2-14	JC39-00563A	CBF HARNESS-COVE_OPEN	1	SA	
8.8-2-15	JC39-00564A	CBF HARNESS-BIN_FULL	1	SA	
8.8-2-16	JB96-01381A	ELA UNIT-CORE	1	SA	
8.8-2-16-1	3301-001413	CORE-FERRITE	1	SA	
8.8-2-16-2	JB68-00705A	LABEL(R)-DOUBLE CORE	1	SNA	
8.8-2-19	JC39-00565A	CBF HARNESS-ADF_DRAW	1	SA	
8.8-2-2	JC96-03069A	ELA HOU-SCAN MOTOR	1	SA	
8.8-2-2-1	JC61-00895A	BRACKET-SCAN MOTOR R2	1	SA	
8.8-2-22	JC92-01798A	PBA SUB-JOINT	1	SA	
8.8-2-2-2	JC66-00531A	GEAR-TIMING	1	SA	
8.8-2-23	JC39-00566A	CBF HARNESS-DRAW_JOINT	1	SA	
8.8-2-2-3	JB72-00764A	PMO-HOLDER BELT	1	SA	
8.8-2-24	JC39-00567A	CBF HARNESS-SYS_GND	1	SA	
8.8-2-2-4	6044-000125	RING-E	1	SC	
8.8-2-2-5	JB66-00083A	GEAR-IDLE	1	SA	
8.8-2-2-6	JC66-00530A	GEAR-REDUCTION73/37	1	SA	
8.8-2-2-7	JB31-00011A	MOTOR STEP SCAN	1	SA	
8.8-2-3	JC96-03819A	ELA HOU-CCDM 2905	1	SA	
8.8-2-4	JB70-00145A	ICT-SHAFT CCD	1	SNA	
8.8-2-5	JC39-00569A	CBF SIGNAL-CCD	1	SNA	
8.8-2-6	JB72-00763A	PMO-PULLEY	1	SA	
8.8-2-7	6602-001067	BELT-TIMING GEAR	1	SA	
8.8-2-9	6044-000125	RING-E	1	SA	

www.orukparts.pl

8.9 OPE(CLX-3160FN)

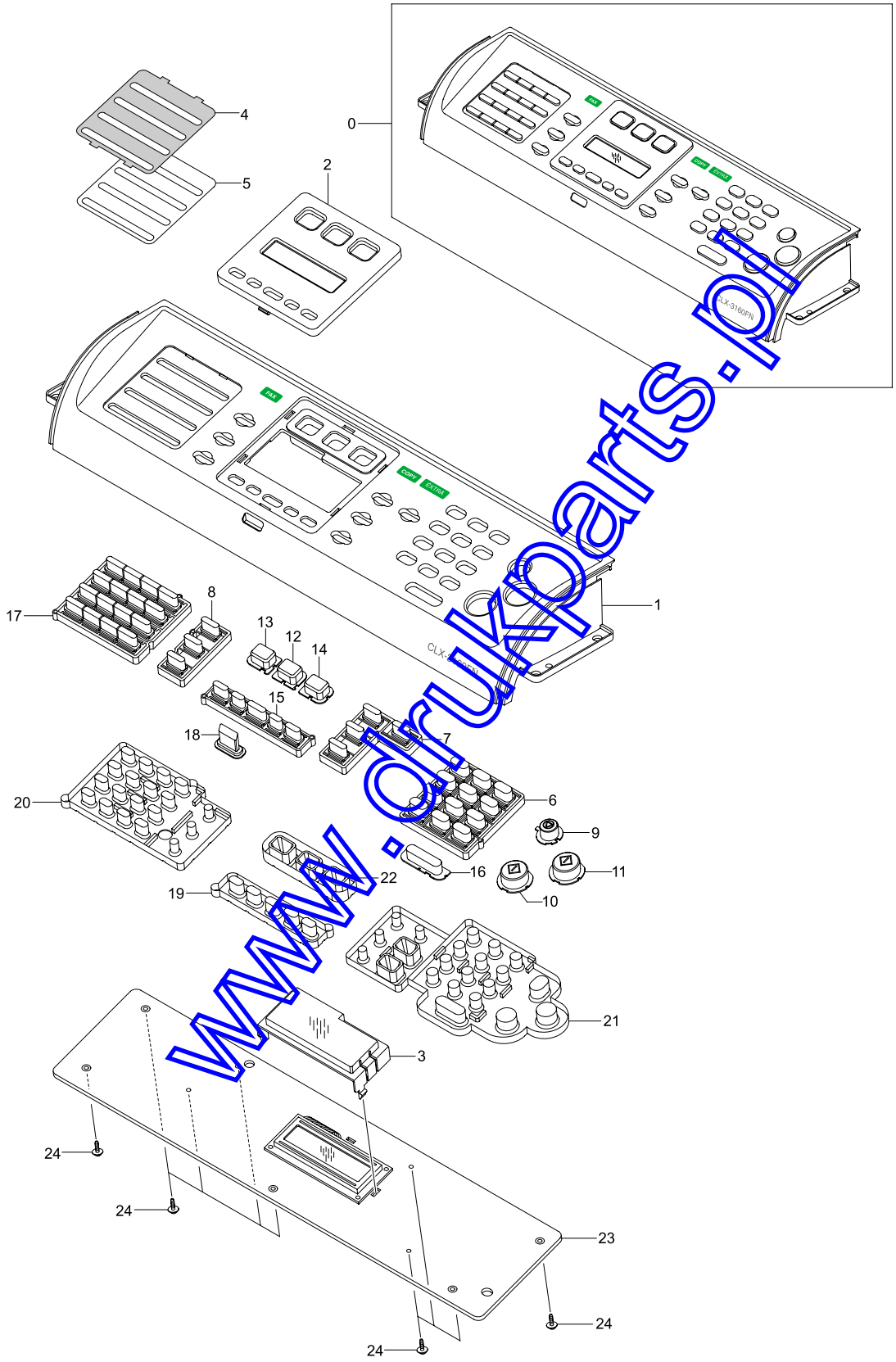

www.drukparts.pl

Drawer#	SEC_Code	Description	QT'y	Service	Remark
8.9 OPE(CLX-3160FN)					
8.9-0	JC96-03913A	ELA HOU-OPE 4IN1	1	SA	CLX-3160FN
8.9-0	JC96-03913J	ELA HOU-OPE 4IN1; only KOREA	1	SA	CLX-3160FN
8.9-0	JC96-03913N	ELA HOU-OPE 4IN1; only KOREA	1	SA	CLX-3160FNG
8.9-1	JC63-01020A	COVER-M-OPE 4IN1	1	SA	
8.9-1	JC63-01020J	COVER-OPE; only KOREA	1	SA	CLX-3160FN
8.9-1	JC63-01020N	COVER-OPE; only KOREA	1	SA	CLX-3160FNG
8.9-2	JC63-00991A	COVER-M_NEVI	1	SNA	
8.9-3	JC63-00993A	COVER-M_LCD	1	SA	
8.9-4	JC63-00999A	SHEET-ONETOUCH	1	SNA	
8.9-5	JC68-01639A	LABEL-ONETOUCH	1	SNA	
8.9-6	JC64-00239A	KEY-M_TEL	1	SNA	
8.9-7	JC64-00240A	KEY-M_COPY	1	SNA	
8.9-8	JC64-00241A	KEY-M_FAX	1	SNA	
8.9-9	JC64-00242A	KEY-M_STOP CLEAR	1	SNA	
8.9-10	JC64-00243B	KEY-M_START BLACK	1	SNA	
8.9-11	JC64-00259A	KEY-M-START COLOR	1	SNA	
8.9-12	JC64-00245A	KEY-M_MODE COPY	1	SNA	
8.9-13	JC64-00246A	KEY-M_MODE FAX	1	SNA	
8.9-14	JC64-00247A	KEY-M_MODE SCAN	1	SNA	
8.9-15	JC64-00248A	KEY-M_MENU	1	SNA	
8.9-16	JC64-00249A	KEY-M_ON HOOK	1	SNA	
8.9-17	JC64-00250A	KEY-M_ONETOUCH	1	SNA	
8.9-18	JC67-00148A	LENS LED-M_STATUS	1	SNA	
8.9-19	JC73-00230A	RUBBER-MENU	1	SNA	
8.9-20	JC73-00231A	RUBBER-ONETOUCH	1	SNA	
8.9-21	JC73-00232A	RUBBER-TEL_COPY	1	SNA	
8.9-22	JC73-00233A	RUBBER-MODE	1	SNA	
8.9-23	JC92-01747A	PBA SUB-OPE	1	SA	
8.9-24	6003-000196	SCREW-TAPTITE	9	SA	

www.drukparts.pl

8.9 OPE(CLX-3160N)

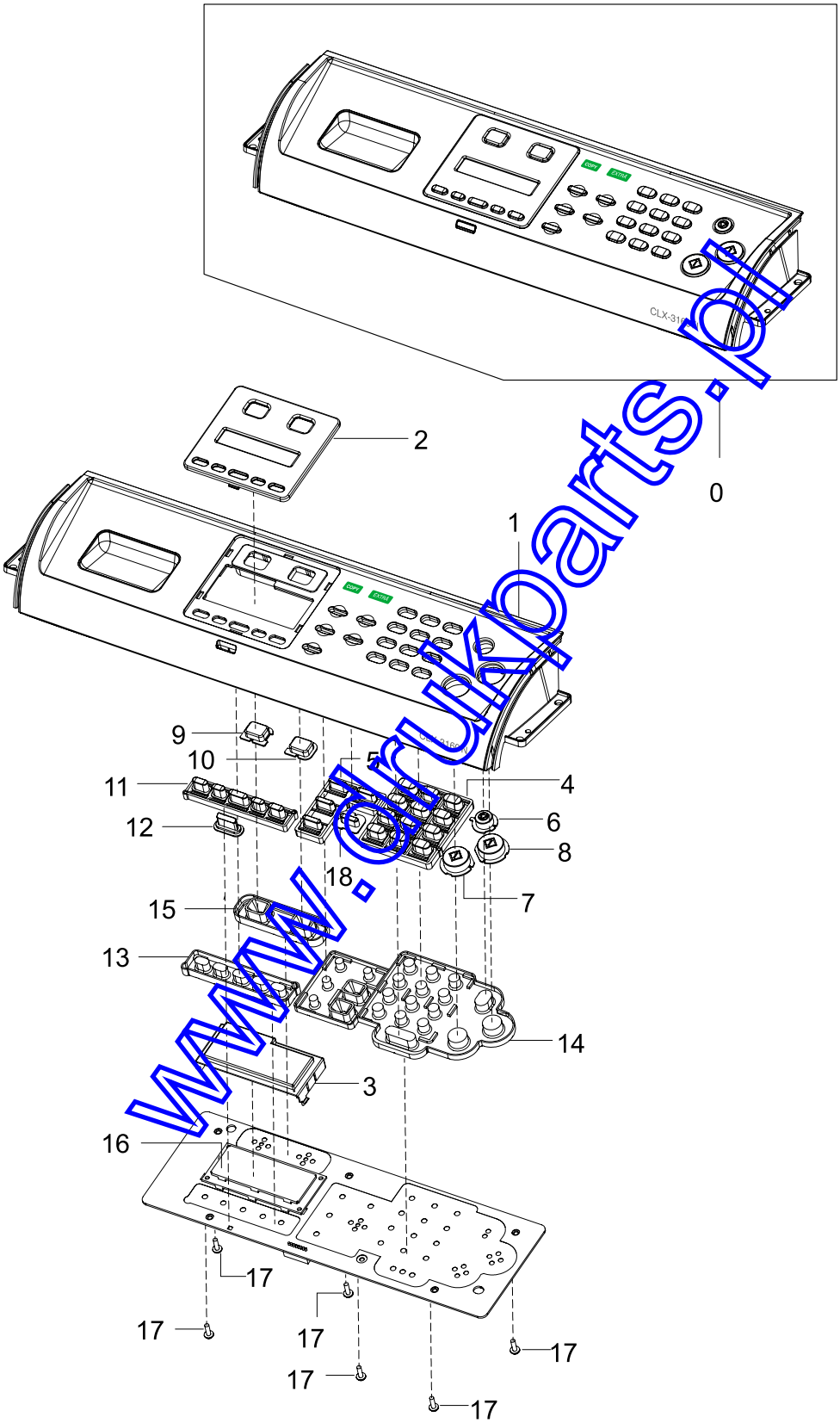

www.drukparts.pl

Drawer#	SEC_Code	Description	QT'y	Service	Remark
8.9 OPE(CLX-3160N)					
8.9-0	JC96-03914A	ELA HOU-OPE 3IN1	1	SA	CLX-3160N
8.9-0	JC96-03914D	ELA HOU-OPE 3IN1; only KOREA	1	SA	CLX-3160N
8.9-1	JC63-01021A	COVER-M-OPE 3IN1	1	SA	
8.9-1	JC63-01021D	COVER-M-OPE 3IN1; only KOREA	1	SA	
8.9-2	JC63-01002A	COVER-M_NEVI 3IN1	1	SNA	
8.9-2	JC63-01002N	COVER-M_NEVI 3IN1; only KOREA	1	SNA	
8.9-3	JC63-00993A	COVER-M_LCD	1	SA	
8.9-4	JC64-00239A	KEY-M_TEL	1	SNA	
8.9-5	JC64-00240A	KEY-M_COPY	1	SNA	
8.9-6	JC64-00242A	KEY-M_STOP CLEAR	1	SNA	
8.9-7	JC64-00243B	KEY-M_START BLACK	1	SNA	
8.9-8	JC64-00259A	KEY-M-START COLOR	1	SNA	
8.9-9	JC64-00245A	KEY-M_MODE COPY	1	SNA	
8.9-10	JC64-00247A	KEY-M_MODE SCAN	1	SNA	
8.9-11	JC64-00248A	KEY-M_MENU	1	SNA	
8.9-12	JC67-00148A	LENS LED-M_STATUS	1	SNA	
8.9-13	JC73-00230A	RUBBER-MENU	1	SNA	
8.9-14	JC73-00232A	RUBBER-TEL_COPY	1	SNA	
8.9-15	JC73-00234A	RUBBER-MODE 3IN1	1	SNA	
8.9-16	JC92-01748A	PBA SUB-OPE	1	SA	
8.9-16	JC92-01748B	PBA SUB-OPE; only KOREA	1	SA	
8.9-17	6003-000196	SCREW-TAPTITE	6	SA	
8.9-18	JC64-00244B	KEY-M_BLACK	1	SA	

www.drukparts.pl

8.10 Scan Ass'y

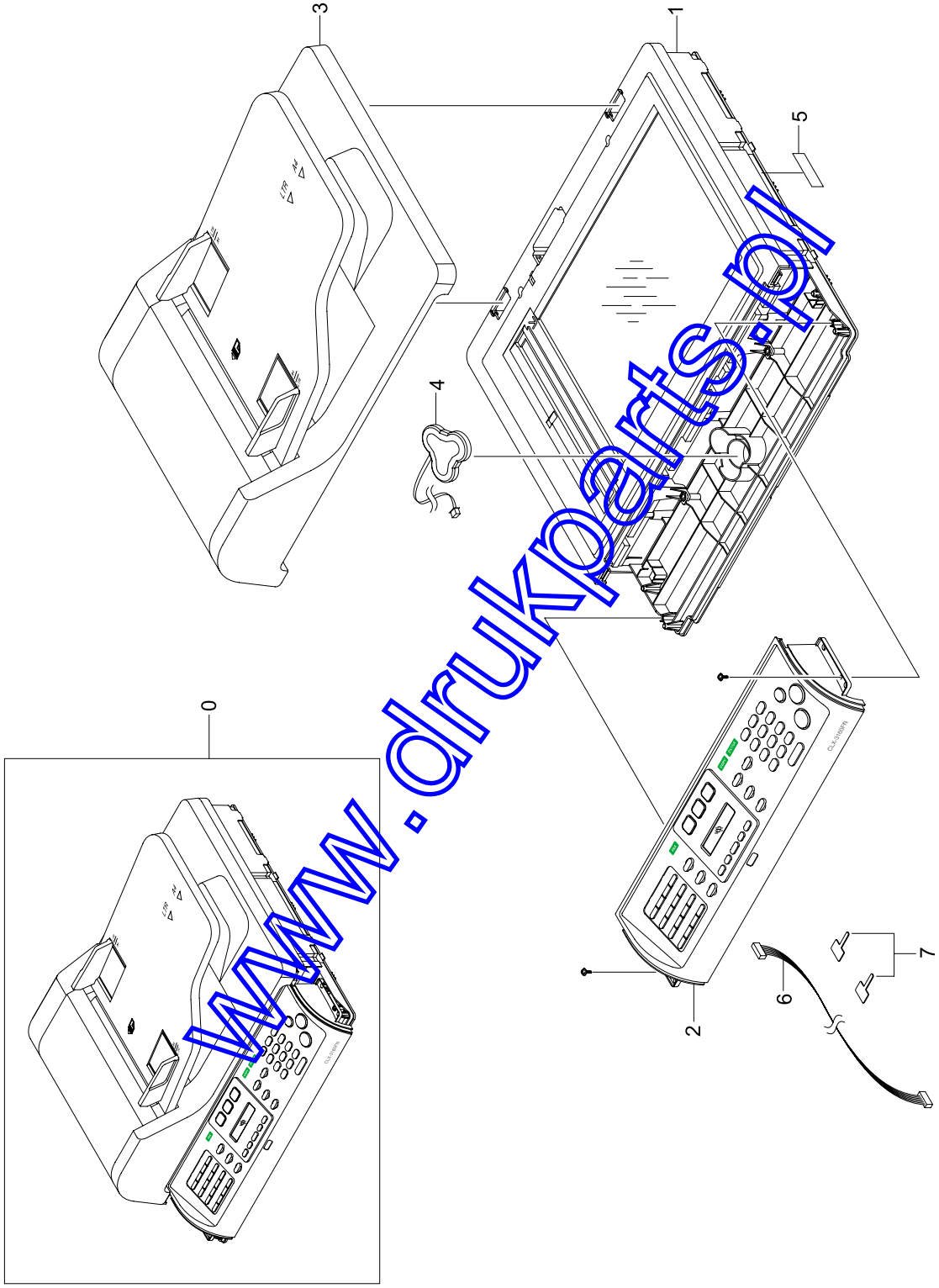

www.drukparts.pl

Drawer#	SEC_Code	Description	QT'y	Service	Remark
8.10 Scan Ass'y					
8.10-0	JC96-03929A	ELA HOU-SCAN_4IN1	1	SA	CLX-3160FN
8.10-0	JC96-03929J	ELA HOU-SCAN_4IN1; only KOREA	1	SA	SCX-3160FN
8.10-0	JC96-03929N	ELA HOU-SCAN_4IN1; only KOREA	1	SA	SCX-3160FNG
8.10-3	JC96-03919A	ELA HOU-ADF	1	SA	

www.drukparts.pl

8.11 ADF Ass'y

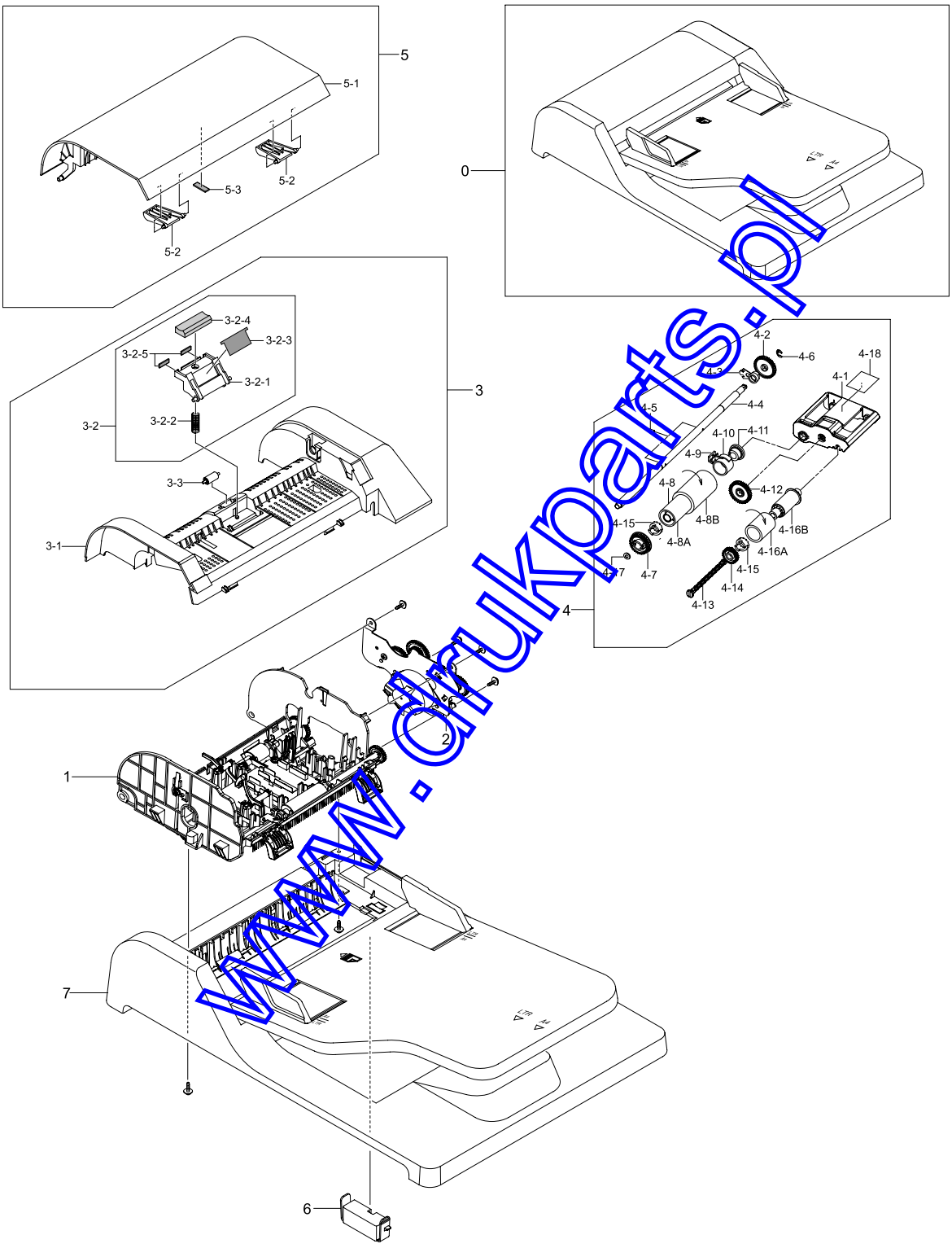

www.drukparts.pl

Drawer#	SEC_Code	Description	QT'y	Service	Remark
8.11 ADF Ass'y					
8.11-0	JC96-03919A	ELA HOU-ADF	1	SA	
8.11-1	JC96-03916A	ELA HOU-ADF LOWER	1	SA	
8.11-2	JC96-03915A	ELA HOU-ADF MOTOR	1	SA	
8.11-3	JC97-02410A	MEA-ADF UPPER	1	SNA	
8.11-3-1	JC63-00985A	COVER-M_ADF UPPER	1	SA	
8.11-3-2	JC97-01940B	MEA UNIT-HOLDER ADF	1	SA	
8.11-3-2-1	JC61-00893B	HOLDER-M_PAD ADF	1	SA	
8.11-3-2-2	JC61-00387A	SPRING ETC-PAD	1	SA	
8.11-3-2-3	JC63-00373A	SHEET-ADF HOLDER	1	SNA	
8.11-3-2-4	JB73-00052A	RMO-ADF RUBBER	1	SA	
8.11-3-2-5	JC66-00738A	DAMPER-PAD ADF_R2	2	SNA	
8.11-3-3	JC66-00461A	ROLLER-M-ADF IDLE	1	SA	
8.11-4	JC97-01962C	MEA UNIT-PICKUP	1	SA	
8.11-4-1	JB75-00299A	MEC-ADF ROLLER ASSY	1	SA	
8.11-4-2	JC66-00561A	SHAFT-ADF PICKUP	1	SA	
8.11-4-3	JB66-00102A	GEAR-PICK UP IDEL 38	1	SA	
8.11-4-4	JB66-00103A	GEAR-ADF 38	1	SA	
8.11-4-5	JB61-70904A	SPRING ETC-CLUTCH	1	SA	
8.11-5	JC97-02411A	MEA-COVER OPEN	1	SA	
8.11-5-1	JC63-00983A	COVER-M_ADF OPEN	1	SNA	
8.11-5-2	JB72-00843A	PMO-GUIDE PAPER	2	SA	
8.11-5-3	JC66-00738A	DAMPER-PAD ADF_R2	1	SNA	
8.11-6	JC63-00998A	COVER-M_ADF CONNECTOR	1	SNA	

www.drukparts.pl

8.12 ADF Lower

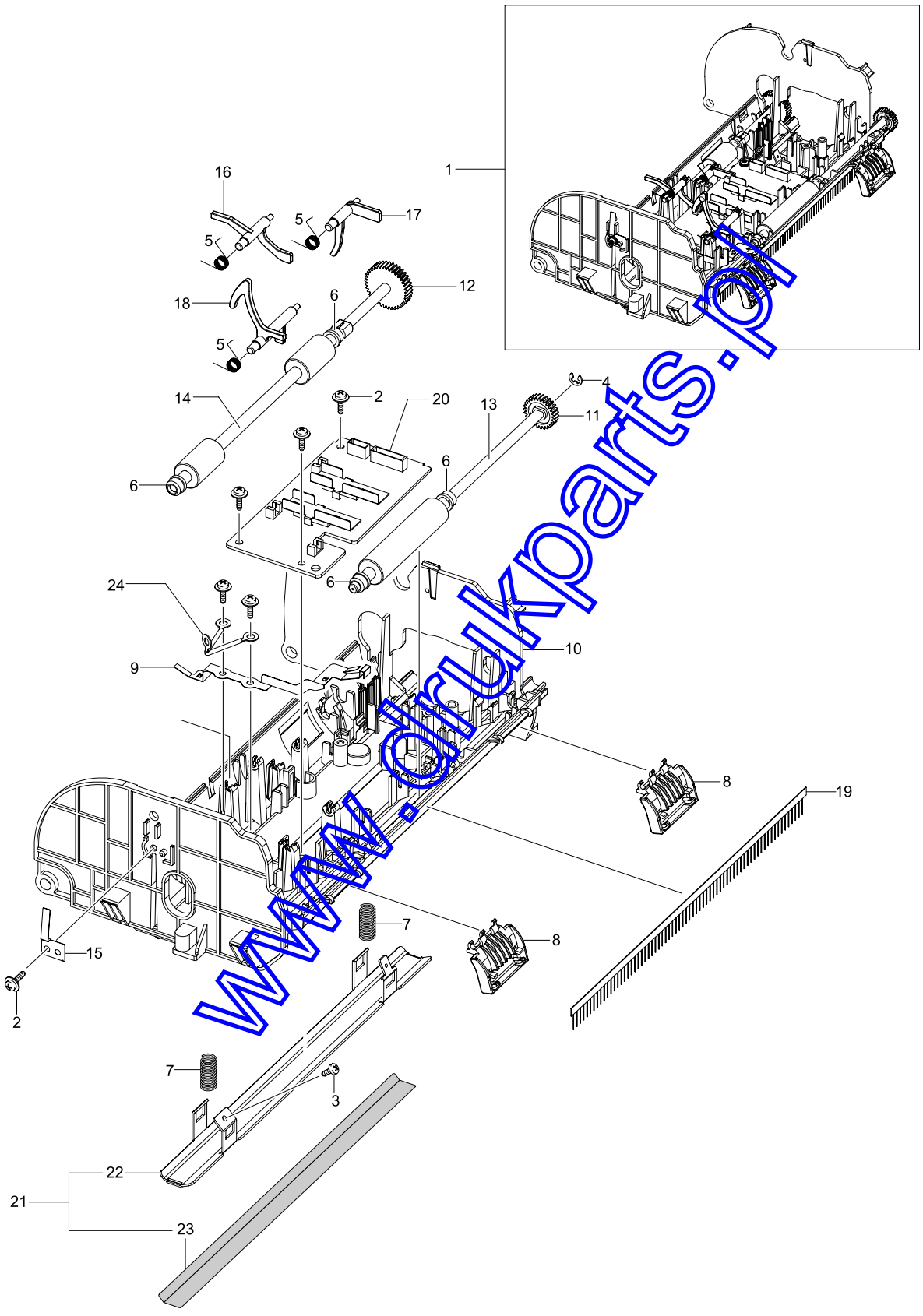

www.dukparts.pl

Drawer#	SEC_Code	Description	QT'y	Service	Remark
8.12 ADF Lower					
8.12-1	JC96-03916A	ELA HOU-ADF LOWER	1	SA	
8.12-4	6044-000159	RING-C	1	SA	
8.12-5	JB61-00076A	SPRING ETC-TORSION DOC (CC2-F)	3	SA	
8.12-6	JB72-00819A	PMO-BUSH	4	SA	
8.12-7	JC61-00548A	SPRING ETC-WHITE BAR	2	SA	
8.12-8	JC61-00712A	GUIDE-STACKER SUB	2	SA	
8.12-9	JC63-00372A	GROUND-P-ADF R2	1	SA	
8.12-10	JC63-00982A	COVER-M_ADF LOWER	1	SNA	
8.12-11	JC66-00310A	GEAR-AGITATOR-2	1	SNA	
8.12-12	JC66-00460A	SHAFT-M-FEED GEAR 38	1	SA	
8.12-13	JC66-00559A	ROLLER-EXIT	1	SA	
8.12-14	JC66-00560A	ROLLER-DRIVE	1	SA	
8.12-15	JC70-10467A	IPR-GROUND_ROLLER	1	SNA	
8.12-16	JC72-01010A	PMO-ACTUATOR REGI SENSOR	1	SA	
8.12-17	JC72-01011A	PMO-ACTUATOR SCAN SENSOR	1	SA	
8.12-18	JC72-01320A	PMO-ACT EMPTY ADF	1	SA	
8.12-19	JC75-00095A	MEC-BRUSH ANTISTATIC	1	SA	
8.12-20	JC92-01618A	PBA SUB-ADF	1	SA	
8.12-22	JC61-01695A	BRACKET-P_WHITE_BAR	1	SA	
8.12-23	JC72-00752A	PPR-WHITE BAR SHEET	1	SA	
8.12-24	JC39-00187A	CBF HARNESS-ADF ROLLER GND	1	SA	

www.drukparts.pl

8.13 ADF Motor

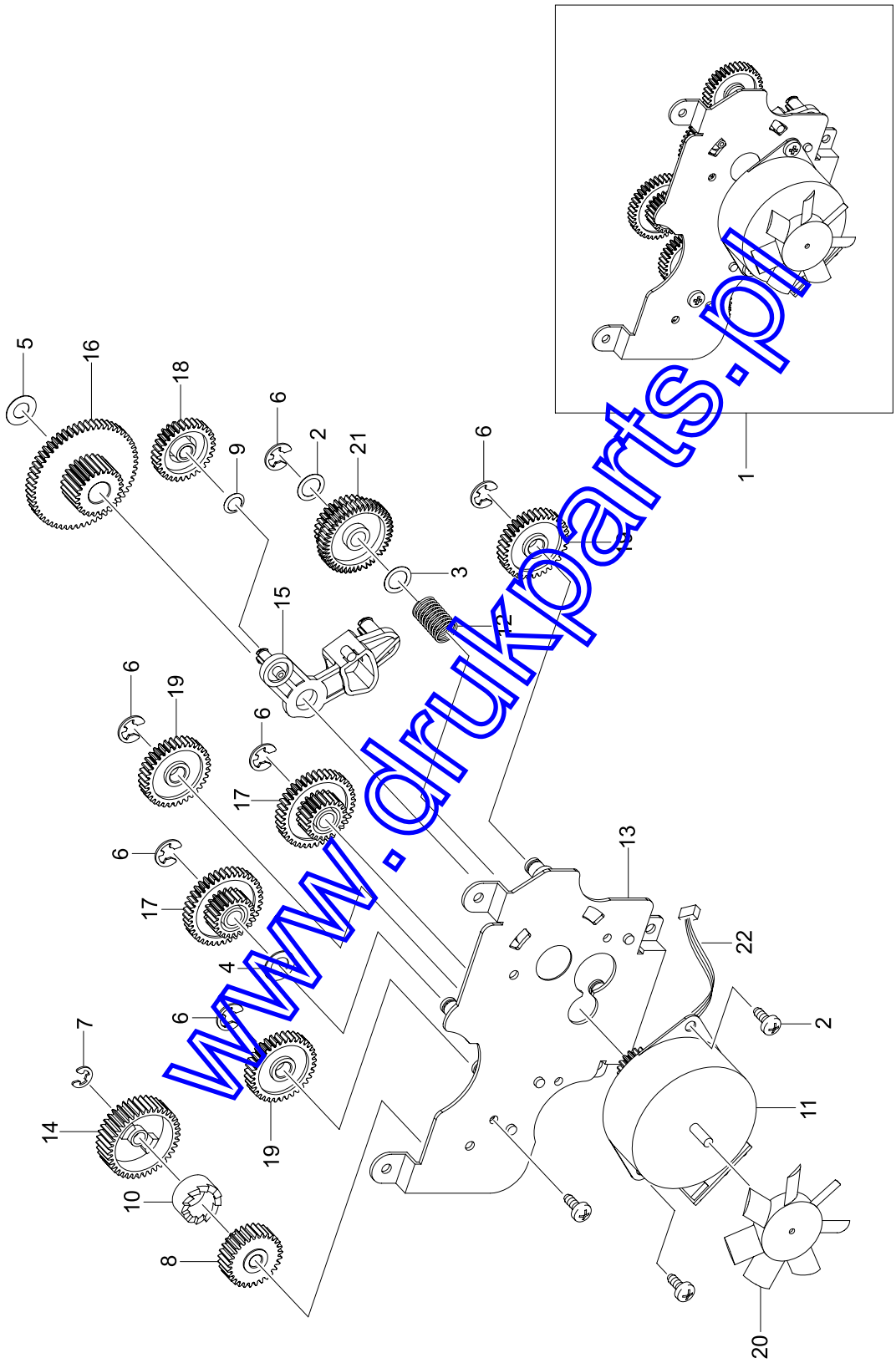

www.drukparts.pl

Drawer#	SEC_Code	Description	QT'y	Service	Remark
8.13 ADF Motor					
8.13-1	JC96-03915A	ELA HOU-ADF MOTOR	1	SA	
8.13-2	6003-000269	SCREW-TAPTITE	1	SA	
8.13-20	JC66-00556A	IMPELLER-ADF	1	SA	
8.13-21	JC66-00557A	GEAR-REMOVE ADF	1	SA	
8.13-22	JC39-00640A	HARNESS-ADF GND	1	SA	
8.1-33	JC63-01148A	SHEET-LIU	1	SA	
8.13-3	6031-000019	WASHER-PLAIN	2	SNA	
8.13-4	6031-000023	WASHER-PLAIN	1	SNA	
8.13-5	6031-001511	WASHER-PLAIN	1	SNA	
8.13-6	6044-000125	RING-E	6	SA	
8.13-7	6044-000159	RING-C	1	SA	
8.13-8	JB66-00101A	GEAR-CLUTCH 29	1	SA	
8.13-9	JB70-00070A	IPR-WASHER WAVE	1	SA	
8.13-10	JB72-00844A	PMO-WHITE CLUTCH SUB 29	1	SA	
8.13-11	JC31-00036A	MOTOR STEP-ADF	1	SA	
8.13-12	JC61-00387A	SPRING ETC-PAD	1	SA	
8.13-13	JC61-01659A	BRACKET-P-GEAR L	1	SA	
8.13-14	JC66-00322A	GEAR-CLUTCH 39	1	SA	
8.13-15	JC66-00454A	LINK-M-SWING ADF	1	SA	
8.13-16	JC66-00455A	GEAR-58/25 ADF	1	SA	
8.13-17	JC66-00456A	GEAR-40/21 ADF	2	SA	
8.13-18	JC66-00457A	GEAR-SWING 31/20 ADF	1	SA	
8.13-19	JC66-00458A	GEAR-IDLE 35 ADF	3	SA	

www.drukparts.pl

8.14 Frame-1

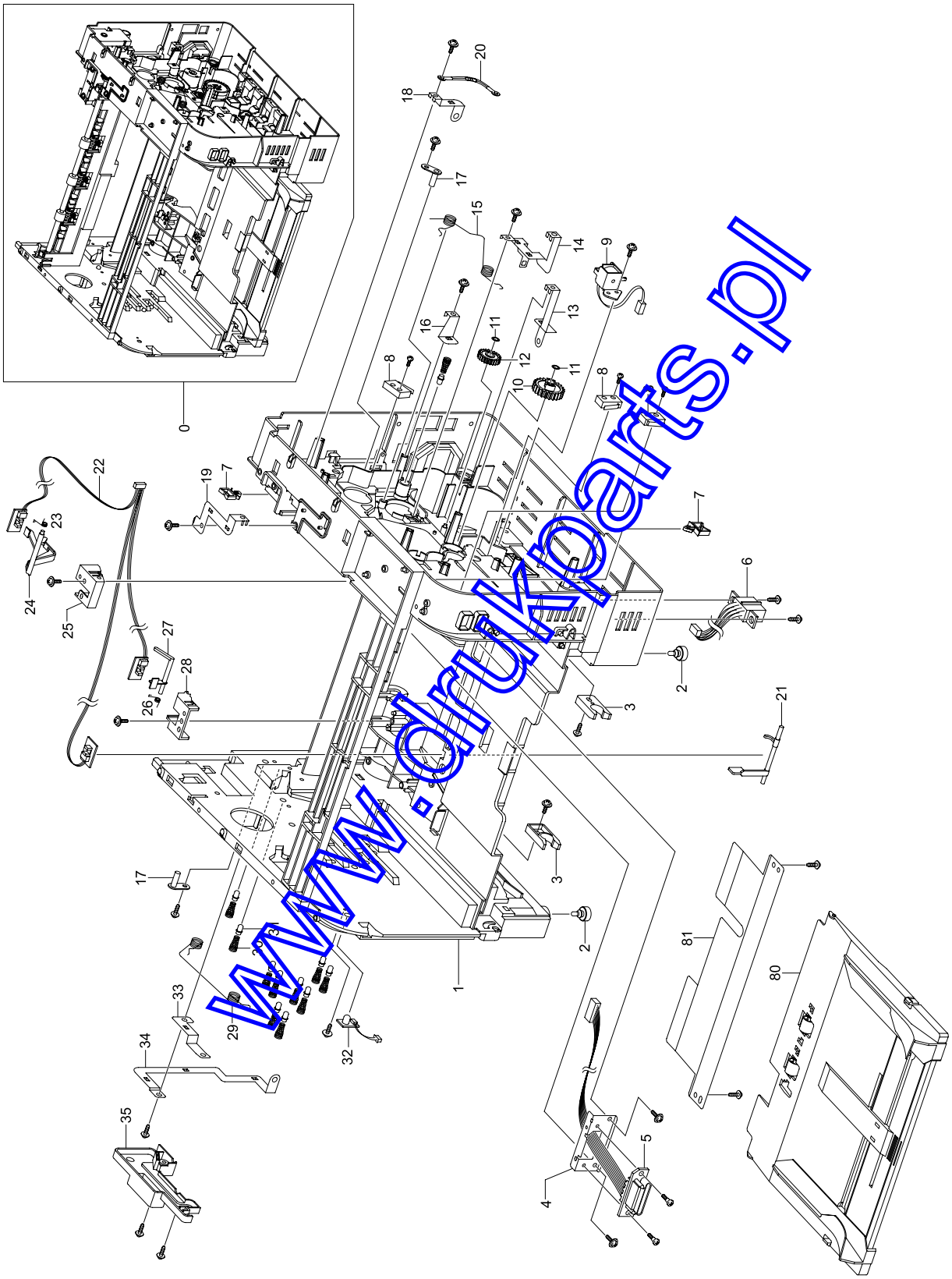

www.drukparts.pl

Frame-2

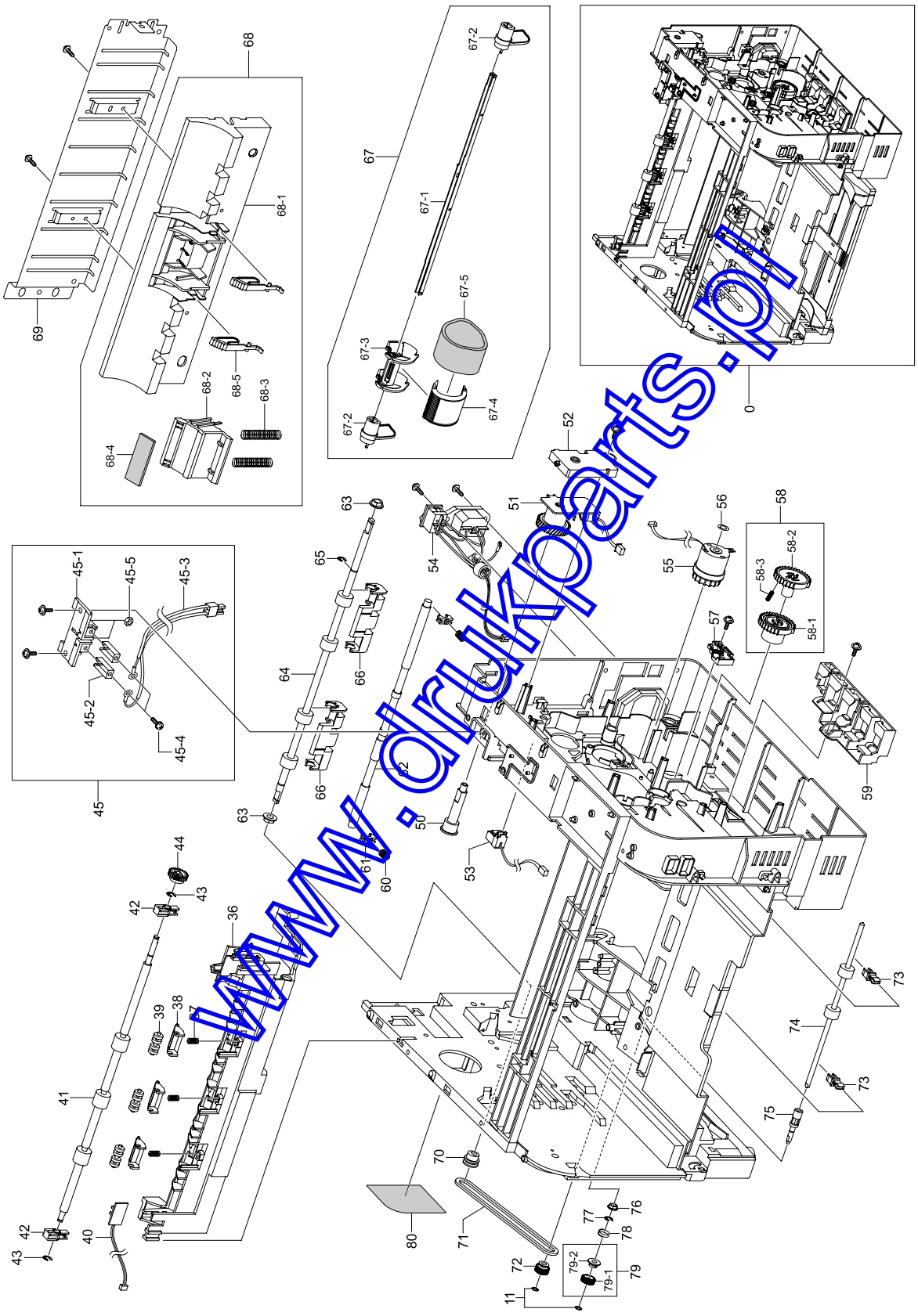

www.drukparts.pl

Drawer#	SEC_Code	Description	QT'y	Service	Remark
8.14 Frame					
8.14-0	JC97-02683A	MEA UNIT-FRAME	1	SA	
8.14-1	JC61-01443A	FRAME-M BASE GOGH	1	SNA	
8.14-2	JC61-40001A	FOOT-ML80	2	SA	
8.14-3	JC66-00050A	CAM-CATCH	2	SA	
8.14-4	JC61-01521A	PLATE-P-DRAW CONNECTOR	1	SNA	
8.14-5	JC39-00488A	CBF HARNESS-MAIN_DRAW	1	SA	
8.14-6	JC39-00565A	CBF HARNESS-ADF_DRAW	1	SA	
8.14-7	6502-001093	CABLE CLAMP	1	SA	
8.14-9	JC33-00015C	SOLENOID-PICK UP	1	SA	
8.14-10	JC66-01056A	GEAR-REGI DRIVE	1	SA	
8.14-11	6044-000001	RING-CS	2	SNA	
8.14-12	JC66-00346A	GEAR-MP/DUP DRV	1	SA	
8.14-13	JC61-01483A	PLATE-P-GROUND LSU	1	SNA	
8.14-14	JC61-01485A	PLATE-P-GROUND REGI	1	SNA	
8.14-15	JC61-01547A	SPRING ETC-OPC LOCK R	1	SA	
8.14-16	JC61-01484A	PLATE-P-GROUND T2	1	SNA	
8.14-17	JC61-01537A	PLATE-P-SHAFT LACK	2	SNA	
8.14-18	JC61-01482A	PLATE-P-GROUND FUSER	1	SNA	
8.14-19	JC61-01489A	PLATE-P-GROUND EXIT	1	SNA	
8.14-20	JC39-00302A	CBF HARNESS-100M_GND	1	SA	
8.14-22	JC96-04021A	ELA HOU-REGI_EMP_MP	1	SNA	
8.14-23	JB61-00076A	SPRING ETC-TORSION DOC (CC2-F)	1	SA	
8.14-24	JC66-01119A	LEVER-M-ACTUATOR EMPTY	1	SNA	
8.14-25	JC61-01481A	HOLDER-M-ACTUATOR EMPTY	1	SNA	
8.14-26	JC61-00018A	SPRING ETC-SENSOR	1	SNA	
8.14-27	JC66-01133A	LEVER-M-ACTUATOR FEED	1	SNA	
8.14-28	JC61-01480A	HOLDER-M-ACTUATOR FEED	1	SNA	
8.14-29	JC61-01546A	SPRING ETC-OPC LOCK L	1	SA	
8.14-32	JC92-01723A	PBA SUB-WASTE_T	1	SA	
8.14-33	JC61-01451A	PLATE-P-GROUND OPC L	1	SNA	
8.14-34	JC61-01486A	PLATE-P-GROUND PICKUP	1	SNA	
8.14-35	JC63-00854A	COVER-M-GROUND OPC	1	SNA	
8.14-36	JC61-01477A	FRAME-M-EXIT	1	SNA	
8.14-37	6107-001163	SPRING-CS	3	SA	
8.14-38	JC61-01568A	HOLDER-M-EXIT F DOWN	3	SNA	
8.14-39	JC66-01149A	ROLLER-EXIT MAIN	3	SA	
8.14-41	JC66-01040A	ROLLER-EXIT F DOWN	1	SNA	
8.14-42	JC61-00829B	HOLDER-BEARING EXIT F/DOWN	2	SA	
8.14-43	6044-000159	RING-C	2	SA	
8.14-44	JC66-00810A	GEAR-EXIT DRV17	1	SA	
8.14-45	JC97-02639A	MEA UNIT-F/TERMINAL	1	SA	
8.14-50	JC66-01207A	SHAFT-M CLUTCH FUSER	1	SA	
8.14-51	JC47-00014A	MEP-CLUTCH CAM	1	SA	
8.14-52	JC61-01566A	HOLDER-M-CLUTCH FUSER	1	SNA	
8.14-53	JC39-00498A	CBF HARNESS-COVER S/W	1	SA	
8.14-54	JC39-00497A	CBF HARNESS-INLET	1	SA	
8.14-55	JC47-00069C	MEP-CLUTCH REGI	1	SA	
8.14-56	6031-001255	WASHER-PLAIN	1	SA	
8.14-58	JC97-02686A	MEA UNIT-PICK UP GEAR	1	SA	
8.14-58-1	JC66-01076A	GEAR-PICK UP A	1	SA	
8.14-58-2	JC66-01077A	GEAR-PICK UP B	1	SA	
8.14-58-3	6107-001167	SPRING-CS	1	SA	
8.14-59	JC61-01478A	GUIDE-M-HARNESS	1	SNA	
8.14-60	JC61-70911A	SPRING ETC-EXIT ROLL FD	2	SA	

www.orukparts.com

Drawer#	SEC_Code	Description	QT'y	Service	Remark
8.14-61	JC61-01548A	HOLDER-M-CAM	1	SNA	
8.14-62	JC66-01120A	SHAFT-FEED IDLE	1	SNA	
8.14-64	JC66-01307A	ROLLER-REGI	1	SNA	
8.14-65	6044-000125	RING-E	2	SA	
8.14-67	JC97-02647A	MEA UNIT-PICKUP ROLL	1	SA	
8.14-67-1	JC66-01080A	SHAFT-P-PICKUP	1	SNA	
8.14-67-2	JC66-01105A	CAM-M-PICK UP	2	SNA	
8.14-67-3	JC61-01151A	HOUSING-M-PICK_U	1	SA	
8.14-67-4	JC61-01173A	HOUSING-M-PICK_UP B	1	SA	
8.14-67-5	JC73-00211A	RUBBER-PICK_UP	1	SA	
8.14-68-1	JC61-01473A	GUIDE-M-PICK UP	1	SNA	
8.14-68-2	JC61-01538A	HOLDER-M-PAD	1	SNA	
8.14-68-5	JC66-00815A	LEVER-M-KICKER P/U	2	SNA	
8.14-69	JC61-01533A	PLATE-P-PICK UP	1	SNA	
8.14-73	JC72-00382B	PMO-BUSHING FEED	2	SA	
8.14-74	JC66-00598A	ROLLER-FEED	1	SA	
8.14-75	JC66-01213A	SHAFT-M-FEED	1	SNA	
8.14-77	6044-000001	RING-CS	2	SNA	
8.14-79-1	JC66-01212A	GEAR-FEED	1	SNA	
8.14-79-2	JC61-01667A	BUSH-M CLUTCH	1	SNA	
8.14-80	JC97-02685A	MEA UNIT-MP	1	SA	
8.14-81	JC63-01147A	SHEET-MANUAL	1	SA	

www.drukparts.pl

8.15 Main Driver-1

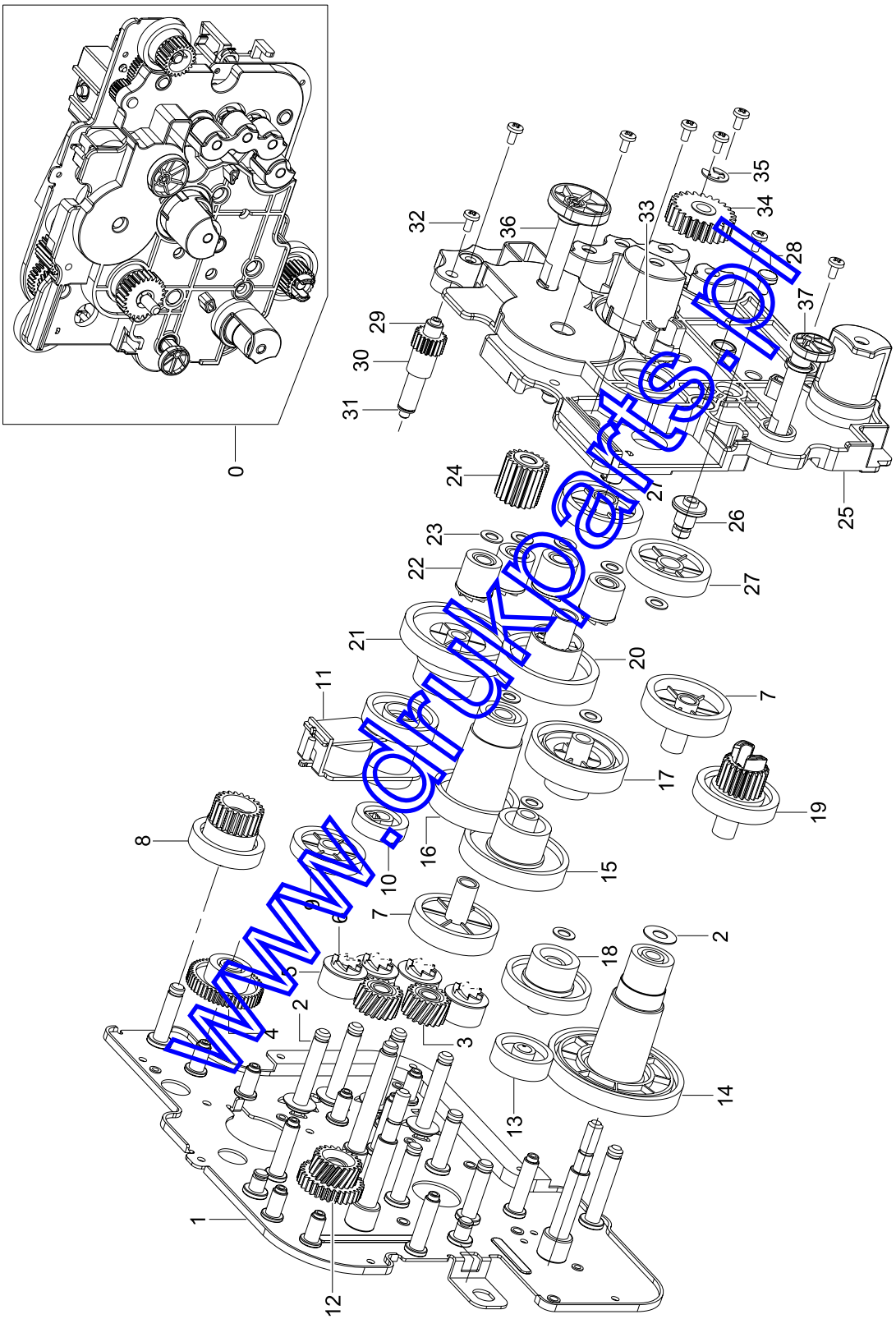

www.drukparts.pl

Main Driver-2

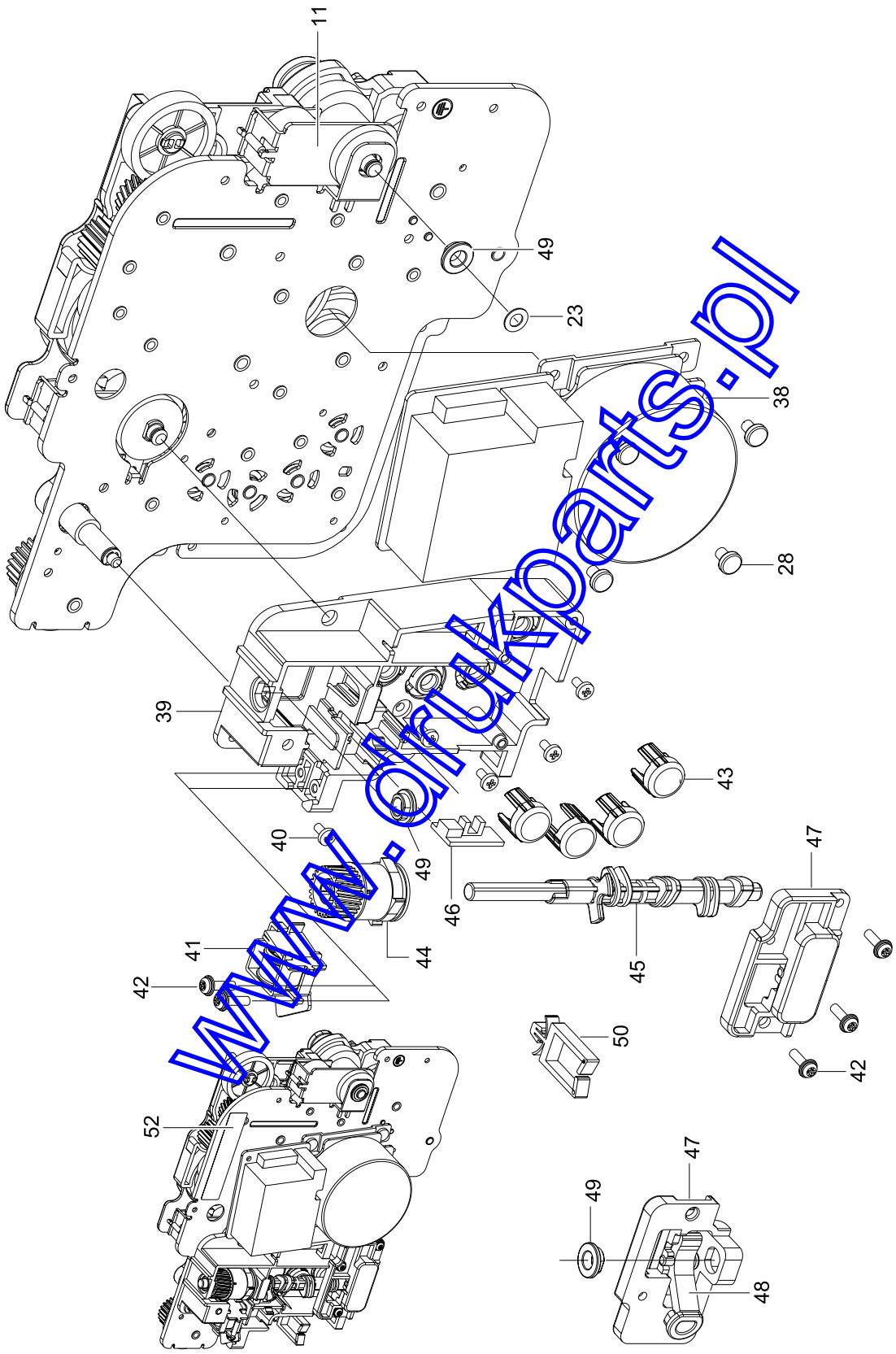

www.drukparts.pl

Drawer#	SEC_Code	Description	QT'y	Service	Remark
8.15 Main Driver					
8.15-0	JC96-03608A	ELA UNIT-DRIVE MAIN	1	SA	
8.15-1	JC61-01450A	BRACKET-P-DRIVE MOTOR	1	SNA	
8.15-2	6031-001528	WASHER-PLAIN	5	SA	
8.15-3	JC66-01042A	GEAR-IDLE DEVE Z19	2	SA	
8.15-4	JC66-01052A	GEAR-RDCN DEVE CAM	1	SA	
8.15-5	JC66-01041A	GEAR-DEVE COUPLING	4	SA	
8.15-6	6107-001271	SPRING-CS	4	SA	
8.15-7	JC66-01047A	GEAR-IDLE Z39	2	SA	
8.15-8	JC66-01065A	GEAR-TONER DRIVE	1	SA	
8.15-9	JC66-01046A	GEAR-IDLE Z33	1	SA	
8.15-10	JC66-00763A	GEAR-M-PICK UP IDLE	1	SA	
8.15-11	JC47-00007E	MEP-CLUTCH CAM	2	SA	
8.15-12	JC66-01208A	GEAR-RDCN FUSER CAM	1	SA	
8.15-13	JC66-01045A	GEAR-IDLE ITB Z43	1	SA	
8.15-14	JC66-01048A	GEAR-ITB DRIVE	1	SA	
8.15-15	JC66-01054A	GEAR-RDCN OPC	1	SA	
8.15-16	JC66-01049A	GEAR-OPC DRIVE	1	SA	
8.15-17	JC66-01051A	GEAR-RDCN DEVE	1	SA	
8.15-18	JC66-01055A	GEAR-RDCN P_PATH	1	SA	
8.15-19	JC66-01050A	GEAR-PICK UP DRIVE	1	SA	
8.15-20	JC66-01044A	GEAR-FUSER DRIVE 1	1	SA	
8.15-21	JC66-01053A	GEAR-RDCN EXIT	1	SA	
8.15-22	JC66-01043A	GEAR-DEVE DRIVE	4	SA	
8.15-23	6031-001255	WASHER-PLAIN	9	SA	
8.15-24	JC66-00771A	GEAR-_M_IDLE PICKUP	1	SA	
8.15-25	JC61-01459A	BRACKET-M-DRIVE FRONT	1	SNA	
8.15-26	JC66-01061A	SHAFT-IDLE D8	1	SNA	
8.15-27	JC66-01064A	GEAR-IDLE Z37	2	SA	
8.15-28	6003-000301	SCREW-TAPTITE	4	SNA	
8.15-29	JC66-01060A	SHAFT-WORM GEAR	1	SNA	
8.15-30	JC66-01057A	GEAR-WORM DEVE CAM	1	SA	
8.15-31	6044-000159	RING-C	1	SA	
8.15-32	6001-000130	SCREW-MACHINE	7	SNA	
8.15-33	JC66-01070A	LATCH-M-HUB CLUTCH	1	SNA	
8.15-34	JC66-01155A	GEAR-FUSER RDCN OUT V	1	SNA	
8.15-35	6044-000231	RING-E	1	SA	
8.15-36	JC66-01068A	SHAFT-M-T2 CAM	1	SA	
8.15-37	JC66-01067A	SHAFT-M-ITB CLEAN CAM	1	SA	
8.15-38	JC31-00041A	MOTOR DC-DEVE DRIVE	1	SA	
8.15-39	JC33-00015C	SOLENOID-PICK UP	1	SA	
8.15-40	6003-000269	SCREW-TAPTITE	5	SA	
8.15-41	JC61-01458A	BRACKET-M-DEVE CAM	1	SNA	
8.15-42	6003-000196	SCREW-TAPTITE	2	SA	
8.15-43	JC67-00130A	CAP-M-PUSH COUPLING	4	SA	
8.15-44	JC97-01788B	MEA UNIT-CLUTCH DEV	1	SA	
8.15-45	JC66-01066A	SHAFT-M-DEVE CAM	1	SA	
8.15-46	JC92-01720A	PBA SUB-DEVE_HOME	1	SA	
8.15-47	JC61-01453A	HOLDER-M-LINK BLACK	1	SA	
8.15-48	JC66-01097A	LINK-M-PUSH BLACK CAP	1	SA	
8.15-49	JC61-00699A	BUSH-D6/L4	3	SA	
8.15-51	0205-001095	GREASE-BEARING		SNA	
8.15-52	JF68-10532B	LABEL(P)-BAR CODE	1	SNA	

www.drukparts.pl

8.16 LSU Cover

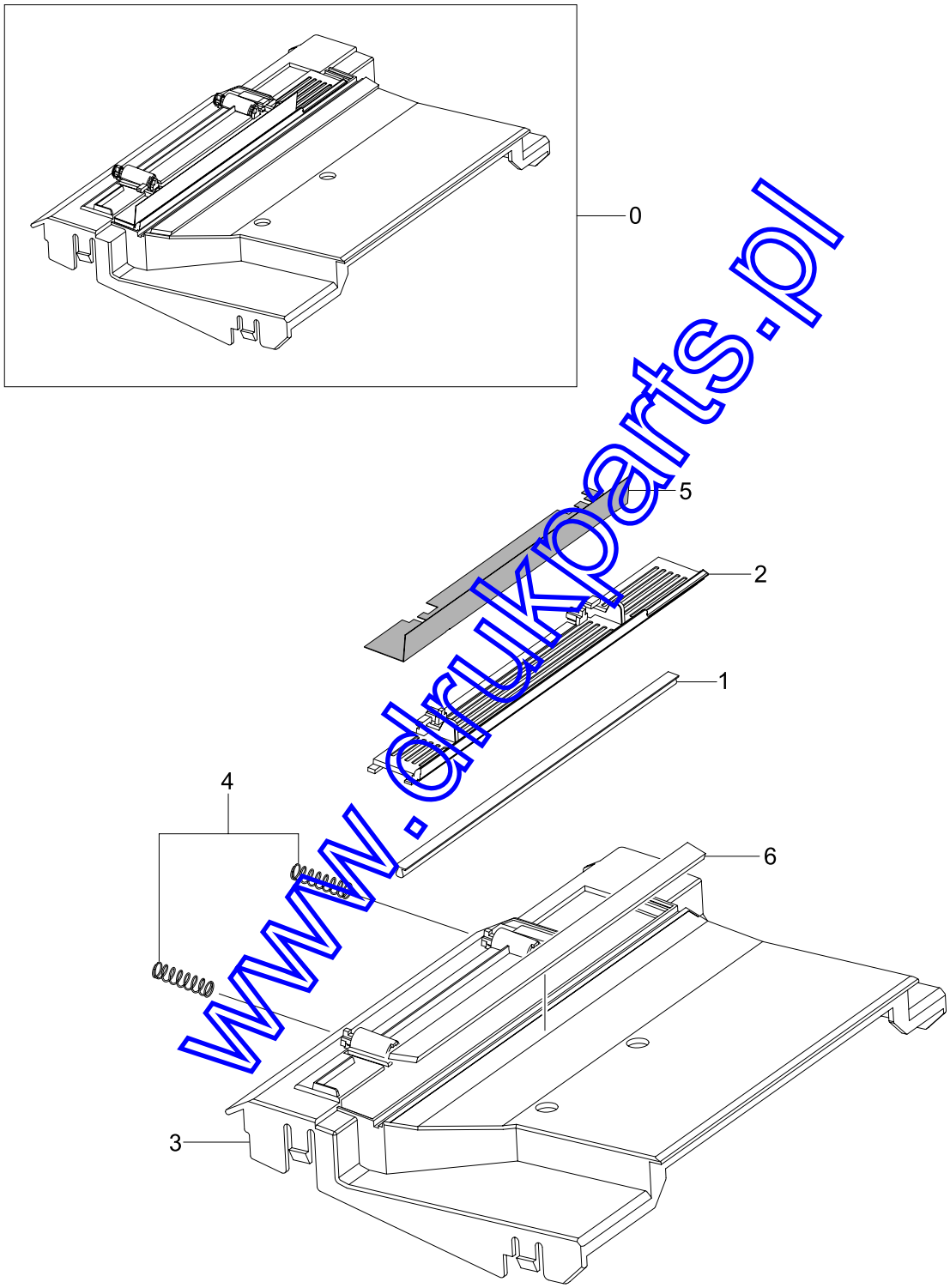

www.drukparts.pl

Drawer#	SEC_Code	Description	QT'y	Service	Remark
8.16 LSU Cover					
8.16-0	JC97-02656A	MEA UNIT-COVER LSU	1	SA	
8.16-1	JC67-00168A	BRUSH-LSU	1	SNA	
8.16-2	JC64-00267A	SHUTTER-LSU	1	SNA	
8.16-3	JC63-00839A	COVER-M-LSU	1	SNA	
8.16-4	6107-001295	SPRING-CS	2	SNA	
8.16-5	JC63-01093A	SHEET-LSU FRONT	1	SNA	
8.16-6	JC62-00338A	SEAL-COVER LSU	1	SNA	

www.drukparts.pl

8.17 ITB Unit

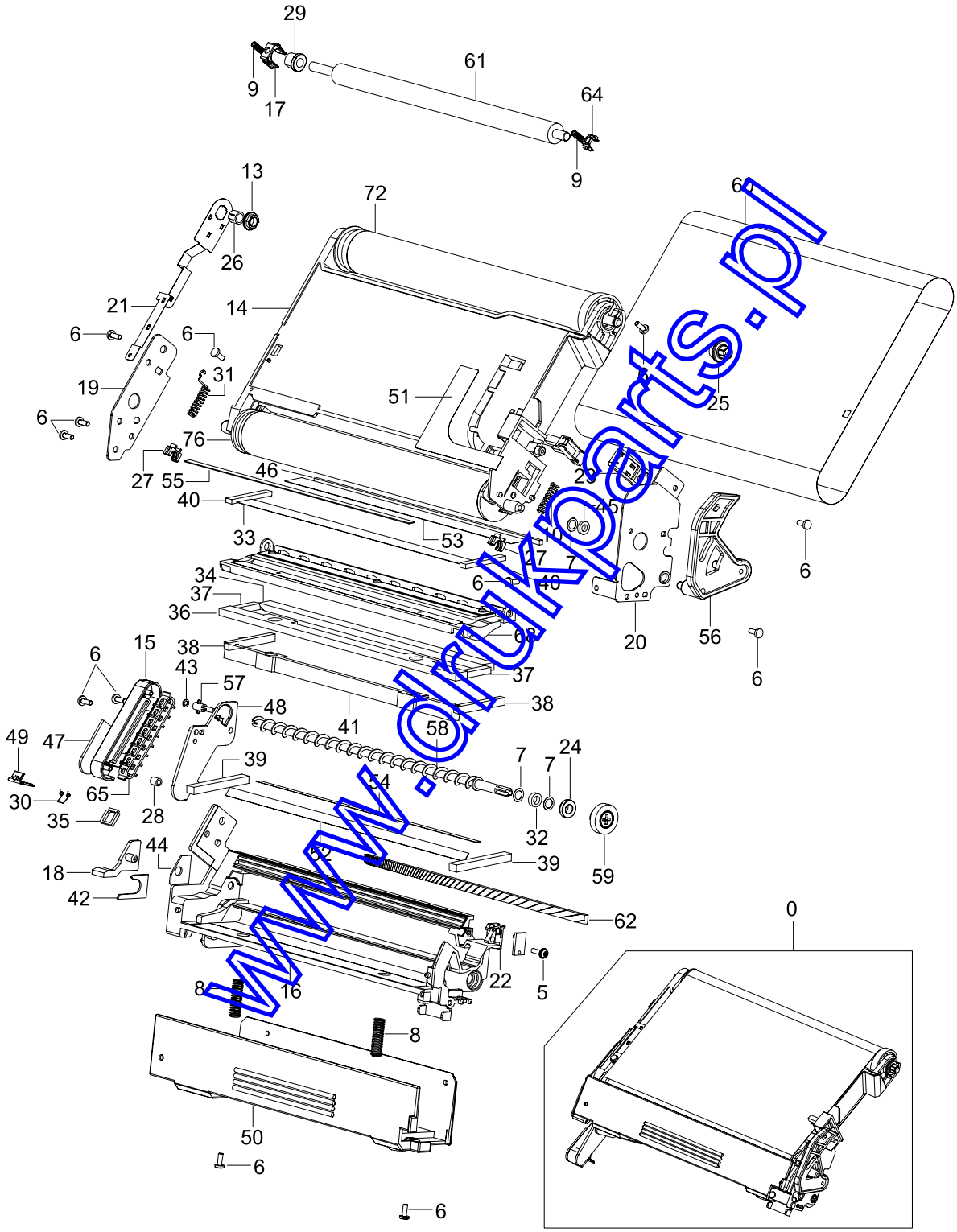

www.ukparts.pl

Drawer#	SEC_Code	Description	QT'y	Service	Remark
8.17 ITB Unit					
8.17-0	JC96-03611A	ELA UNIT-ITB_SET	1	SA	
8.17-4	0604-001257	PHOTO-INTERRUPTER	1	SNA	
8.17-5	6003-000282	SCREW-TAPTITE	13	SNA	
8.17-6	6031-000019	WASHER-PLAIN	3	SNA	
8.17-7	6107-001287	SPRING-CS	2	SNA	
8.17-9	6107-001289	SPRING-CS	1	SNA	
8.17-10	JC02-00054A	TONER-BLACK		SNA	
8.17-11	JC39-00489A	CBF HARNESS-ITB_JOINT	1	SNA	
8.17-12	JC39-00502A	CBF HARNESS-ITB_HOME	1	SNA	
8.17-13	JC61-00699A	BUSH-D6/L4	1	SA	
8.17-14	JC61-01494A	FRAME-M-ITB	1	SNA	
8.17-15	JC61-01495A	FRAME-M-WASTE ITB	1	SNA	
8.17-16	JC61-01497A	HOUSING-M-CLEANING ITB	1	SNA	
8.17-17	JC61-01498A	HOLDER-M-BUSH CHARGE	1	SNA	
8.17-18	JC61-01499A	GUIDE-M-POLE ITB	1	SNA	
8.17-19	JC61-01502A	BRACKET-P-HOUSING LEFT	1	SNA	
8.17-20	JC61-01503A	BRACKET-P-HOUSING RIGHT	1	SNA	
8.17-21	JC61-01504A	PLATE-P-GND ITB	1	SNA	
8.17-22	JC61-01505A	HOLDER-M-PTL	1	SNA	
8.17-23	JC61-01506A	HOLDER-M-HOME SENSOR	1	SNA	
8.17-24	JC61-01536A	BUSH-M-CHARGE CLEANING	1	SNA	
8.17-25	JC61-01539A	BUSH-M-DRIVE ITB	1	SNA	
8.17-26	JC61-01540A	BUSH-M-ITB	1	SNA	
8.17-27	JC61-01541A	BUSH-M-TR ITB	2	SNA	
8.17-28	JC61-01542A	BUSH-M-IDLER WASTE BELT	1	SNA	
8.17-29	JC61-01543A	BUSH-CHARGE LEFT	1	SNA	
8.17-30	JC61-01701A	SPRING ETC-SHUTTER	1	SNA	
8.17-31	JC61-01704A	SPRING ETC-GROUND ITB	1	SNA	
8.17-32	JC62-00210A	SEAL-AUGER OPC	1	SNA	
8.17-33	JC62-00212A	SEAL-BELT ITB	1	SNA	
8.17-34	JC62-00213A	SEAL-LOW ITB	1	SNA	
8.17-35	JC62-00217A	SEAL-COVER WASTE	1	SNA	
8.17-36	JC62-00219A	SEAL-BACK ITB	1	SNA	
8.17-37	JC62-00221A	SEAL-BACK ITB RIGHT	2	SNA	
8.17-38	JC62-00222A	SEAL-SIDE ITB LEFT	2	SNA	
8.17-39	JC62-00223A	SEAL-SIDE ITB RIGHT	2	SNA	
8.17-40	JC62-00229A	SEAL-BLADE ITB LEFT	2	SNA	
8.17-41	JC62-00232A	SEAL-TOP ITB	1	SNA	
8.17-42	JC62-00257A	SEAL-FRAME WASTE ITB	1	SNA	
8.17-43	JC62-00258A	SEAL-WASTE OPC	1	SNA	
8.17-44	JC62-00281A	SEAL-HOUSING ITB L	1	SNA	
8.17-45	JC62-00282A	SEAL-HOUSING ITB R	1	SNA	
8.17-46	JC62-00326A	SEAL-WASTE SIDE	1	SNA	
8.17-47	JC63-00857A	COVER-M-WASTE ITB	1	SNA	
8.17-48	JC63-00859A	COVER-M-WASTE EXIT	1	SNA	
8.17-49	JC63-00862A	COVER-M-HANDLE ITB	1	SNA	
8.17-50	JC63-01045A	SHEET-FRAME ITB	1	SNA	
8.17-52	JC63-01124A	SHEET-HOUSING ITB F	1	SNA	
8.17-53	JC63-01176A	SHEET-BLADE ITB	1	SNA	
8.17-54	JC66-01082A	ARM-M-BLADE ITB	1	SNA	
8.17-55	JC66-01083A	SHAFT-M-BELT WASTE	1	SNA	
8.17-56	JC66-01085A	SHAFT-M-AUGER ITB	1	SNA	
8.17-57	JC66-01087A	GEAR-AUGER ITB	1	SNA	
8.17-58	JC66-01112A	DRUM-ITB BELT	1	SNA	
8.17-59	JC66-01131A	ROLLER-T1	1	SNA	
8.17-60	JC67-00027A	LENS-PTL	1	SA	

www.tukparts.ir

Drawer#	SEC_Code	Description	QT'y	Service	Remark
8.17-61	JC68-10914D	LABEL(P)-SERIAL NO	1	SNA	
8.17-62	JC72-40332A	PMO-BUSHING_CHARGE	1	SNA	
8.17-63	JC73-00222A	RUBBER-BELT WASTE ITB	1	SNA	
8.17-64	JC92-01709A	PBA SUB-ITB_JOINT	1	SNA	
8.17-71	JC92-01724A	PBA SUB-PTL	1	SNA	
8.17-75	JC97-02645A	MEA UNIT-BLADE ITB	1	SNA	
8.17-81	JC97-02646A	MEA UNIT-ROLL DRV ITB	1	SNA	
8.17-85	JC97-02695A	MEA UNIT-ROLL IDL ITB	1	SNA	

www.drukparts.pl

8.18 OPC DEVE

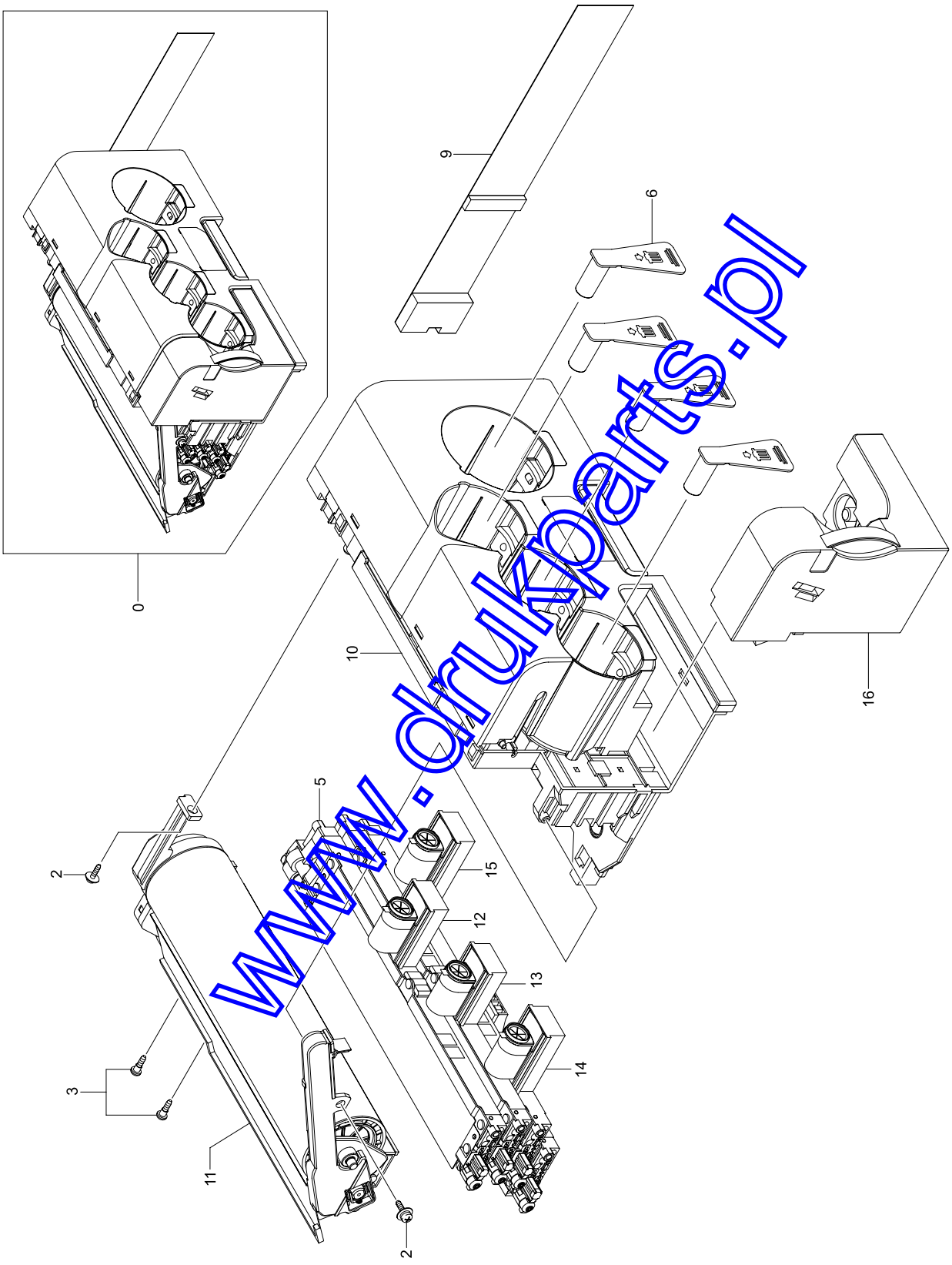

www.drukparts.pl

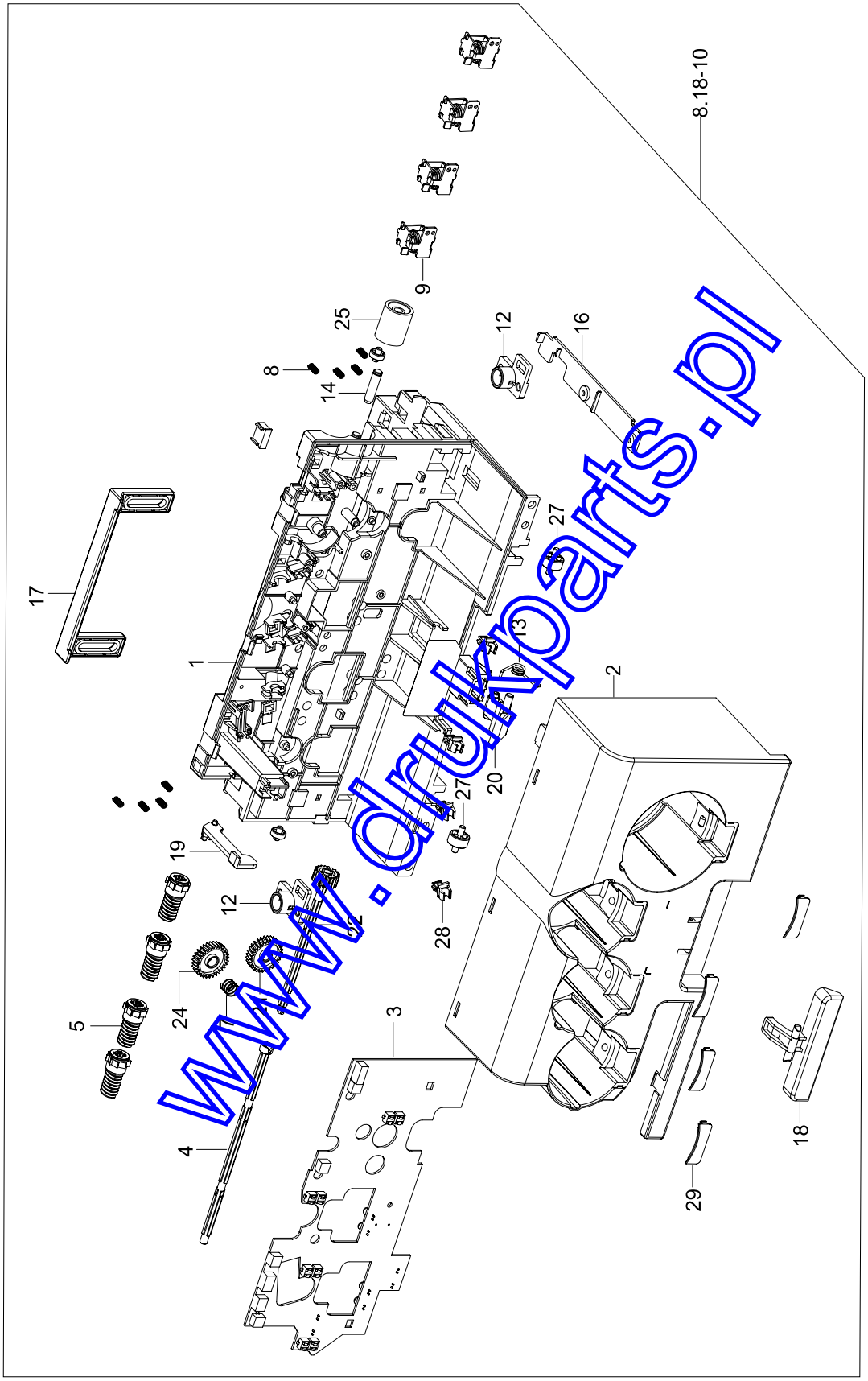

www.drukparts.pl

Drawer#	SEC_Code	Description	QT'y	Service	Remark
8.18 OPC DEVE					
8.18-0	JC96-03610A	ELA UNIT-OPC DEV_SET	1	SNA	
8.18-0	JC96-03610C	ELA UNIT-OPC DEV_SET; only KOREA	1	SNA	
8.18-2	6006-001078	SCREW-TAPTITE	2	SNA	
8.18-4	JC39-00499A	CBF HARNESS-JOIN_DRAW	1	SNA	
8.18-6	JC67-00199A	CAP-DEVE	4	SNA	
8.18-7	JC68-01708A	LABEL-INFORMATION	1	SNA	
8.18-8	JC68-10914D	LABEL(P)-SERIAL NO	1	SNA	
8.18-9	JC69-01013A	CUSHION-DEVE	1	SNA	
8.18-10	-	ELA UNIT-DEV MAIN SET	1	SNA	
8.18-10-1	JC61-01520A	FRAME-M-DEVE MAIN	1	SNA	
8.18-10-2	JC63-00853A	COVER-M-TONER BOTTLE	1	SNA	
8.18-10-3	JC92-01708A	PBA SUB-DEVE_JOINT	1	SNA	
8.18-10-4	JC66-01115A	GEAR-WORM AGITATOR	1	SNA	
8.18-10-5	JC97-01788C	MEA UNIT-CLUTCH TONER	4	SNA	
8.18-10-6	JC66-01116A	GEAR-IDLE M08Z30L	1	SNA	
8.18-10-7	6107-001285	SPRING-CS	1	SNA	
8.18-10-8	6107-001292	SPRING-CS	9	SNA	
8.18-10-9	JC33-00018A	SOLENOID-TONER	1	SNA	
8.18-10-12	JC61-01573A	HOLDER-SUPPORT	2	SNA	
8.18-10-13	JC61-01687A	SPRING ETC-LOCK	1	SNA	
8.18-10-14	JC61-01706A	STUD-GEAR ITB	1	SNA	
8.18-10-16	JC63-00897A	COVER-M-WIRE	1	SNA	
8.18-10-17	JC64-00217A	HANDLE-M-UNIT	1	SNA	
8.18-10-18	JC64-00229A	HANDLE-LOCK	1	SNA	
8.18-10-19	JC66-01094A	LEVER-M-WASTE SENSOR	1	SNA	
8.18-10-20	JC66-01103A	LEVER-M-LOCK DEVE FRAME	1	SNA	
8.18-10-21	JC66-01113A	GEAR-IDLE M08Z30R	1	SNA	
8.18-10-22	JC66-01114A	GEAR-DRIVE Z20	1	SNA	
8.18-10-25	JC66-01117A	GEAR-IDLE ITB	1	SNA	
8.18-10-27	JC66-01143A	ROLLER-SLIDE B	2	SNA	
8.18-10-28	JC72-00382B	PMO-BUSHING FEED	4	SA	
8.18.10-29	JC67-00191A	CAP-DUMMY	4	SNA	
8.18-11	-	MEA UNIT-OPC SET	1	SNA	
8.18-12	-	MEA UNIT-DEV Y	1	SNA	
8.18-13	-	MEA UNIT-DEV M	1	SNA	
8.18-14	-	MEA UNIT-DEV C	1	SNA	
8.18-15	-	MEA UNIT-DEV K	1	SNA	
8.18-16	-	MEA UNIT-TONER WASTE	1	SNA	

www.ahukparts.ir

8.19 Fuser Ass'y

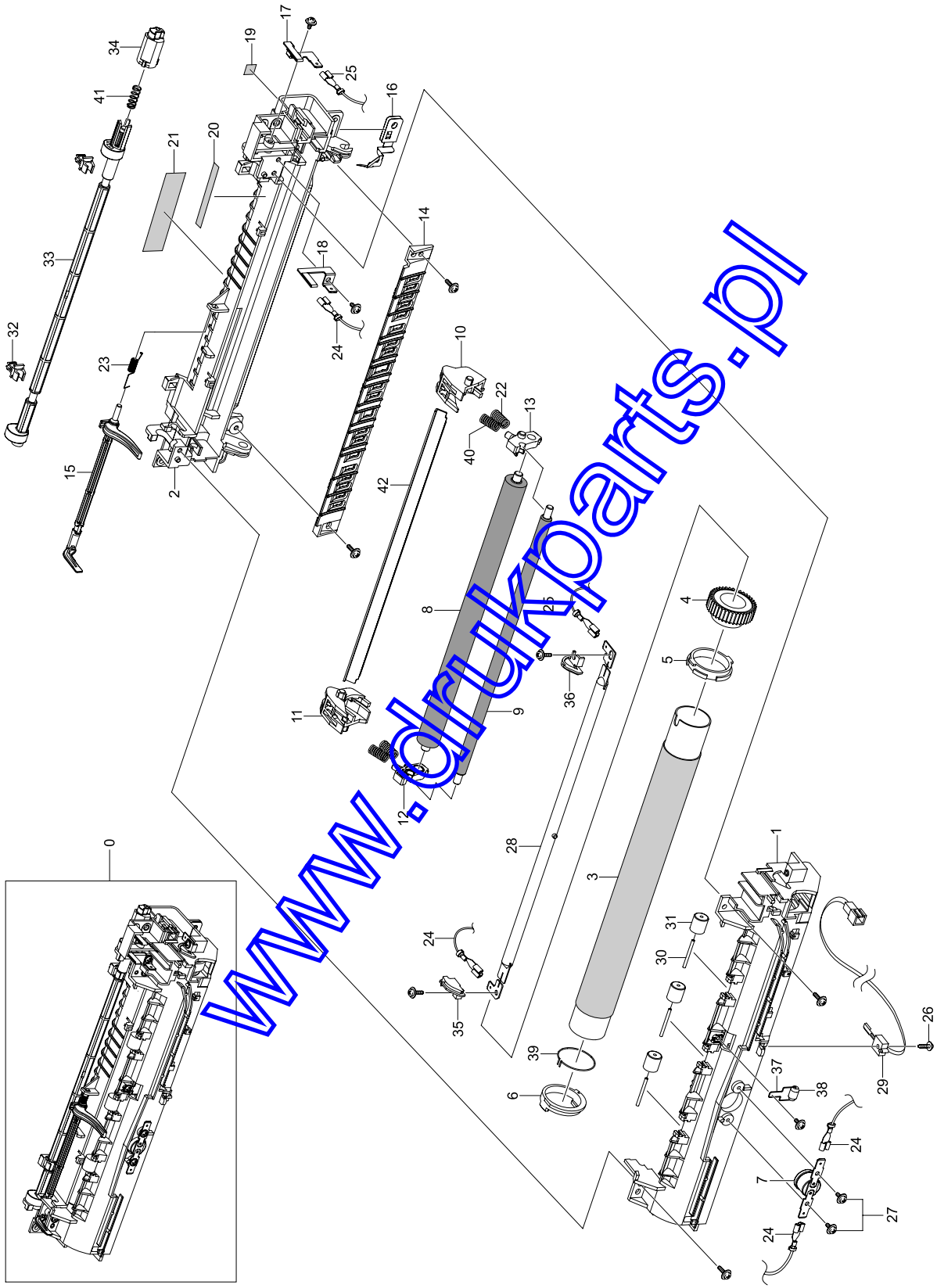

www.drukparts.pl

Drawer#	SEC_Code	Description	QT'y	Service	Remark
8.19 Fuser Ass'y					
8.19-0	JC96-04088B	ELA UNIT-FUSER	1	SA	AC 110V
8.19-0	JC96-04088A	ELA UNIT-FUSER	1	SA	AC 220V
8.19-1	JC61-01474A	FRAME-M-UPPER FUSER	1	SNA	
8.19-2	JC61-01475A	FRAME-M-LOWER FUSER	1	SNA	
8.19-3	JC66-01078A	ROLLER-HEAT	1	SNA	
8.19-4	JC66-00669A	GEAR-FUSER	1	SA	
8.19-5	JC66-10902A	BEARING-H/R L	1	SA	
8.19-6	JC72-00814A	PMO-BEARING H/R-F	1	SA	
8.19-7	4712-001027	THERMOSTAT	1	SA	
8.19-8	JC66-01079A	ROLLER-PRESSURE	1	SNA	
8.19-9	JC66-01111A	ROLLER-PRESSURE SHAFT	1	SNA	
8.19-10	JC61-01490A	HOLDER-M-BUSH 2PR_R	1	SNA	
8.19-11	JC61-01491A	HOLDER-M-BUSH 2PR_L	1	SNA	
8.19-12	JC61-01534A	BUSH-M-2PR L	1	SNA	
8.19-13	JC61-01535A	BUSH-M-2PR R	1	SNA	
8.19-14	JC61-01522A	GUIDE-M-INPUT FUSER	1	SNA	
8.19-15	JC66-01222A	LEVER-M ACTUATOR EXIT	1	SNA	
8.19-16	JC61-01476A	PLATE-P-GROUND FUSER	1	SNA	
8.19-17	JC70-00518A	ELECTRODE-P-AC R	1	SNA	
8.19-18	JC70-00519A	ELECTRODE-P-AC L	1	SNA	
8.19-19	JC68-00408A	LABEL(R)-LV FUSER	1	SNA	
8.19-20	JC68-01134A	LABEL(P)-BLANK(FUSER)	1	SNA	
8.19-21	JC68-01581A	LABEL(P)-CAUTION HOT	2	SNA	
8.19-22	6107-001246	SPRING-CS	2	SNA	
8.19-23	JC61-01271A	SPRING ETC-ACTUATOR	1	SA	
8.19-24	JC39-00500A	CBF HARNESS-FUSE_LINK1	2	SA	
8.19-25	JC39-00501A	CBF HARNESS-FUSE_LINK2	1	SA	
8.19-28	4713-001209	LAMP-HALOGEN	2	SA	AC 110V
8.19-28	4713-001210	LAMP-HALOGEN	2	SA	AC 220V
8.19-29	1404-001368	THERMISTOR-NTC ASSY	1	SA	
8.19-30	JC70-00064A	IPR-PIN ROLLER EXIT	3	SNA	
8.19-31	JC72-20902A	PEX-ROLLER F/UP(2)	3	SA	
8.19-32	JC72-00382A	PMO-BUSHING TX	2	SNA	
8.19-33	JC66-01206A	SHAFT-M-CAM FUSER	1	SNA	
8.19-34	JC61-01647A	HOLDER-M-SHAFT FUSER	1	SNA	
8.19-35	JC66-01147A	LEVER-M-RELEASE	1	SNA	
8.19-36	JC66-01148A	LEVER-M-LINK FUSER	1	SA	
8.19-37	JC66-01231A	ROLLER-DUMMY	1	SNA	
8.19-38	6107-001290	SPRING-CS	1	SA	
8.19-39	JC61-01679A	SPRING ETC-GROUND	1	SA	
8.19-40	6107-001267	SPRING-CS	2	SA	
8.19-41	6107-001290	SPRING-CS	1	SA	
8.19-42	JC97-02778A	MEA UNIT-GUIDE PR	1	SNA	

www.simkparts.com

8.20 Cassette

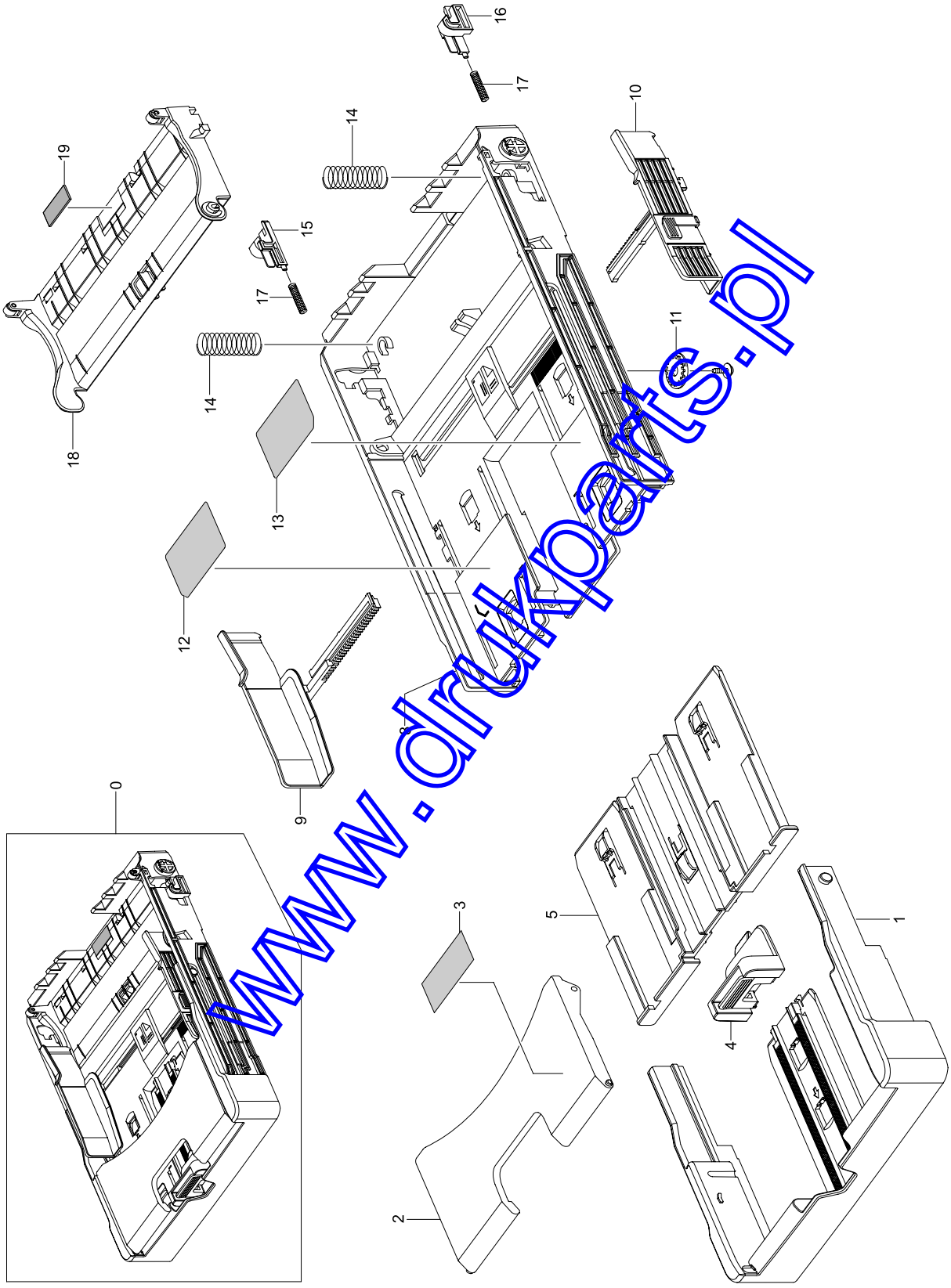

www.drukparts.pl

Drawer#	SEC_Code	Description	QT'y	Service	Remark
8.20 Cassette					
8.20-0	JC97-02332A	MEA-UNIT CASSETTE	1	SA	
8.20-0	JC97-02332C	MEA-UNIT CASSETTE; only KOREA	1	SA	
8.20-1	JC61-01530C	MEA-UNIT CASSETTE	1	SNA	
8.20-2	JG61-70531A	SPRING ETC-LOCKER,PLATE	2	SA	
8.20-3	JC64-00222A	LOCKER-M-KNOCK UP R	1	SA	
8.20-4	JC64-00223A	LOCKER-M-KNOCK UP L	1	SA	
8.20-5	JC97-02218A	MEA UNIT-PLATE KNOCK_UP	1	SA	
8.20-6	6107-001240	SPRING-CS	2	SA	
8.20-7	JC70-00516A	ADJUST-M-CASSETTE R	1	SA	
8.20-8	JC70-00517A	ADJUST-M-CASSETTE L	1	SA	
8.20-9	JG66-40003A	GEAR-PINION	1	SA	
8.20-10	6002-000440	SCREW-TAPPING	1	SNA	
8.20-13	JC63-00869C	TRAY-M-EXTENSION SMALL	1	SNA	
8.20-13	JC63-00869A	TRAY-M-EXTENSION SMALL; Oonly KOREA	1	SNA	
8.20-14	JC63-00855A	COVER-M-CASSETTE	1	SNA	
8.20-16	JC68-01679A	LABEL-INSTRUCTION	1	SNA	
8.20-17	JC68-01680A	LABEL-INSTRUCTION	1	SNA	
8.20-18	JF68-10532B	LABEL(P)-BAR CODE	1	SNA	

www.drukparts.pl