8. Exploded Views and Parts List (CLP-650N/SEE)

Contents

8.1 Main 8-2
8.2 Front Cover 8-3
8.3 Top Cover 8-4
8.4 Right Cover 8-5
8.5 Base Frame 8-6
8.6 Main Frame 8-7
8.7 Fuser 8-8
8.8 Main Drive 8-9
8.9 MPF 8-10
8.10 Pick Up 8-11
8.11 Guide Paper 8-12
8.12 Cassette Unit 8-13
8.13. Cassette(SCF) 8-14
8.14. SCF 8-15
8.15. Guide Upper(SCF) 8-16
8.16. Guide Lower(SCF) 8-17

www.orukparts.pl

Part Number & Description format.

Part numbers and descriptions are defined according to a company standard. The information below will help you to understand the part number format and assist when ordering spare parts.

- **There are two types of Part number format.**

●●●●-●●●●●●	ex) 2007-007961	R-CHIP
■■●●-●●●●■ (It shows part specific)	ex) JB96-01268A	ELA UNIT-COVER TOP

(● : number ■ : letter)

Type 1 : This format is used throughout Samsung on all product ranges. Typically it is used for small components and electronic parts.

Type 2 : This format is controlled by individual Samsung Divisions and is used on specific products, typically for mechanical parts. Type 2 format part numbers fall into 2 categories:

- **A/S privately used part :** It is only used for A/S .
- **Ass'y part :** Assemblies consisting of 2 or more parts. Also used for Service manuals, user guides and diagrams.

• Ass'y parts and A/S privately used Parts can be distinguished by the part Code and Description. They are always Type 2 format. The 2 leading characters indicate private or assembly parts.

DIVISION	PART CODE	DESCRIPTION
A/S Private	**81-****** (JB81-00039A)	AS-********** (AS-USE)
ASS'Y Part	**75-****** (JB75-00068A)	MEC-******** (MEC-CHUTE)
ASS'Y Part	**92-****** (JB92-01131A)	PBA ********* (PBA MAIN-CONTROLLER)
ASS'Y Part	**97-****** (JB97-01089A)	MEA ********* (MEA UNIT-PULLEY IDLE)

8.1 Main

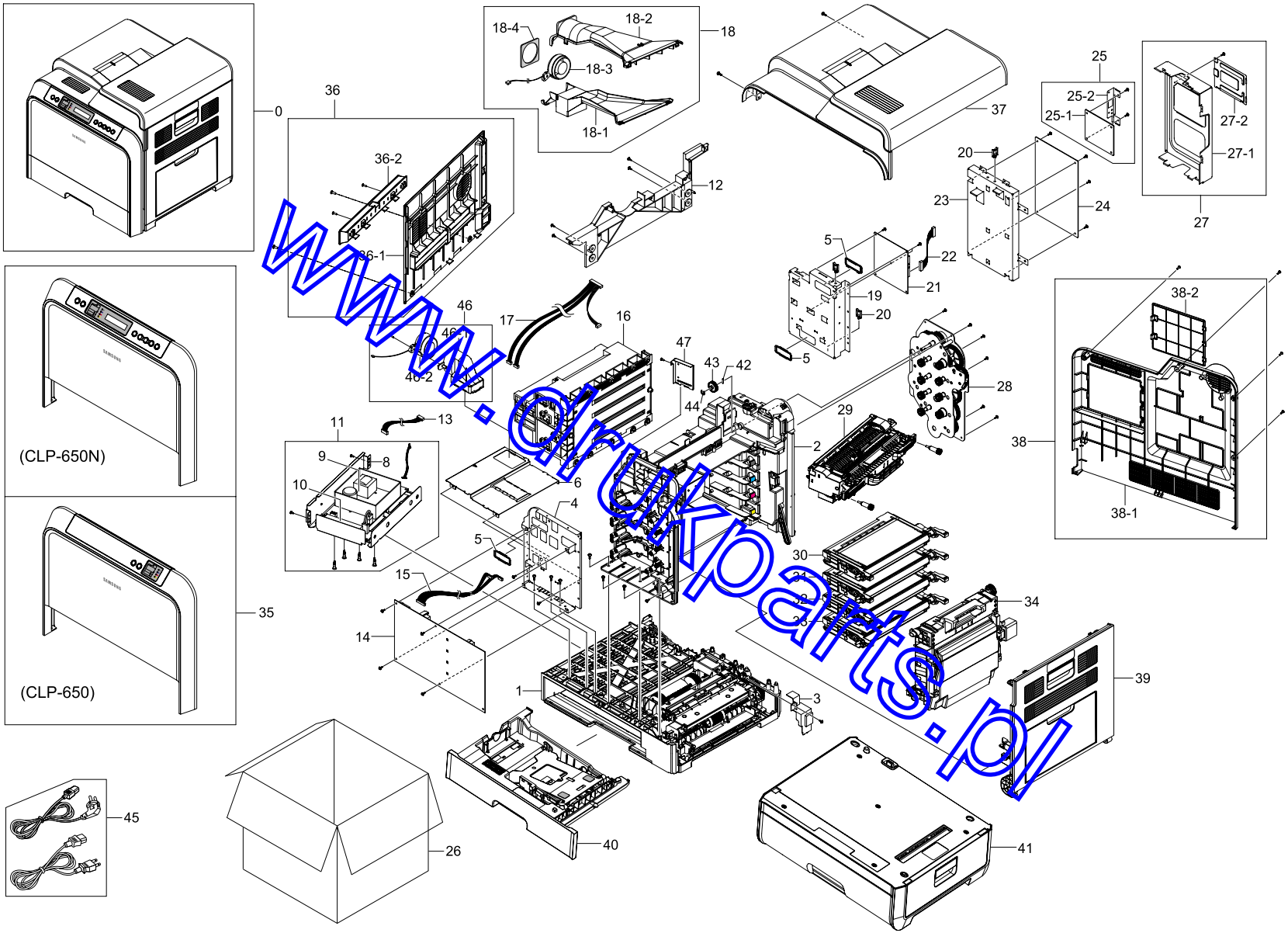

www.qrukparts.pl

8.2. Front Cover

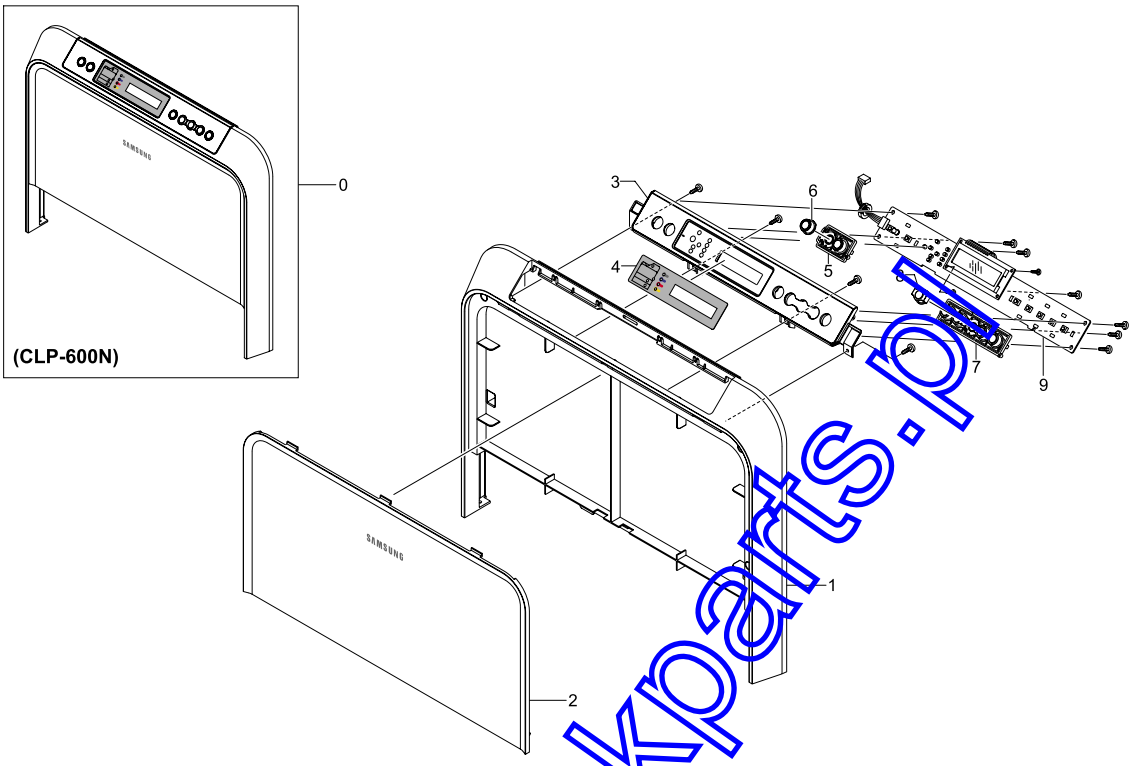

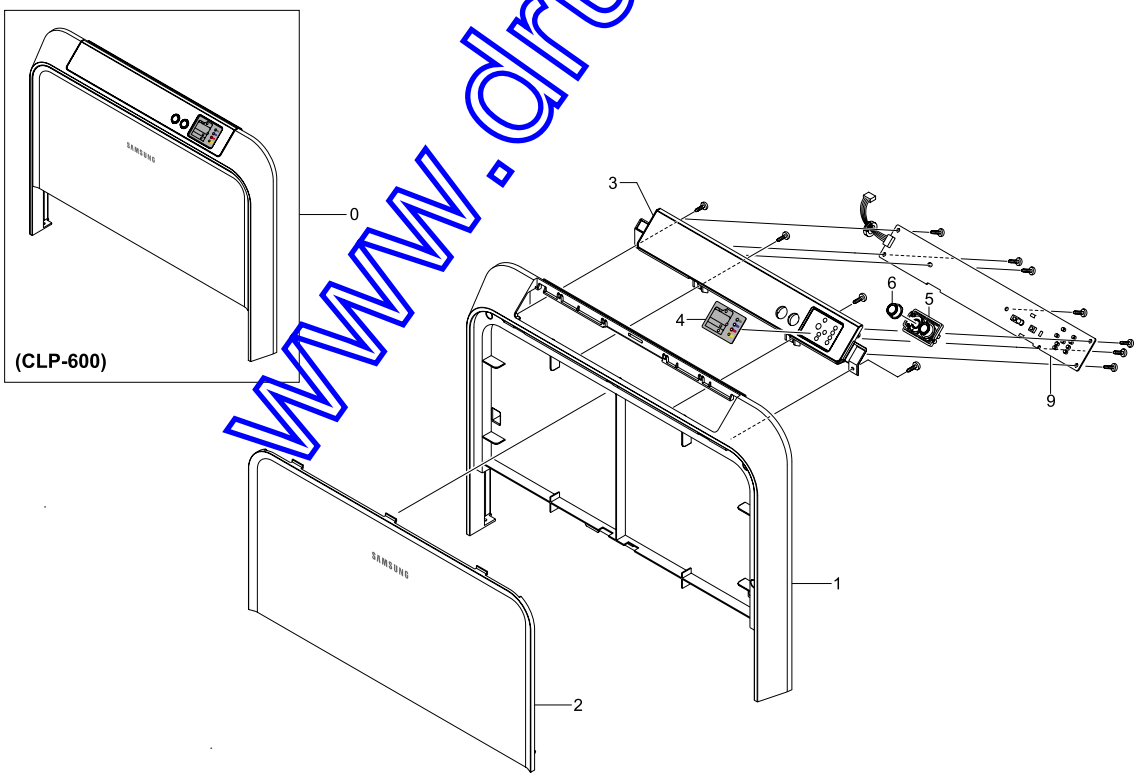

www.drukparts.pl

8.3. Top Cover

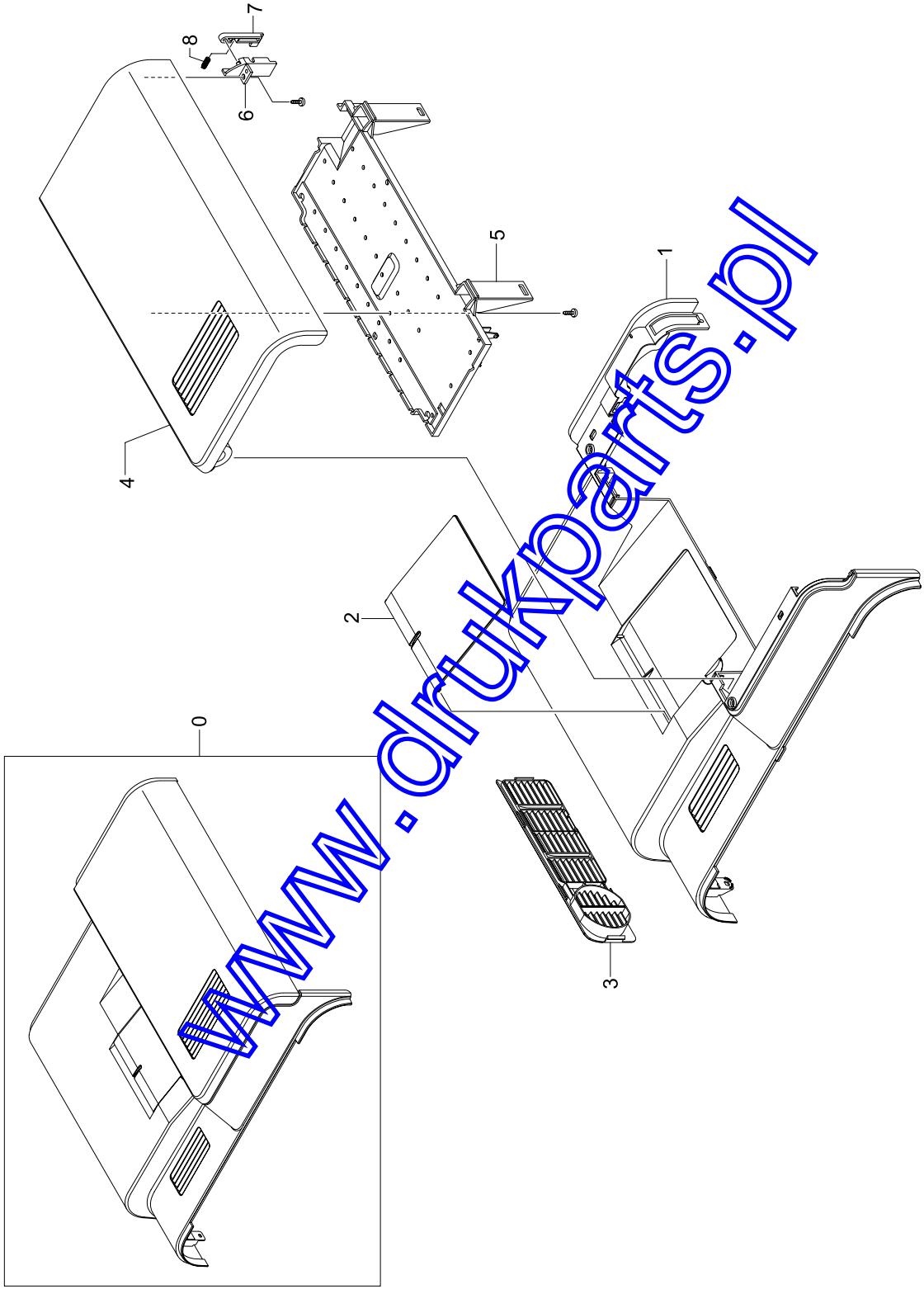

www.drukparts.pl

8.4. Right Cover

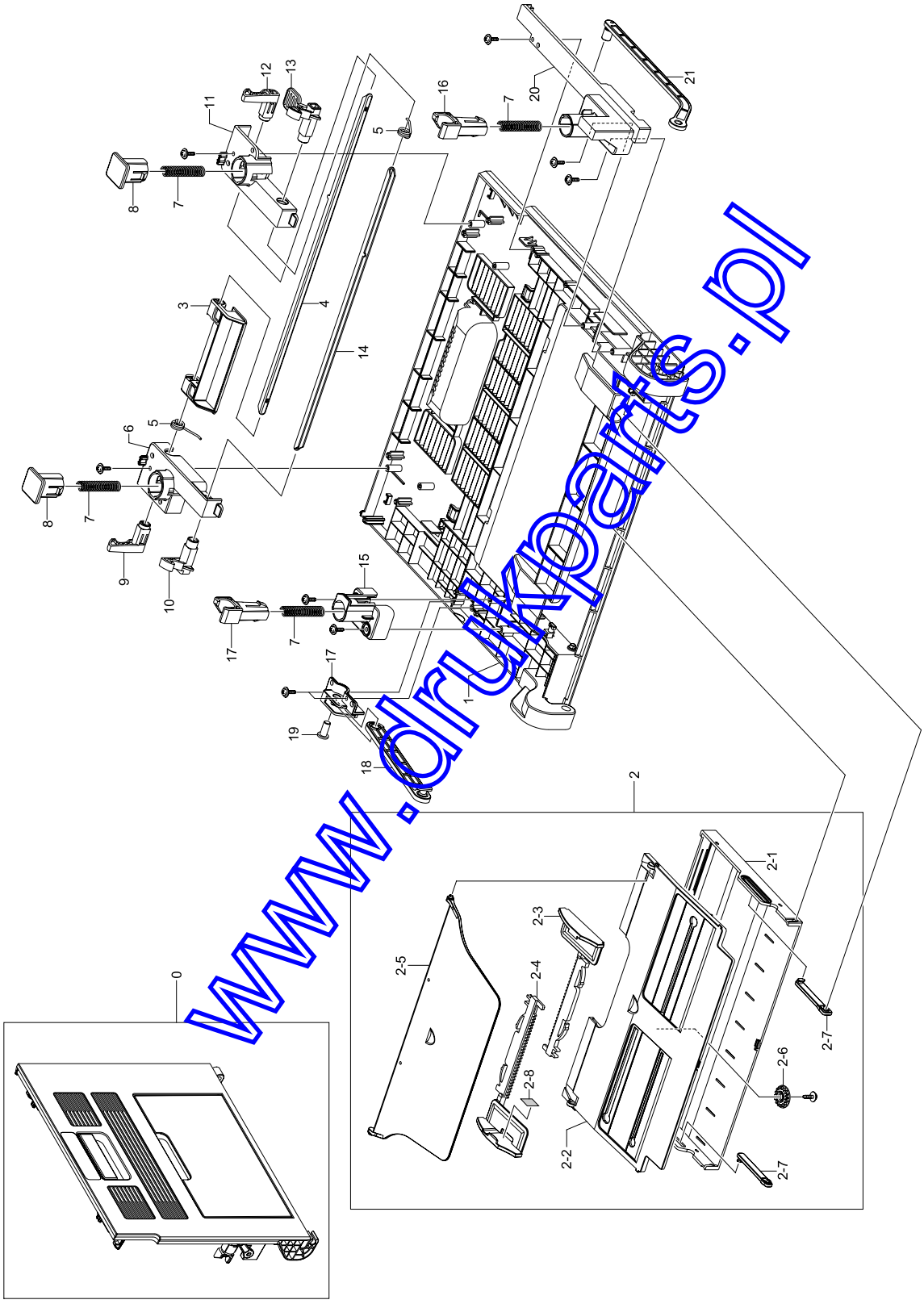

www.drukparts.pl

8.5. Base Frame

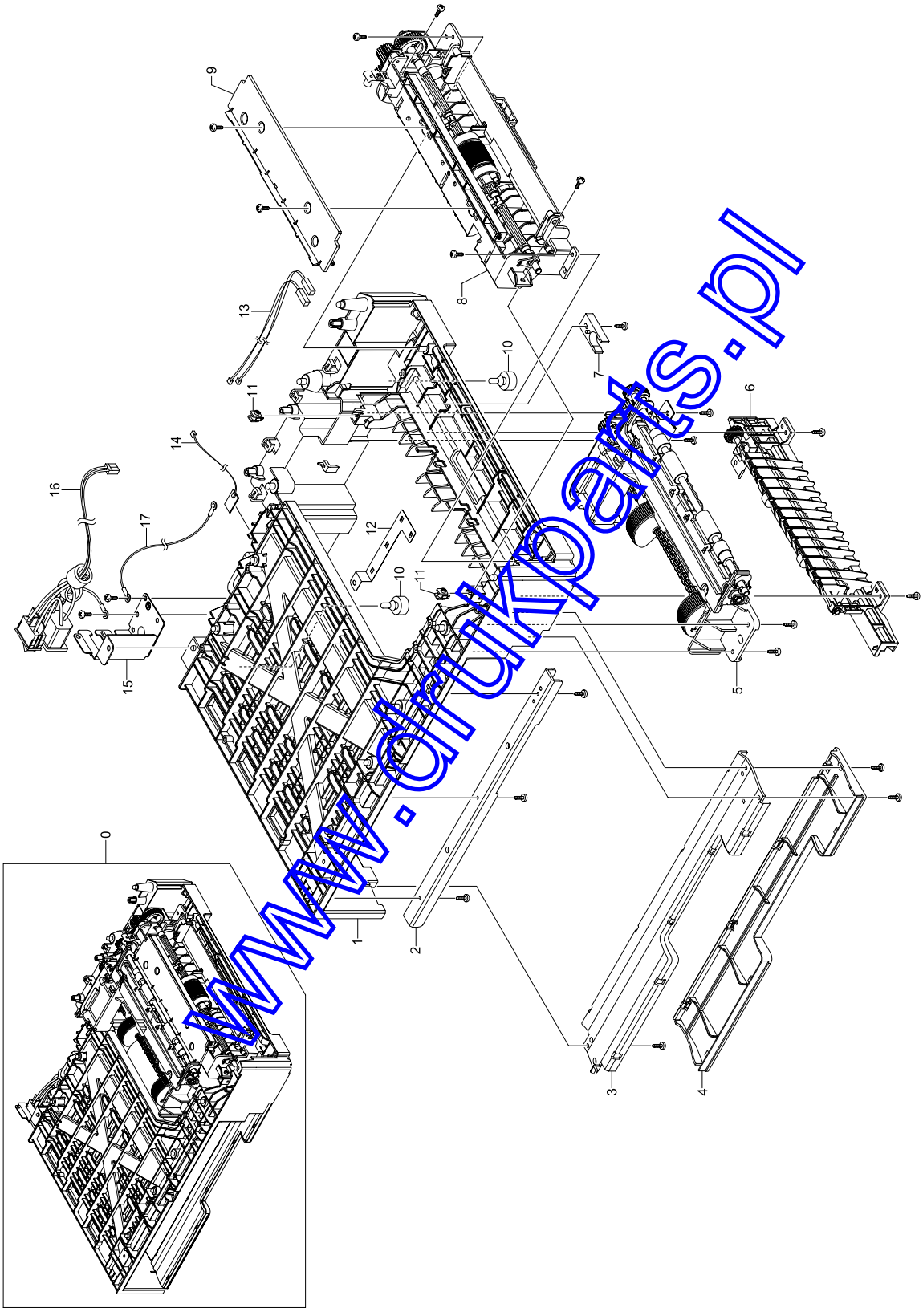

www.drukparts.pl

8.6. Main Frame

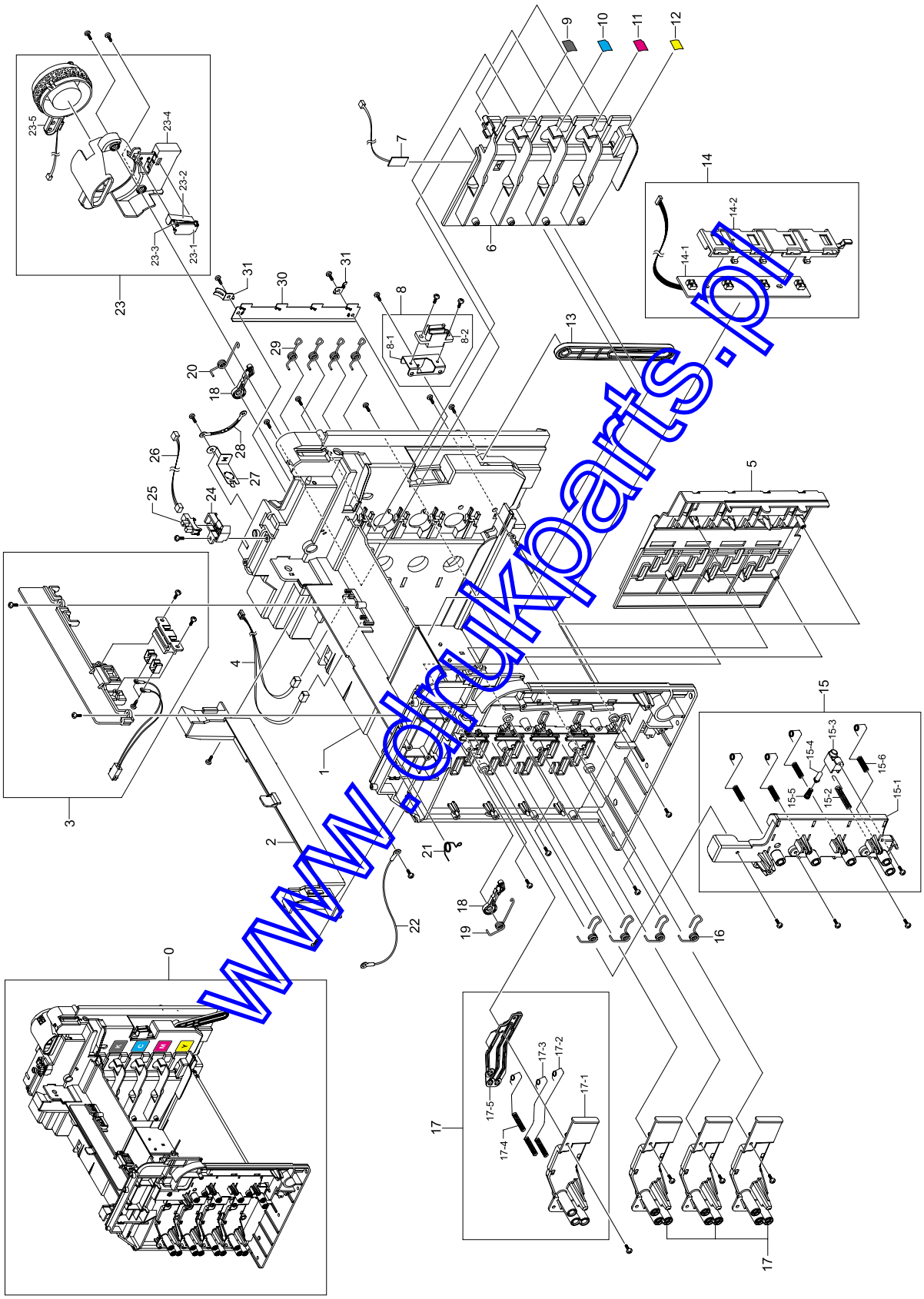

www.dnkparts.pl

8.7. Fuser

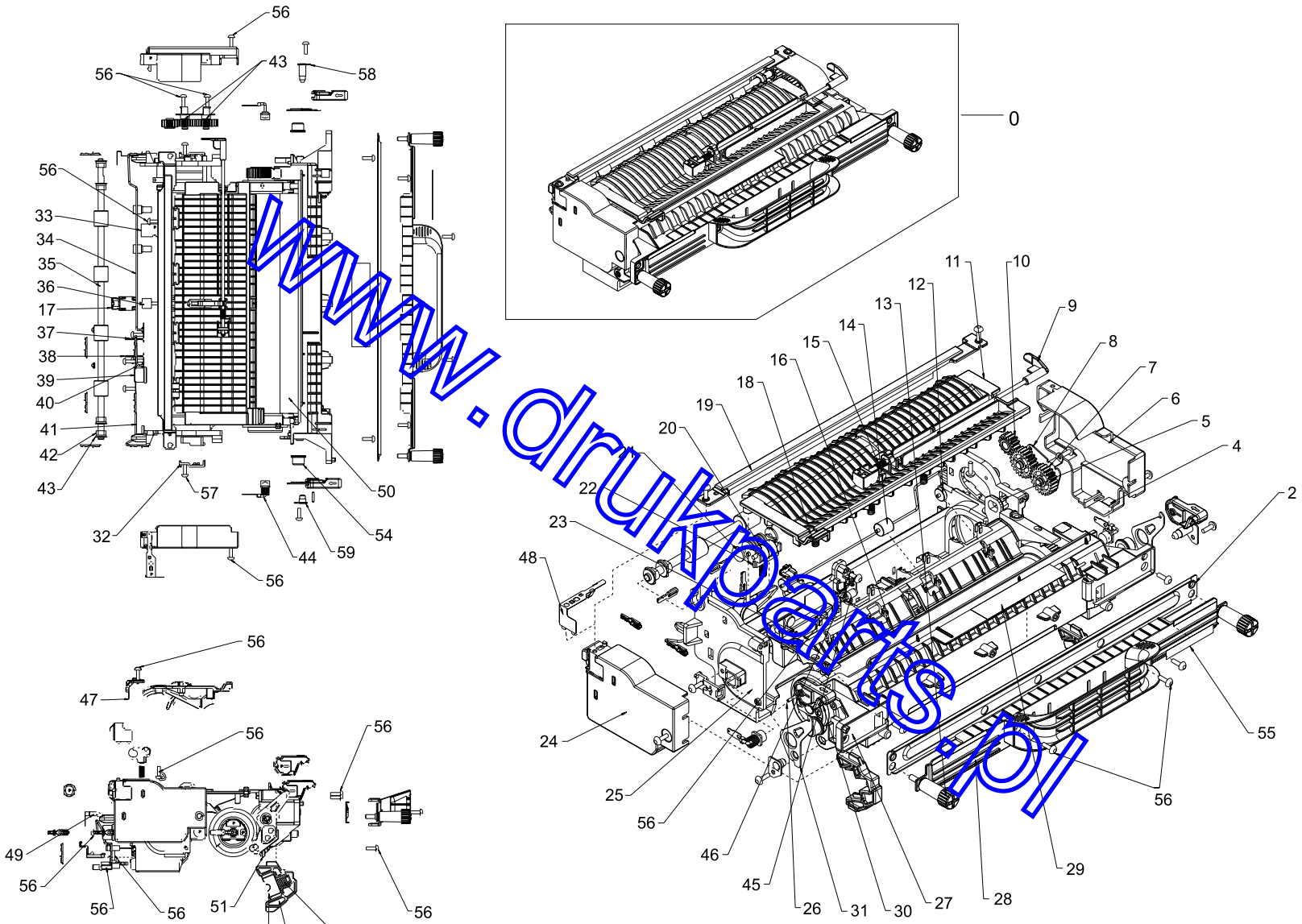

www.drukparts.pl

8.8. Main Drive

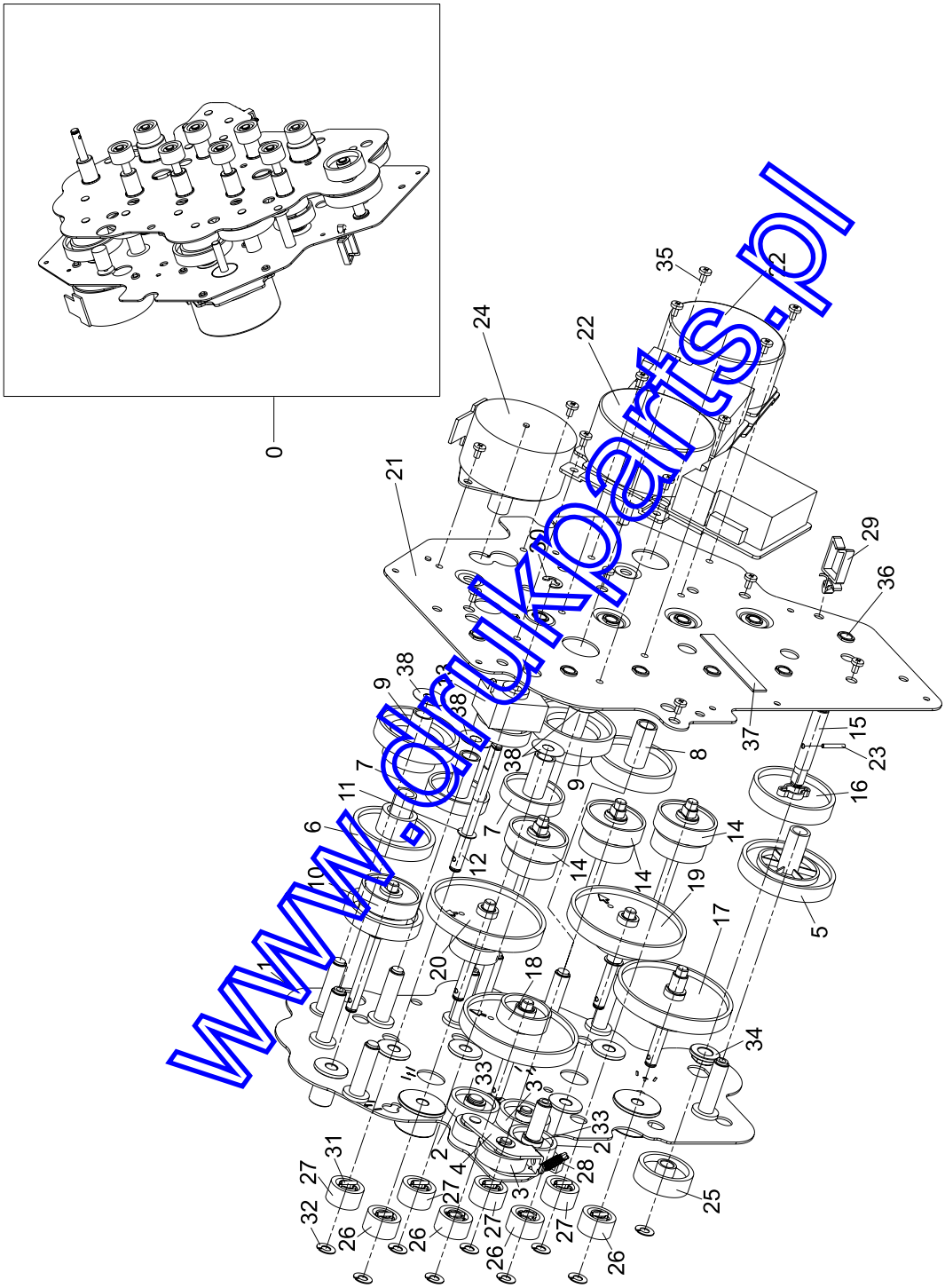

www.qlykoarts.pl

8.9. MPF

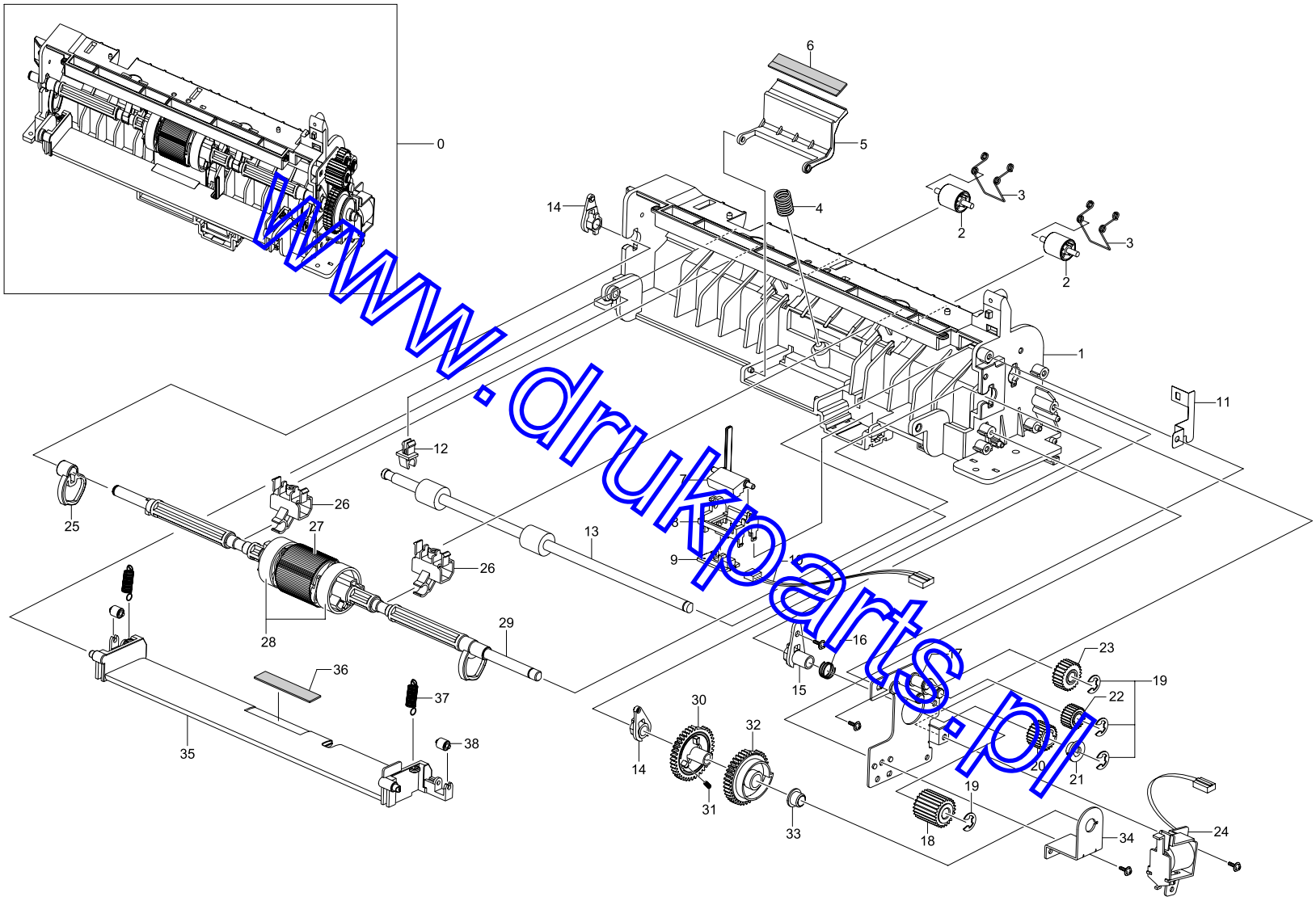

www.drukparts.pl

8.10. Pick Up

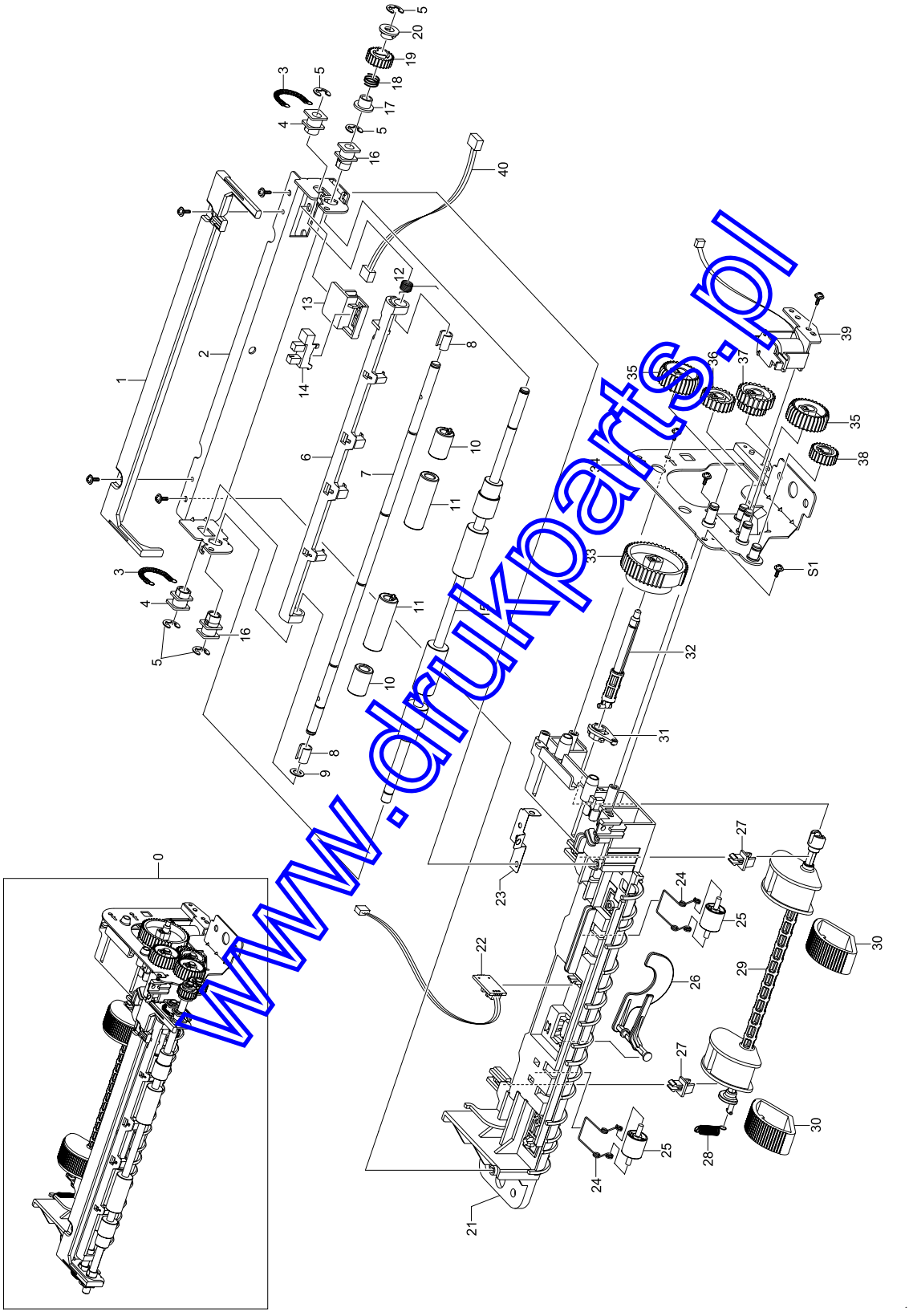

www.drukparts.pl

8.11. Guide Paper

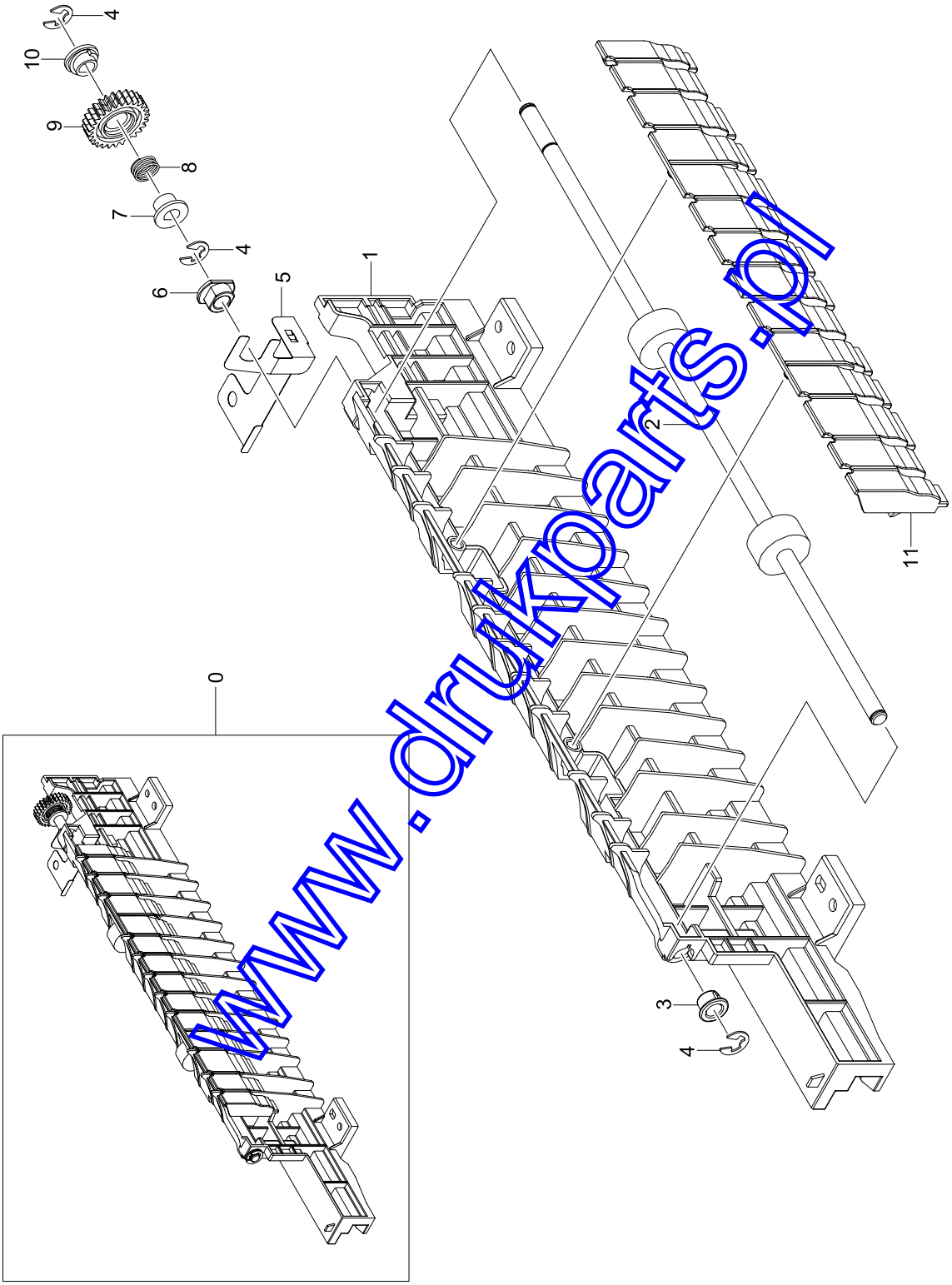

www.drukparts.pl

8.12. Cassette Unit

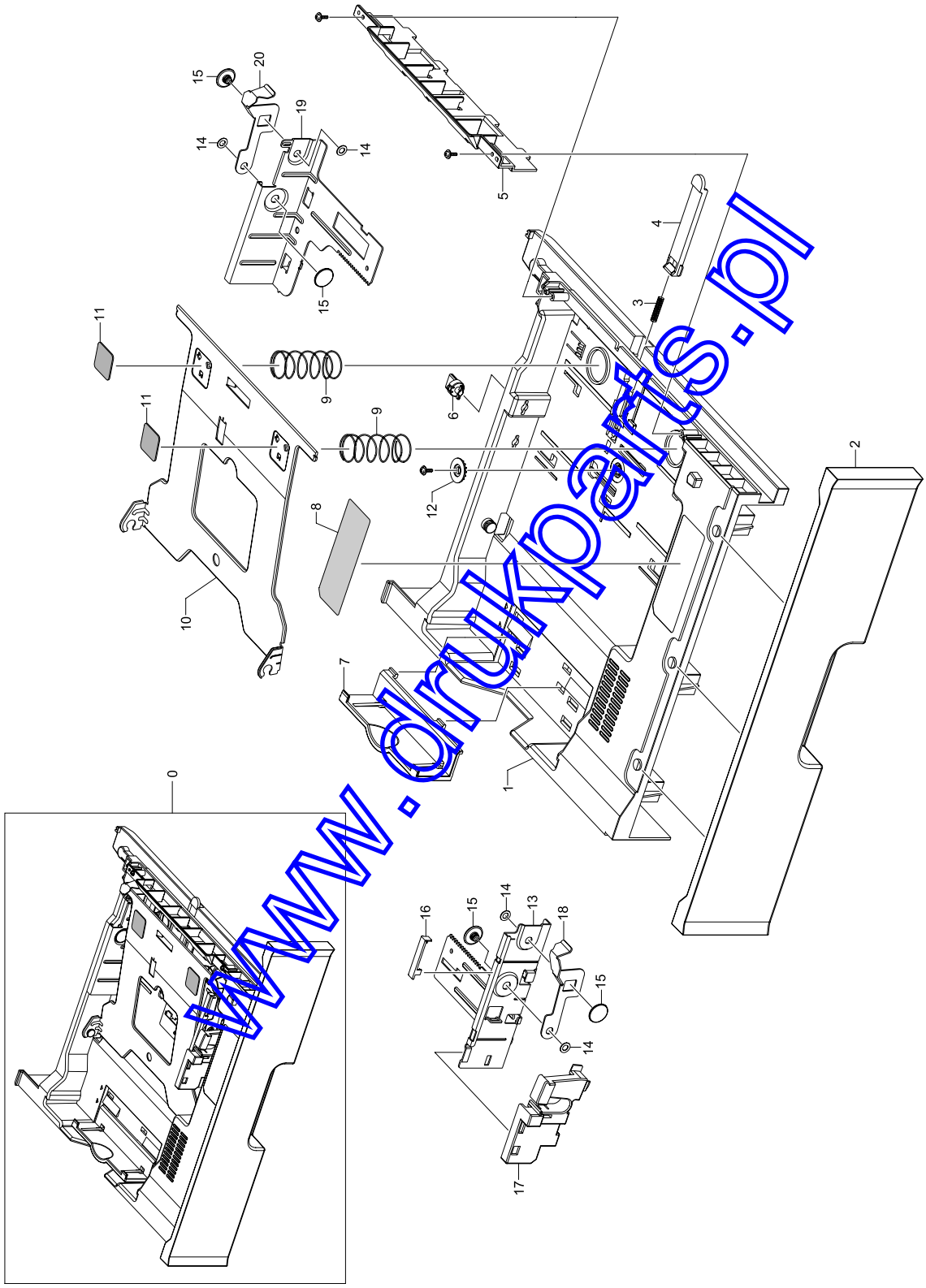

www.drukparts.pl

Model Parts List (CLP-650N/SEE)

Service BOM(SA : Service Available, **SNA** : Service not Available, DNA:DELIVERY not AVAILABLE)

Drawer# (Section-No)	Part Code	Description	Location	Status (SA/SNA)
8.1-1	JC97-02187A	MEA UNIT-FRAME BASE;CLP-600,SEC,EXPORT,-	M0013	SNA
8.1-2	JC97-02151B	MEA UNIT-FRAME MAIN;CLP-650,SEC,EXPORT,-		SNA
8.1-3	JC63-00585A	COVER-_M_GEAR;CLP-600,HIPS,T2.0,W37.1,L9	C0031	SA
8.1-4	JC61-01002A	FRAME-P-FRONT;CLP-600,SECC,-,-,-,T1.0,W2	F0012	SNA
8.1-5	JC61-01012A	GUIDE-_M_BUSH HARNESS S;CLP-600,ABS,2.0,	G0039	SNA
8.1-6	JC61-01004A	FRAME-P-BOTTOM;CLP-600,SECC,-,-,-,T1.0,W	F0011	SNA
8.1-7	JC61-01046A	BRACKET-P-MPF;CLP-600,SECC,T1.2,W46.5,L2	B0015	SNA
8.1-8	JC61-00998A	BRACKET-P-SHIELD SMPS;CLP-600,SECC,T1.0,	B0018	SNA
8.1-9	JC44-00100A	SMPS-PSP_TYPE5_V2C;SCX-4521F,*,AC/DC,-,2	S0014	SNA
8.1-11	JC96-03986A	ELA UNIT-SMPS PDL V2;CLP-650,SEC,EXPORT,		SA
8.1-12	JC61-01018A	HOUSING-_M_MIDDLE PART;CLP-600,HIPS,HB,2	H0023	SA
8.1-13	JC39-00418A	CBF HARNESS-MAIN_SMPS;CLP-600,CBF HARNES	C0017	SA
8.1-14	JC44-00098A	HVPS-DAVINCI;-,24V,21.6V~27.6V,-,MAX 5KV	H0027	SA
8.1-16	JC59-00022A	UNIT-LSU DAVINCI;CLP-600,-,-,COLOR 16PPM	U0001	SA
8.1-18	JC96-03437A	ELA UNIT-DUCT LEFT;CLP-600,SEC,EXPORT,-,	E0012	SA
8.1-18-1	JC67-00072A	DUCT-_M_FUSER LOWER;CLP-600,ABS,V0,T2.0,	D0002	SNA
8.1-18-2	JC67-00073A	DUCT-_M_FUSER UPPER;CLP-600,ABS,V0,T2.0,	D0003	SNA
8.1-18-3	JC31-00012C	FAN-DC INVERTER;AD0624HS-A76GL(,SCX-6345		SA
8.1-18-4	JC72-01368A	SPONGE-DUCT;CLP-600,POLYESTERE FOAM,-,T2	S0017	SNA
8.1-19	JC61-01003A	FRAME-P-REAR;CLP-600,SECC,-,-,-,T1.0,W22	F0013	SNA
8.1-20	6502-000132	CABLE CLAMP;DAWS-1NE,ID11,L21.0,NTR,NYLO	C0069	SA
8.1-29	6502-001093	CABLE CLAMP;DAWS-3NE,ID11*L34.8,-,NYLON6	C0002	SA
8.1-21	JC92-01659A	PBA SUB-DRIVER;CLP-600,SEC,KOREA,DRIVER,	P0003	SA
8.1-22	JC39-00426A	CBF HARNESS-DRIVER;CLP-600,CBF HARNESS,U	C0010	SA
8.1-23	JC61-00991A	BRACKET-P-CONT LOWER;CLP-600,SECC,T0.8,W	B0006	SA
8.1-27	JC97-02400A	MEA UNIT-BRKT CONN;CLP-600,SEC,EXPORT,-,	M0007	SA
8.1-27-1	JC70-10234A	IPR-SHIELD SIMM;ML-80,SECC,-,T0.5,-,-,-,	I0004	SA
8.1-27-2	JC61-00992A	BRACKET-P-CONT UPPER;CLP-600,SECC,T0.8,W	B0007	SNA
8.1-28	JC96-03369A	ELA UNIT-DRIVE MAIN;CLP-600,SEC,EXPORT,-	E0011	SA
8.1-30	JC96-03441E	ELA UNIT-DEVE BK_SET;CLP-650,SEC,EXPORT,		SNA
8.1-31	JC96-03443E	ELA UNIT-DEVE C_SET;CLP-650,SEC,EXPORT,S		SNA
8.1-32	JC96-03445E	ELA UNIT-DEVE M_SET;CLP-650,SEC,EXPORT,S		SNA
8.1-33	JC96-03447E	ELA UNIT-DEVE Y_SET;CLP-650,SEC,EXPORT,S		SNA
8.1-34	JC96-03449A	ELA UNIT-PTB SET;CLP-600,SEC,MA,PTB SET	E0019	SNA
8.1-35	JC96-03490A	ELA HOU-COVER F LCD;CLP-600N,SEC,EXPORT,	E0002	SA
8.1-36	JC97-02190D	MEA HOU-COVER LEFT;CLP-600N,SEC,EXPORT,-		SA
8.1-36-2	JC64-00176A	HANDLE-_M_COVER LEFT;CLP-500,HIPS,2.5,28	H0001	SA
8.1-37	JC97-02194A	MEA HOU-COVER TOP;CLP-600,SEC,EXPORT,-,-	M0006	SA
8.1-38	JC97-02242A	MEA HOU-COVER REAR;CLP-600,SEC,EXPORT,-,	M0002	SA
8.1-38-1	JC63-00575A	COVER-_M_REAR;CLP-600,HIPS,2.5,464.9,437	C0036	SNA
8.1-38-2	JC63-00192B	COVER-M MAIN REAR DUMMY;CLP-600,HIPS,-,W	C0043	SA
8.1-39	JC97-02191A	MEA HOU-COVER RIGHT;CLP-600,SEC,EXPORT,-	M0004	SA
8.1-40	JC97-02192A	MEA UNIT-CASSETTE;CLP-600,SEC,EXPORT,-,-	M0009	SA
8.1-42	6043-001097	PIN-SPRING;W,0.3,T,0.1,SUS304 CSP 1/2H,T0	P0015	SNA
8.1-43	JC66-00472A	GEAR-FUSER DRIVE 2_Z30;CLP-500,POM,DEL 5	G0026	SA
8.1-46	JC96-03933A	ELA UNIT-DUCT SMPS;CLP-600,SEC,EXPORT,-,		SA
8.1-46-1	JC67-00161A	DUCT-FAN SMPS;CLP-600,PC+ABS,T2.0,W51.4,		SNA
8.1-48	JC96-03984A	ELA UNIT-TH BOARD V2;CLP-650,SEC,EXPORT,		SA
8.2-1	JC63-00581A	COVER-_M_DECO;CLP-600,HIPS,2.5,462.0,350	C0025	SA
8.2-2	JC63-00582A	COVER-_M_FRONT;CLP-600,ABS,3.0,429.0,221	C0030	SA
8.2-5	JC72-01199B	PMO-OPE KEY 2;CLP-510,ABS,36024,-,-,HB,-	P0047	SA
8.2-6	JC72-01200A	PMO-OPE KEY 2 CAP;CLP-500,PMMA,MILKY WHI	P0046	SA
8.2-7	JC72-01197C	PMO-M OPE KEY 1;CLP-600,ABS,SOLITARY BLU	P0045	SA
8.2-3	JC63-00613A	COVER-_M_OP FRAME LCD;CLP-600,HIPS,T2.5,	C0035	SA
8.2-4	JC63-00642G	SHEET-COVER OP LCD;CLP-650N,PC SHEET,T0.		SA
8.2-8	JC72-01198C	PMO-M OPE KEY 1 CAP;CLP-600,ABS,SOLITARY	P0044	SA
8.2-9	JC92-01675A	PBA SUB-LCD_PANEL;CLP-600,SEC,KOREA,LCD_	P0005	SA
8.3-1	JC63-00574A	COVER-_M_TOP;CLP-600,HIPS,2.5,386.7,465.	C0041	SNA
8.3-2	JC63-00588A	COVER-_M_STACKER;CLP-600,ABS,T2.5,W119.5	C0040	SA
8.3-3	JC63-00590A	COVER-_M_VENT;CLP-600,HIPS,T2.5,W215.0,L	C0042	SNA
8.3-4	JC63-00578A	COVER-_M_EXIT;CLP-600,HIPS,2.5,370.0,198	C0029	SNA
8.3-5	JC63-00579A	COVER-_M_AIR DUCT;CLP-600,PC+GF20%,2.5,3	C0024	SA
8.3-6	JC63-00580A	COVER-_M_ACTUATOR SENSOR;CLP-600,HIPS,2.	C0023	SNA
8.3-7	JC66-00798A	LEVER-_M_ACTUATOR SENSOR;CLP-600,POM,T2.	L0011	SA
8.3-8	JC61-00047A	SPRING ETC-TR L HAWK;ML-6060A,SWP-B,-,-,	S0033	SA
8.4-1	JC63-00589A	COVER-_M_RIGHT;CLP-600,HIPS,T2.5,W370.0,	C0037	SA
8.4-2	JC97-02405A	MEA UNIT-COVER MPF;CLP-600,SEC,EXPORT,-,	M0010	SA
8.4-2-1	JC63-00584A	COVER-_M_MP;CLP-600,HIPS,T2.5,257.4,L160	C0034	SNA
8.4-2-2	JC63-00586A	COVER-_M_INNER MP;CLP-600,HIPS,T2.0,W252	C0033	SNA

www.oemparts.pl

Service BOM(SA : Service Available, **SNA** : Service not Available, DNA:DELIVERY not AVAILABLE)

Drawer# (Section-No)	Part Code	Description	Location	Status (SA/SNA)
8.4-2-3	JC61-01043A	GUIDE-_M_SIDE MP L;CLP-600,HIPS,-,W131.9	G0049	SNA
8.4-2-4	JC61-01042A	GUIDE-_M_SIDE MP R;CLP-600,HIPS,T1.5,W13	G0050	SNA
8.4-2-5	JC72-00778B	PMO-TRAY EXIT MP;CLP-500,HIPS,LIGHT GRAY	P0050	SA
8.4-2-6	JG66-40003A	GEAR-PINION;SF4000,POM,WHT,M1,Z16	G0035	SA
8.4-2-7	JC63-00587A	TRAY-_M_LINK MP L;CLP-600,HIPS,T3.0,W55.	T0003	SA
8.4-2-8	JC68-01528A	LABEL(R)-HEIGHT MP;COMMON,KOREA,PC,T0.7,	L0005	SNA
8.4-3	JC64-00179A	HANDLE-_M_COVER R;CLP-600,HIPS,T2.5,W98.	H0002	SNA
8.4-4	JC61-01050A	BRACKET-P-COVER LOCK;CLP-600,SECC,T1.2,W	B0008	SNA
8.4-5	6107-001206	SPRING-TS;SUS304-WPB,BLACK,PI1.5,D10,L5,	S0043	SNA
8.4-6	JC61-01057A	HOLDER-_M_UPPER R;CLP-600,HIPS,HB,T2.5,W	H0018	SNA
8.4-7	6107-001194	SPRING-CS;SWP-B,BLK,PI0.9,D6.95,L20,-,-,	S0032	SNA
8.4-7	6107-001247	SPRING-CS;STS304-WPB,-,PI1,D8,L44,-,-,ID	S0034	SNA
8.4-7	6107-001172	SPRING-CS;SUS304,-,PI0.5,D6.7,L17.5,-,-,	S0035	SA
8.4-8	JC61-01053A	GUIDE-_M_SUPPORTER UPPER;CLP-600,HIPS,HB	G0052	SNA
8.4-9	JC72-01082A	PMO-COVER DUP LOCKER R;CLP-500,POM,WHITE	P0037	SA
8.4-10	JC64-00178A	LOCKER-_M_PTB REAR;CLP-600,POM,WHT,HB,-,	L0017	SA
8.4-11	JC61-01058A	HOLDER-_M_UPPER F;CLP-600,HIPS,HB,T2.5,W	H0017	SNA
8.4-12	JC72-01081A	PMO-COVER DUP LOCKER F;CLP-500,POM,WHITE	P0036	SA
8.4-13	JC64-00177A	LOCKER-_M_PTB FRONT;CLP-600,PC+ABS,87182	L0016	SA
8.4-14	JC61-01051A	BRACKET-P-PTB LOCK;CLP-600,SECC,T1.2,W29	B0017	SNA
8.4-15	JC61-01055A	HOLDER-_M_LOWER R;CLP-600,HIPS,HB,T2.5,W	H0013	SNA
8.4-16	JC61-01052A	GUIDE-_M_SUPPORTER LOWER;CLP-600,HIPS,HB	G0051	SNA
8.4-17	JC61-01125A	HOLDER-_M_LINK;CLP-600,HIPS,HB,T2.5,W19.	H0011	SNA
8.4-18	JC66-00777A	LINK-_M_REAR 2;CLP-600,POM,L135.0,T4.5,-	L0014	SA
8.4-19	JC66-00835A	SHAFT-HINGE LINK;CLP-600,SUM24L,L14.5,¥Ø5	S0005	SNA
8.4-20	JC61-01056A	HOLDER-_M_LOWER F;CLP-600,HIPS,HB,T2.5,2	H0012	SNA
8.4-21	JC66-00778A	LINK-_M_FRONT;CLP-600,POM,L185.3,T3.7,-,	L0012	SA
8.5-1	JC61-01005A	FRAME-_M_BASE BOTTOM;CLP-600,HIPS,HR-136	F0004	SA
8.5-2	JC70-00390A	IPR-CHANNEL FRAME BASE;CLP-500,SECC,-,T1	I0003	SA
8.5-3	JC63-00207A	COVER-M-BASE BAR;CLP-500,HIPS,-,-,-,HB,-	C0044	SA
8.5-4	JC70-00379A	IPR-BRKT BASE BAR;CLP-500,SECC,-,T1.6,-,	I0002	SA
8.5-5	JC97-02149A	MEA UNIT-PICK UP;CLP-600,SEC,EXPORT,-,-,	M0019	SA
8.5-6	JC61-00685A	HOUSING-M-PICK UP MP;ML-2150,PC+ABS,-,-	H0025	SA
8.5-7	JC66-00050A	CAM-CATCH;ML-9400W,POM,-,34¡¿18¡¿7,WHITE S	C0004	SA
8.5-8	JC96-03332A	ELA UNIT-MPF;CLP-600,SEC,EXPORT,-,-,	E0018	SA
8.5-9	JC61-01147A	GUIDE-_M_PAPER MP;CLP-600,HIPS,T3.0,W234	G0043	SNA
8.5-10	JC61-40001A	FOOT-ML80;ML-80,NBR,-,GRAY,-,-,-	F0003	SA
8.5-11	JC63-00175A	COVER-SCREW LOCKING MP;CLP-500,POM,-,-	C0050	SA
8.5-12	JC61-01016A	PLATE-P-GROUND SCF MAIN;CLP-600,SUS304,T	P0026	SNA
8.5-13	JC39-00433A	CBF HARNESS-THER;CLP-600,CBF HARNESS,UL1	C0021	SA
8.5-14	JC92-01660A	PBA SUB-TEMP_SENSOR;CLP-600,SEC,KOREA,TE	P0010	SA
8.5-15	JC61-00999A	BRACKET-P-POWER;CLP-600,SECC,T1.2,W41.5,	B0016	SNA
8.5-16	JC39-00452A	CBF HARNESS-AC_INLET;CLP-600,CBF HARNESS	C0008	SA
8.6-1	JC61-01001A	FRAME-_M_MAIN;CLP-600,ABS+GF20%,VB-4921,	F0007	SNA
8.6-2	JC63-00577A	COVER-_M_EXIT GUIDE;CLP-600,ABS,HB,2.5,2	C0027	SA
8.6-3	JC96-03772B	ELA UNIT-HOLDER_C;CLP-650,SEC,EXPORT,-,		SA
8.6-4	JC39-00424A	CBF HARNESS-EXIT;CLP-600,CBF HARNESS,UL1	C0011	SA
8.6-5	JC61-01007A	GUIDE-_M_RAIL FRONT;CLP-600,PC+ABS,V0,-,	G0045	SA
8.6-6	JC61-01006A	GUIDE-_M_RAIL REAR;CLP-600,PC+ABS, V0,-,	G0046	SA
8.6-7	JC92-01789A	PBA SUB-TEMP;CLP-600,SED,KOREA,-,-,-,-,-		SNA
8.6-8	JC96-03771A	ELA UNIT-BRKT DRAW;CLP-600,SEC,EXPORT,-,	E0004	SA
8.6-9	JC68-01503A	LABEL(R)-BK;COMMON,-,PVC,T0.12,W15.0,L7.	L0002	SNA
8.6-10	JC68-01504A	LABEL(R)-C;COMMON,-,PVC,T0.12,W15.0,L7.0	L0003	SNA
8.6-11	JC68-01505A	LABEL(R)-M;COMMON,-,PVC,T0.12,W15.0,L7.0	L0007	SNA
8.6-12	JC68-01506A	LABEL(R)-Y;COMMON,-,PVC,T0.12,W15.0,L7.0	L0008	SNA
8.6-13	JC66-00776A	LINK-_M_REAR 1;CLP-600,POM,L112.4,T4.5,-	L0013	SA
8.6-14	JC96-03366A	ELA UNIT-DEVE CRUM;CLP-600,SEC,EXPORT,-,	E0007	SNA
8.6-14-1	JC92-01671A	PBA SUB-DEVE_CRUM_IF;CLP-600,SEC,KOREA,D	P0002	SA
8.6-14-2	JC63-00571A	COVER-_M_DEVE CRUM BD;CLP-600,HIPS,2.0,1	C0026	SA
8.6-15	JC97-02402A	MEA UNIT-PTB TERMINAL;CLP-600,SEC,EXPORT	M0020	SA
8.6-15-1	JC61-01011A	GUIDE-_M_PTB TERMINAL;CLP-600,ABS,2.0,23	G0044	SA
8.6-15-2	JC70-00508A	ELECTRODE-HV F;CLP-600,SUS304WPB,¥Ø5,L32	E0026	SA
8.6-15-3	JC61-01010A	GUIDE-_M_TERMINAL CH;CLP-600,ABS,2.0,15.	G0053	SA
8.6-15-4	JC97-01401A	MEA UNIT-TERMINAL:TR;ML-5000A,SAMSUNG,KO		SA
8.6-15-6	JC70-00513A	ELECTRODE-HV E;CLP-600,SUS304WPB,¥Ø5,L32	E0025	SA
8.6-16	JC61-01264A	SPRING ETC-OPC F;CLP-600,SUS304 ,1.5,6.5	S0026	SA
8.6-17	JC97-02403A	MEA UNIT-DEV TERMINAL;CLP-600,SEC,EXPORT	M0011	SA
8.6-17-1	JC61-01008A	GUIDE-_M_TERMINAL UPPER;CLP-600,ABS,2.0,	G0055	SA
8.6-17-2	JC70-00505A	ELECTRODE-HV C;CLP-600,SUS304 WPB DU NI-	E0023	SA
8.6-17-3	JC70-00504A	ELECTRODE-HV B;CLP-600,SUS304 WPB DU NI-	E0022	SA
8.6-17-4	JC70-00503A	ELECTRODE-HV A;CLP-600,SUS304 WPB DU NI-	E0021	SA
8.6-17-5	JC61-01009A	GUIDE-_M_TERMINAL LOWER;CLP-600,ABS,2.0,	G0054	SA
8.6-18	JC61-01019A	HOLDER-_M_PTB LOCKER;CLP-600,POM,3.0,-,3	H0015	SNA
8.6-19	JC61-01265A	SPRING ETC-PTB F;CLP-600,SUS304 ,1.5,6.5	S0029	SA

WWW.Partsbook.pl

Service BOM(SA : Service Available, **SNA** : Service not Available, DNA:DELIVERY not AVAILABLE)

Drawer# (Section-No)	Part Code	Description	Location	Status (SA/SNA)
8.6-20	JC61-01266A	SPRING ETC-PTB R;CLP-600,SUS304 ,1.5,6.5	S0030	SA
8.6-21	JC70-00506A	ELECTRODE-HV D;CLP-600,SUS304WPB,¥Õ10.0,	E0024	SA
8.6-22	JC39-00509A	CBF HARNESS-GND ZENER;SCX-4521F,-,UL1007		SA
8.6-23	JC96-03770A	ELA UNIT-DUCT REAR;CLP-600,SEC,EXPORT,-,	E0013	SNA
8.6-23-1	JC61-01061A	HOLDER-_M_SWITCH;CLP-600,HIPS,HB,T2.0,W3	H0016	SA
8.6-23-2	JC61-00707A	PLATE-S/W DUPLEX;CLP-500,SUS304 1/2H,T0.	P0028	SA
8.6-23-3	JC39-00454A	CBF HARNESS-SWITCH;CLP-600,CBF HARNESS,U	C0020	SA
8.6-23-4	JC67-00074A	DUCT-_M_FUSER FAN;CLP-600,HIPS,HB,T2.0,W	D0001	SA
8.6-24	JC61-01077A	HOUSING-_M_SENSOR EXIT;CLP-600,HIPS,HB,T	H0024	SNA
8.6-25	0604-001264	PHOTO-INTERRUPTER;TR,-,-,REFLECTIVE,-		SA
8.6-25	0604-001154	PHOTO-INTERRUPTER;TR,0.2-1.0MA,80MW,DIP,	P0012	SA
8.6-26	JC39-00428A	CBF HARNESS-MP_1;CLP-600,CBF HARNESS,UL1	C0018	SA
8.6-27	JC61-01020A	PLATE-P-GROUND FUSER;CLP-600,SUS304,T0.2	P0023	SNA
8.6-28	JC39-00302A	CBF HARNESS-100M_GND;CLP-500,-,-,1 PIN,5	C0007	SA
8.6-29	JC61-01267A	SPRING ETC-OPC R;CLP-600,SUS304 ,1.5,6.5	S0027	SA
8.6-30	JC61-01014A	PLATE-P-GROUND OPC;CLP-600,SECC,T0.5,W15	P0024	SNA
8.6-31	JC61-01015A	PLATE-P-GROUND DRIVE;CLP-600,SUS304,T0.2	P0022	SNA
8.7-30	JC66-01200A	LEVER-M-RELEASE;CLP-600,PC,-,W36.0,L20.0		SA
8.7-31	JC61-01638A	BRACKET-P-RELEASE LEVER;CLP-600,SECC,T1.		SNA
8.7-41	JC39-00561A	CBF HARNESS-FUSER3;CLP-600,CBF HARNESS,U		SA
8.7-44	JC96-03655A	ELA UNIT-CARBON&SP;ML-3560,SEC,USA,BRUSH	K3054	SA
8.7-45	JC66-01231A	ROLLER-DUMMY;CLP-600,PFA,OD6.0,L10.0,-,-		SNA
8.7-46	JC61-01685A	SPRING ETC-DUMMY;CLP-600,SUS,0.5,-,-,20.		SA
8.7-50	JC97-02617A	MEA UNIT-PR;CLP-600,SEC,EXPORT,-,-,-,-		SA
8.7-54	JC61-01639A	BUSH-M-RELEASE LEVER;CLP-600,PET GF 30%,		SA
8.7-55	JC68-01134A	LABEL(P)-BLANK(FUSER);ML-1710D3,-,WHITE		SNA
8.7-56	6003-000196	SCREW-TAPTITE;PWH,+,B,M3,L10,NI PLT,SWRC	Z4198	SA
8.7-56	6002-000308	SCREW-TAPTITE;PH,+,B,M2.6,L6,ZPC(YEL),SW	-	SA
8.7-56	6003-000261	SCREW-TAPTITE;BH,+,B,M3,L6,ZPC(YEL),SWRC		SNA
8.7-56	6003-001086	SCREW-TAPTITE;BH,+,-,B,M3,L12,ZPC(BLK),S	-	SA
8.7-56	6003-000264	SCREW-TAPTITE;PWH,+,-,B,M3,L6,ZPC(YEL),S		SNA
8.7-56	6003-001256	SCREW-TAPTITE;BH,+,B,M4,L10,NI PLT,SWRCH		SNA
8.7-57	6003-000282	SCREW-TAPTITE;BH,+,-,B,M3,L8,ZPC(BLK),SW	Z4169	SA
8.7-58	JC61-01637A	BRACKET-P-GUIDE LEVER R;CLP-600,SECC,T1.		SNA
8.7-59	JC61-01636A	BRACKET-P-GUIDE LEVER L;CLP-600,SECC,T1.		SNA
8.7-2	JC61-01069A	BRACKET-P-GUIDE FRAME;CLP-600,SECC,T1.8,	B0010	SNA
8.7-3	JC61-01126A	HOLDER-_M_FUSER GEAR;CLP-600,PBT+PTFE,GF	H0007	SNA
8.7-5	JC63-00648A	GROUND-P-FUSER BALL;CLP-600,SUS304,T0.3,	G0038	SNA
8.7-6	JC63-00593A	COVER-_M_SIDE R;CLP-600,PET GF30%,T2.5,W	C0039	SNA
8.7-7	JC66-00781A	GEAR-_M_EXIT IDLE;CLP-600,PBT,M1.0,Z22,-	G0004	SA
8.7-8	JC61-01070A	BRACKET-P-IDLE GEAR;CLP-600,SECC,T1.0,W3	B0012	SNA
8.7-9	JC66-00784A	LEVER-_M_ACTUATOR EXIT;CLP-600,PET GF30%	L0010	SA
8.7-10	JC66-00782A	GEAR-_M_EXIT;CLP-600,POM,M1.0,Z14,-,WHT,	G0005	SA
8.7-11	JC61-01064A	GUIDE-_M_DUPLEX;CLP-600,PET+GF30%,5V,T2.	G0040	SNA
8.7-12	JC66-00608A	ROLLER-EXIT IDLE;CLP-500,TEFLON,PI10.5,L	R0008	SNA
8.7-13	JC64-00186A	HANDLE-M-FIX FUSER;CLP-600,PC+SUM,-,-,L4	H0003	SA
8.7-14	JC72-20901A	PEX-ROLLER EXIT FDP;ML-5000A,TEFLON,WHI	P0011	SA
8.7-15	JC61-01271A	SPRING ETC-ACTUATOR;CLP-600,SUS304 ,0.35	S0018	SA
8.7-16	JC96-03966A	ELA UNIT-HEAT ROLLER;CLP-650,SEC,EXPORT,		SA
8.7-17	JC67-00163A	CAP-THERMISTOR;CLP-600,PET+GF30%,T1.5,W1		SNA
8.7-18	JC61-70911A	SPRING ETC-EXIT ROLL FD;ML-165,SUS304 WP	S0021	SA
8.7-19	JC63-00594A	COVER-_M_EXIT ROLLER;CLP-600,PET GF30%,T	C0028	SNA
8.7-20	JC72-41007A	PMO-ROLLER FDP;ML-165,POM,BLACK,-,-,-	P0048	SA
8.7-21	JC66-01233A	ROLLER-EXIT;CLP-600,PFA,OD12.0,L26.0,-,-		SNA
8.7-22	JC61-00547A	HOLDER-EXIT(MC);SCX-5312F,PC,-,-,-,WHITE	H0019	SNA
8.7-23	JC61-01065A	GUIDE-_M_OUTPUT;CLP-600,PET+GF30%,5V,T2.	G0042	SNA
8.7-24	JC63-00592A	COVER-_M_SIDE L;CLP-600,PET GF30%,T2.5,W	C0038	SNA
8.7-25	JC61-01062A	FRAME-_M_UPPER FUSER;CLP-600,PET+GF30%,B	F0008	SNA
8.7-27	JC61-01063A	FRAME-_M_LOWER FUSER;CLP-600,PET+GF30%,B	F0006	SNA
8.7-28	JC63-00644A	COVER-M-FRAME FUSER;CLP-600,PC,T3,W309.0	C0047	SNA
8.7-29	JC68-01581A	LABEL(P)-CAUTION HOT;COMMON,SAMSUNG,PET,	L0001	SNA
8.7-32	JC63-00643A	COVER-M-CARBON BRUSH;CLP-600,PET GF 30%,	C0045	SNA
8.7-33	JC92-01752A	PBA SUB-NEW_FUSER;CLP-600,SEC,KOREA,13*1	P0007	SA
8.7-34	JC39-00444A	CBF HARNESS-FUSER2;CLP-600,CBF HARNESS,U	C0013	SA
8.7-35	JC66-00783A	ROLLER-EXIT;CLP-600,SUM24L+EPDM,¥Õ8.0+¥ÕSN	R0009	SNA
8.7-36	1404-001359	THERMISTOR-NTC ASSY;1KOHM,-,4537K,0.25MW	T0001	SA
8.7-37	JC70-00489A	ELECTRODE-P-TERMINAL R;CLP-600,C5210P,T0	E0028	SA
8.7-38	JC70-00488A	ELECTRODE-P-TERMINAL L;CLP-600,C5210P,T0	E0027	SA
8.7-39	4712-001027	THERMOSTAT;125/250VAC,15/7.5A,170+-5C,0C	T0002	SA
8.7-40	JC39-00506A	CBF HARNESS-FUSER1;CLP-600,CBF HARNESS,U	C0012	SA
8.7-42	JC61-00423A	BUSH-6_D;ML-9400W,BEARING OIL,-,-,-,NTR,	B0025	SA
8.7-47	JC75-00095A	MEC-BRUSH ANTISTATIC;ML-6060A,SEC,NTR	M0022	SA
8.7-48	JC63-00837A	GROUND-P-COVER EXIT;CLP-600,SUS304,T0.2,	G0036	SA
8.7-49	JC63-00647A	GROUND-P-FUSER B;CLP-600,SUS304,T0.3,W17	G0037	SNA

www.allinparts.com

Service BOM(SA : Service Available, **SNA** : Service not Available, DNA:DELIVERY not AVAILABLE)

Drawer# (Section-No)	Part Code	Description	Location	Status (SA/SNA)
8.7-51	JC61-01066A	GUIDE-_M_INPUT;CLP-600,PET+GF30%,5V,T3.0	G0041	SNA
8.7-52	JC61-01176A	HOLDER-M-SPRING PR;CLP-600,PET+GF30%,-,W	H0022	SNA
8.7-53	6107-001248	SPRING-CS;SWP-B,-,PI1.3,D6.8,L19.5,-,-,I	S0040	SNA
8.8-1	JC61-00996A	BRACKET-P-MAIN FRONT;CLP-600,SECC,T1.2,W	B0013	SNA
8.8-2	JC66-00749A	GEAR-_M_IDLE_Z41;CLP-600,POM,M0.6,Z41,-,	G0011	SA
8.8-3	JC66-00750A	GEAR-_M_IDLE_Z43;CLP-600,POM,M0.6,Z43,-,	G0012	SA
8.8-4	JC66-00755A	LINK-P-ITB;CLP-600,SECC,L36.22,T1.6,¥Ö6.S	L0015	SNA
8.8-5	JC66-00753A	GEAR-_M_IDLE_Z79;CLP-600,POM,M0.6,Z79,-,	G0013	SA
8.8-6	JC66-00751A	GEAR-_M_RDCN FU_Z52/Z22;CLP-600,POM,M0.8	G0021	SA
8.8-7	JC66-00466A	GEAR-DEVE IDLE_Z41;CLP-500,POM,DE8903,M0	G0022	SA
8.8-8	JC66-00473A	GEAR-IDLE Z51;CLP-500,POM,DE8903,M0.8,Z5	G0027	SA
8.8-9	JC66-00468A	GEAR-DEVE RDCN;CLP-500,POM,M90-44,M0.5/M	G0023	SA
8.8-10	JC66-00831A	SHAFT-FUSER DRIVE;CLP-600,SUM24L,L77.5,-	S0004	SNA
8.8-11	6031-000022	WASHER-PLAIN;-,ID5.9,OD10.0,T0.13,BLK,PO		SNA
8.8-11	6031-000023	WASHER-PLAIN;-,ID5.9,OD10.0,T0.5,BLK,POL	W0001	SNA
8.8-11	6031-000252	WASHER-PLAIN;M6,ID6.2,OD10,T0.25,BLK,PA		SNA
8.8-11	6031-001051	WASHER-PLAIN;M4,ID4.1,OD7.0,T0.13,*,POLY	W2004	SNA
8.8-11	6031-001490	WASHER-PLAIN;POLYMIDE,-,ID7.1,OD14,T0.13		SNA
8.8-11	6031-001534	WASHER-PLAIN;POLY,M6,ID6.1,OD8.3,T0.13,B		SNA
8.8-12	JC66-01197A	SHAFT-DEVE K CLUTCH;CLP-600,SUM24L,L75.6		SNA
8.8-13	JC47-00006C	MEP-CLUTCH SPRING;-,CLP-600,4.0W,DC24V,0		SNA
8.8-14	JC66-00834A	SHAFT-DEVE DRV KMCY;CLP-600,SUM24L,L72.1	S0002	SNA
8.8-15	JC66-00833A	SHAFT-FEED DRIVE;CLP-600,SUM24L,L50.5,-,	S0003	SNA
8.8-16	JC66-00754A	GEAR-_M_RDCN FEED1_Z69;CLP-600,POM,M0.6,	G0020	SA
8.8-21	JC61-00997A	BRACKET-P-MAIN REAR;CLP-600,SECC,T1.2,W1	B0014	SNA
8.8-22	JC31-00041A	MOTOR DC-DEVE DRIVE;50M843A152,CLP-600,2	M0024	SA
8.8-23	6043-001115	PIN-PARALLEL(KEY);A,OD2.0,L14.0,ZPC(YEL)	P0014	SNA
8.8-24	JC31-00037C	MOTOR STEP-FU, DRIVE;M55SP-2NK,CLP-600,1	M0025	SA
8.8-25	JC66-00470A	GEAR-FEED DRIVE_Z37;CLP-500,POM,DE8903,M	G0024	SA
8.8-26	JC66-00746A	GEAR-_M_OPC DRV2_Z21;CLP-600,POM,M0.8,Z2	G0017	SA
8.8-27	JC66-00746B	GEAR-M_DEVE DRV2_Z21;CLP-600,POM,M0.8,Z2		SA
8.8-28	6107-001214	SPRING-ES;SWP(PW-2),BLACK,PI0.45,D5.35,L	S0041	SA
8.8-28	6107-001269	SPRING-ES;SWPB,-,PI0.4,D2.4,L21.4,-,-,ID		SNA
8.8-31	JB70-00168A	ICT-PIN ADF;SCX-1110F,STS303,D2.0,-,-,-	I0001	SA
8.8-32	6031-001255	WASHER-PLAIN;NYLON,CUTTING,ID5,OD9,T0.5,	W0004	SA
8.8-34	JC61-00426A	BUSH-8/5;ML-9400W,NTN B-F8-12,-,-,- NTP	B0026	SA
8.8-36	JC61-00699A	BUSH-D6/L4;CLP-500,BRONZE+ST,ID6.0,OD9.0	B0027	SA
8.8-38	6031-001002	WASHER-PLAIN;M17.5,ID6.1,OD17.5,T0.13,BL		SNA
8.8-35	6003-000301	SCREW-TAPTITE;BH,+,S,M4,L6,ZPC(YEL),SWRC		SNA
8.8-37	JF68-10532B	LABEL(P)-BAR CODE;CLP-500,YUPO PAPER,1		SNA
8.9-1	JC61-01041A	FRAME-_M_BASE MP;CLP-600,NPS,HR1360T,HB	F0005	SNA
8.9-2	JC66-00764A	ROLLER-IDLE FEED;CLP-600,POM,OD13.0,ID3.	R0013	SA
8.9-3	JC61-01274A	SPRING ETC-ROLLER;CLP-600,SUS304-WPB,0.7	S0032	SA
8.9-4	JC61-00387A	SPRING ETC-PAD;ML-9400W,SUS304WPB,PI0.5,	S0028	SA
8.9-5	JC61-01044A	HOLDER-_M_PAD;CLP-600,PC+ABS,T3.0,W54.0,	H0014	SNA
8.9-6	JC73-00132A	RPR-FRICTION PAD MP;ML-2150,NBB,53*9.8*T	R0019	SA
8.9-7	JC66-00775A	LEVER-_M_ACTUATOR EMPTY;CLP-600,ABS,T3.0	L0009	SNA
8.9-8	JC72-00772A	PMO-HOLDER SENSOR;MP;SCX-5100,ABS,BLACK,	P0039	SA
8.9-9	JC92-01662A	PBA SUB-MP_EMPTY SENSOR;CLP-600,SEC,KOREA,	P0006	SA
8.9-10	JC39-00431A	CBF HARNESS-MP;EMP2;CLP-600,CBF HARNESS,	C0019	SA
8.9-11	JC61-01060A	PLATE-P-GROUND BRACKET;CLP-600,SUS304,T0	P0021	SNA
8.9-12	JC72-00382B	PMO-BUSHING FEED;ML-1710,POM(DERLIN 8903	P0034	SA
8.9-13	JC66-00836A	ROLLER-FEED MP;F;CLP-600,SUM24L+EPDM,¥Ö6/S	R0010	SNA
8.9-14	JC72-41191B	PMO-BEARING SHAFT;ML-2150,POM,BLK,-,DE89	P0032	SA
8.9-15	JC61-01145A	BUSH-_M_ROLLER FEED;CLP-600,AT-15CF,ID6.	B0022	SA
8.9-16	6107-001249	SPRING-CS;SUS304-WPB,-,PI0.5,D8.8,L6,-,-	S0038	SNA
8.9-17	JC61-01047A	BRACKET-P-GEAR TRAY;CLP-600,SECC,T1.2,W5	B0009	SNA
8.9-18	JC66-00771A	GEAR-_M_IDLE PICKUP;CLP-600,POM,M0.8,SPU	G0010	SA
8.9-20	JC66-00769A	GEAR-_M_MP FEED;CLP-600,POM,M0.8,SPUR,Z1	G0014	SA
8.9-21	JC61-01127A	HOLDER-_M_CLUTCH GEAR;CLP-600,POM,ID6.0,	H0005	SA
8.9-22	JC66-00770A	GEAR-_M_IDLE FEED;CLP-600,POM,M0.8,SPUR,	G0009	SA
8.9-23	JC66-00767A	GEAR-_M_DRIVE IDLE;CLP-600,POM,M0.8,SPUR	G0003	SA
8.9-24	JC33-00017A	SOLENOID-MP;DLH-34L080-08,CLP-600,24V,8O	S0016	SA
8.9-25	JC66-00772A	CAM-_M_PICK UP MP;CLP-600,PC,-,ID6.1,BLK	C0003	SNA
8.9-26	JC61-00671A	HOLDER-M-BUSHING TX;ML-2150,POM,-,-,-,BL	H0020	SA
8.9-28	JC72-01003A	PMO-IDLE PICK UP MP;ML-2150,POM,WHITE,-,	P0042	SA
8.9-29	JC66-00453A	SHAFT-M-PICK UP MP;ML-2150,PC NH-1023,-,	S0006	SA
8.9-30	JC66-00768A	GEAR-_M_MP PICK UP;CLP-600,POM,M0.8,SPUR	G0015	SA
8.9-31	JC61-00003A	SPRING ETC--CAM MP;ML-6100,SUS304-WPB,0.	S0020	SA
8.9-32	JC66-00766A	GEAR-_M_HOLDER CAM;CLP-600,POM,M0.8,SPUR	G0008	SA
8.9-33	JC66-10202A	BEARING-PICK UP;ML-80,POM,-,-,-	B0003	SA
8.9-34	JC61-01045A	BRACKET-P-HODLER PICKUP;CLP-600,SECC,T1.	B0011	SNA
8.9-35	JC61-01048A	PLATE-_M_KNOCK UP;CLP-600,ABS+GF 20%,T2.	P0016	SNA
8.9-36	JC73-00141A	RPR-PAD CASSETTE;ML-1510,URETHANE SPONGE	R0020	SA

WWW.Bulkparts.pl

Service BOM(SA : Service Available, **SNA** : Service not Available, DNA:DELIVERY not AVAILABLE)

Drawer# (Section-No)	Part Code	Description	Location	Status (SA/SNA)
8.9-37	JC61-70913A	SPRING ETC-KNOCK UP MP;ML-2150,SUS304 WP	S0024	SA
8.9-38	JC72-01004A	PMO-IDLE KNOCK UP MP;ML-2150,POM,BLK,-,M	P0041	SA
8.10-1	JC63-00573A	COVER-M-REGI FRAME;CLP-600,HIPS,1.5,253.	C0049	SNA
8.10-2	JC61-01023A	FRAME-P-REGI;CLP-600,SECC,-,-,-,T1.2,250	F0014	SNA
8.10-3	JC61-01272A	SPRING ETC-BUSH REGI;CLP-600,SWP-B,0.4,-	S0019	SA
8.10-4	JC61-00669A	BUSH-M-ROLLER REGI U;ML-2150,POM(CE20),6	B0029	SA
8.10-6	JC72-00998A	PMO-ACTUATOR REGISHUTTER;ML-2150,ABS G/F	P0030	SA
8.10-7	JC66-00446A	SHAFT-REGI UPPER;ML-2150,SUM22,-,6,-,-,-	S0010	SA
8.10-8	JC67-00047A	CAP-M_BUSHING ACTUATOR;ML-2150,POM,-,-,-	C0006	SA
8.10-10	JC66-00648A	ROLLER-M_REGI IDLE S25;ML-2150,POM,11.9,	R0015	SA
8.10-11	JC66-00647A	ROLLER-M_REGI IDLE L25;ML-2150,POM,12.4,	R0014	SA
8.10-12	6107-001158	SPRING-TS;SUS304-WPB,-,PI0.4,D6.7,-,-,-,	S0042	SA
8.10-13	JC61-01094A	HOLDER-M-SENSOR;CLP-600,POM M90-44,T2.5,		SNA
8.10-13	JC61-01040A	HOLDER-M-SENSOR;CLP-600,HIPS,2.0,23.0,32	H0021	SA
8.10-14	0604-001095	PHOTO-INTERRUPTER;TR,90%,150mW,DIP-4,BK	P0013	SA
8.10-15	JC66-00765A	ROLLER-REGI LOWER;CLP-600,SUM24L,OD13.75	R0017	SA
8.10-16	JC61-01146A	BUSH-_M_ROLLER REGI L;CLP-600,POM,ID6.0,	B0023	SA
8.10-17	JC61-01128A	HOLDER-_M_GEAR REGI;CLP-600,POM,T1.3,ID6	H0010	SA
8.10-19	JC66-00774A	GEAR-M-REGI;CLP-600,POM,M0.8,Z19,-,NTR,	G0033	SA
8.10-21	JC61-01039A	FRAME-M-PICK UP;CLP-600,PC+ABS,YGP 5001A	F0010	SNA
8.10-22	JC92-01661A	PBA SUB-FCF_EMP_SENSOR;CLP-600,SEC,KOREA	P0004	SA
8.10-23	JC61-01049A	PLATE-P-GROUND REGI;CLP-600,C5210P,T0.2,	P0025	SNA
8.10-26	JC72-00719A	PMO-ACTUATOR EMPTY;SCX-5100,-,ABS,BLK,HB	P0029	SA
8.10-28	JC61-70950A	SPRING ETC-EXTENSION;ML-5000A,-,-,-,-,-,	S0022	SA
8.10-29	JC61-01038A	HOUSING-M-PICK UP;CLP-600,PC+GF20%,OD5,-	H0026	SNA
8.10-30	JC73-00224A	RUBBER-PICK UP MP;ML-3560,IR,D29.8,35,27	C4024	SA
8.10-32	JC66-00758A	SHAFT-PICK UP;CLP-600,PC+GF20%,72.5,4.0,	S0009	SA
8.10-33	JC66-00761A	GEAR-M-PICK UP;CLP-600,POM,M0.8,SPUR,Z50	G0032	SA
8.10-34	JC61-01029A	GUIDE-P-GEAR BRACKET;CLP-600,SECC,T1.2,1	G0059	SA
8.10-35	JC66-00759A	GEAR-M-MAIN;CLP-600,POM,M0.8,SPUR,Z31,-,	G0028	SA
8.10-36	JC66-00763A	GEAR-M-PICK UP IDLE;CLP-600,POM,M0.8,SPU	G0031	SA
8.10-37	JC66-00762A	GEAR-M-PICK UP IDLE 2;CLP-600,POM,M0.8,S	G0030	SA
8.10-38	JC66-00760A	GEAR-M-MP IDLE;CLP-600,POM,M0.8,SPUR,Z20	G0029	SA
8.10-39	JC33-00012B	SOLENOID-MAIN;DLH-34L080-10,CLP-600,24V,	S0015	SNA
8.11-1	JC61-01013A	GUIDE-_M_SCT PAPER UPPER;CLP-600,HIPS,2,	G0048	SNA
8.11-2	JC66-00903A	ROLLER-SHAFT FEED;CLP-600,SUM24L+EPDM,¥OS	R0018	SNA
8.11-3	JC72-41364A	PMO-BUSHING_P/U,MP;ML-6100,POM,BLACK,-,	P0035	SA
8.11-5	JC61-01021A	PLATE-P-GND FEED ROLLER;CLP-600,SUS304,T	P0020	SNA
8.11-9	JC66-00773A	GEAR-_M_FEED;CLP-600,POM,M0.8,Z27,-,NTR,	G0007	SA
8.11-11	JC61-01149A	GUIDE-_M_SCT PAPER LOWER;CLP-600,HIPS,HB	G0047	SNA
8.12-1	JC61-01022A	FRAME-M-CASSETTE;CLP-600,HIPS,HR-1360T,H	F0009	SNA
8.12-2	JC63-00572A	COVER-M-CASSETTE;CLP-600,ABS,3.0,429.6,1	C0046	SNA
8.12-3	JG61-70531A	SPRING ETC-LOCKER,PLATE;SI-6000,STS304WPB	S0025	SA
8.12-4	JC72-01073A	PMO-LOCKER PLATE;CLP-600,POM,WHITE,-,M90	P0043	SA
8.12-5	JC61-01024A	GUIDE-M-FRONT CASSETTE;CLP-600,HIPS,HB,-	G0056	SNA
8.12-6	JC61-01037A	STOPPER-M-GUIDE SIDE;CLP-600,POM,OD12.0,	S0044	SA
8.12-7	JC61-01026A	GUIDE-M-REAR;CLP-600,HIPS,HB,3.0,128.0,4	G0057	SA
8.12-8	JC68-01527A	LABEL(R)-CASSETTE COMMON,KOREA,YUPO,T0.2	L0004	SNA
8.12-9	6107-001200	SPRING-CS;SUS304-WPB,-,PI0.85,D21.85,L55	S0039	SNA
8.12-10	JC61-01030A	PLATE-P-KNOCK UP;CLP-600,SECC,T1.0,206.2	P0027	SNA
8.12-11	JC61-01129A	PLATE-KNOCK UP PAD;CLP-600,URETHANE SPON	P0017	SNA
8.12-13	JC61-01027A	GUIDE-P-SIDE LEFT;CLP-600,SECC,T1.2,52.5	G0060	SNA
8.12-15	JC61-00653A	BUSH-M-FINGER;ML-2150,POM,-,-,-,BLK,-	B0028	SA
8.12-16	JC63-00609A	COVER-M-GUIDE SIDE L;CLP-600,POM,T1.2,W	C0032	SNA
8.12-17	JC61-01025A	GUIDE-M-SIDE LOCK;CLP-600,ABS,HB,2.0,52.	G0058	SNA
8.12-18	JC61-01031A	PLATE-P-FINGER LEFT;CLP-600,SUS,T1.2,71.	P0018	SNA
8.12-19	JC61-01028A	GUIDE-P-SIDE RIGHT;CLP-600,SECC,T1.2,91.	G0061	SNA
8.12-20	JC61-01032A	PLATE-P-FINGER RIGHT;CLP-600,SUS,T1.2,71	P0019	SNA
Replacement	3903-000042	CBF-POWER CORD;DT,EU,FP3/YES,IEC320 C13/	C0022	SA
Replacement	JC69-00814F	BOX(P)-MAIN (UK);CLP-650N,DW,A-1,599,630		SA
#N/A	6003-000269	SCREW-TAPTITE;BH,+,-,S,M3,L6,ZPC(YEL),SW	Z4170	SA
#N/A	JC68-01518A	MANUAL-QIG;CLP-600,SEE,16 LANGUAGE,-,M15		SNA
#N/A	JC68-01518B	MANUAL-QRG;CLP-600,XSG,TURKEY,TURKEY,M-1		SNA
#N/A	JC92-01759A	PBA MAIN-PDL;CLP-650,SEC,KOREA,230*165*1		SA
#N/A	JC92-01787A	PBA SUB-SODIMM;CLP-650,SEC,KOREA,67.5*31		SA
#N/A	JC96-03588A	ELA HOU-NPC3_HIGH;CLP-600,SAMSUNG,NPC3,1	E0003	SA
#N/A	JC96-03967A	ELA UNIT-FUSER;CLP-650,SEC,EXPORT,-,-,-,		SA
#N/A	JC96-03987A	ELA UNIT-MAIN LINEPDL;CLP-650,SEC,EXPORT		SNA
#N/A	JC97-02211B	MEA UNIT-MAIN FRAME;CLP-650,SEC,EXPORT,-		SA
#N/A	JC99-01855A	PAA WOOD-PACKING;CLP-600,SAMSUNG,-,-,-,-		SNA
#N/A	JC99-01856B	PAA-LABEL_SEE;CLP-600/SEE,SEC,-,LABEL AS		SNA
#N/A	JC99-01955F	INA-ACCESSORY;CLP-650N/SEE,SEC,-,DAVINCI		SNA
#N/A	0201-001162	ADHESIVE-CYA;LOCTITE403,NTR,1250,20G		SNA
#N/A	0201-001183	ADHESIVE-AA;ARON ALPHA #202F,NTR,100,20G		SNA

www.partsparts.pl

Service BOM(SA : Service Available, **SNA** : Service not Available, DNA:DELIVERY not AVAILABLE)

Drawer# (Section-No)	Part Code	Description	Location	Status (SA/SNA)
#N/A	0201-001833	ADHESIVE-HM;30-NF,WHITE,200-600,-		SNA
#N/A	0202-001240	SOLDER-WIRE;HSE-01,-,D3,SN/0.5CU/0.03NI/		SNA
#N/A	0202-001492	SOLDER-WIRE FLUX;HSE-02 LFM48 SR-34 S,-,		SNA
#N/A	0203-001102	TAPE-OPP MASKING;OPP-2,T0.05,W100,L400M,		SNA
#N/A	0203-001159	TAPE-FILAMENT;#8915,T0.15,W12,L55000,CLR		SNA
#N/A	0203-001189	TAPE-ACETATE;#810,T0.05,W12,L65000,TRP,-		SNA
#N/A	0204-000469	THINNER;#4662,-,0.795,-		SNA
#N/A	0204-002978	FLUX;KSP-70L,-,84%,FLUX,SPRAY		SNA
#N/A	0205-001003	GREASE-BEARING;NYOGEL788,DAMPING GREASE,		SNA
#N/A	0205-001059	GREASE-BEARING;PETAMO GHV 133,BEIGE,15KG		SNA
#N/A	0205-001080	GREASE-BEARING;NYOGEL 774H,NOISE DAMPING		SNA
#N/A	0205-001144	GREASE-BEARING;SF-112,HANARL,NOISE TAMPI		SNA
#N/A	1103-001115	IC-EEPROM;24C32,4Kx8BIT,DIP,8P,300MIL,10		SNA
#N/A	2801-003321	CRYSTAL-UNIT;14.31818MHZ,20PPM,ATS-49/U,		SNA
#N/A	2801-003886	CRYSTAL-UNIT;12MHz,50ppm,28-AAA,16pF,50o		SNA
#N/A	2801-004451	CRYSTAL-UNIT;31.00504519MHZ,50PPM,49/S-4		SA
#N/A	3501-001263	RELAY-POWER;5V,530mW,10000mA,1FormA,7mS,		SA
#N/A	3702-000118	CONNECTOR-RIBBON;36P,FEMALE,ANGLE,AU		SNA
#N/A	3704-000349	SOCKET-IC;8P,DIP,SN,2.54MM		SNA
#N/A	3711-000198	HEADER-BOARD TO CABLE;1WALL,3P,1R,2.5MM,		SA
#N/A	3711-000203	HEADER-BOARD TO CABLE;1WALL,2P/3P,1R,7.9		SA
#N/A	3711-002000	HEADER-BOARD TO CABLE;BOX,18P,2R,2mm,STR		SNA
#N/A	3711-002808	HEADER-BOARD TO CABLE;BOX,7P,1R,2mm,STRA		SNA
#N/A	3711-002811	HEADER-BOARD TO CABLE;BOX,10P,1R,2mm,STR		SNA
#N/A	3711-002813	HEADER-BOARD TO CABLE;BOX,12P,1R,2mm,STR		SA
#N/A	3711-003035	HEADER-BOARD TO CABLE;BOX,14P,2R,2mm,STR		SA
#N/A	3711-003411	HEADER-BOARD TO CABLE;BOX,5P,1R,2mm,STRA		SNA
#N/A	3711-003981	HEADER-BOARD TO CABLE;BOX,28P,2R,2mm,STR		SA
#N/A	3711-004379	HEADER-BOARD TO CABLE;BOX,4P,1R,2MM,STRA		SA
#N/A	3722-000124	JACK-DIN;8P,-,AU,BLK,-		SNA
#N/A	3722-002303	JACK-USB;4P/1C,AU30U,BLK,ANGLE,B TYPE		SA
#N/A	6001-000568	SCREW-MACHINE;PH,+,M3,L8,NI PLT,SWRCH18A		SA
#N/A	6044-000001	RING-CS;ID3,OD3,T0.25,BLACK,SUS304	D4088	SNA
#N/A	6103-000101	SUPPORTER;DALS-10N,H10,NTR,NYLON6		SNA
#N/A	6902-000288	BAG PE;LDPE,T0.05,W250,L450,TRP,8.2		SNA
#N/A	6902-000332	BAG CONDUCTIVE;PE+CARBON,T0.1,W250,L500,		SNA
#N/A	6902-000390	BAG PE;LDPE,T0.05,W500,L450,TRP,8.2		SA
#N/A	6902-000655	BAG PE;HDPE,T0.03,W800,L1300,TRP,28,6M,T		SNA
#N/A	JB68-00073A	LABEL(R)-BAR CODE;SF-3000,PY,3816.5,T0.1		SNA
#N/A	JB68-00916A	LABEL RATING-BLANK;SF-340,SEC,TETRON,0.0		SNA
#N/A	JC02-00048A	TONER-GRINDED BLACK;CLP-600,SAK-79JG-K1,		SNA
#N/A	JC02-00049A	TONER-GRINDED CYAN;CLP-600,SAC-79JI-K1,C		SNA
#N/A	JC02-00050A	TONER-GRINDED MAGENTA;CLP-600,SAM-79GZ-K		SNA
#N/A	JC02-00051A	TONER-GRINDED YELLOW;CLP-600,SAY-79GZ-K1		SNA
#N/A	JC31-00050A	FAN;AD0424HB-C56,CLP-600,PBT,GF,-,3PIN,N		SA
#N/A	JC39-00366A	CBF HARNESS-SCF GND;SCX-4920N,CBF,UL1007	H1231	SA
#N/A	JC39-00398A	CBF HARNESS-PANEL;CLP-600,WIRE HARNESS,U	H2133	SA
#N/A	JC39-00423A	CBF HARNESS-STEPMOTOR;CLP-600,CBF HARNES		SA
#N/A	JC39-00432A	CBF HARNESS-BLDC;CLP-600,CBF HARNESS,UL1		SA
#N/A	JC39-00510A	CBF HARNESS-BLDC 2;CLP-600,CBF HARNESS,U	C0009	SA
#N/A	JC39-00585A	HARNESS-IN SMPS;CLP-650,WIRE HARNESS,UL3		SA
#N/A	JC39-00586A	HARNESS-IH BRACK;CLP-650,WIRE HARNESS,UL		SA
#N/A	JC39-00587A	HARNESS-PT MAIN;CLP-650,WIRE HARNESS,UL1		SA
#N/A	JC44-00116A	INVERTER-V3;CLP-600,-,50~60HZ,AC220~240V		SNA
#N/A	JC46-00255A	S/W APPLICATION-CD;-,ML-3560,-,PRT DRV,1		SNA
#N/A	JC46-00279A	S/W APPLICATION-CD;-,CLP-650,DRV,1.0,ENG		SNA
#N/A	JC60-00008A	FRANGE-M-OPC;CLP-600,PC,-,ID6,OD25,9.8,B		SNA
#N/A	JC60-00009A	SPACER-M-DR;CLP-600,RUBILLOY-K,-,ID6.0,O		SNA
#N/A	JC61-00025A	SPRING ETC-CS-CHARGE APOLLO;SF-5100,SUS	B2030	SNA
#N/A	JC61-00772A	BUSH-DEV DR;CLP-500,BRONZE,ID7.0,OD9.4,L		SNA
#N/A	JC61-00809A	BRACKET-_M_NPC;MLC-500,SECC,T0.8,-,-,-,-	B0005	SNA
#N/A	JC61-00993A	BRACKET-P-INT LOWER;CLP-600,SECC,T0.8,19		SNA
#N/A	JC61-00994A	BRACKET-P-INT UPPER;CLP-600,SECC,0.6T,14		SNA
#N/A	JC61-01090A	HOLDER-M-PAPER C,F;CLP-600,POM,-,W10.0,L		SNA
#N/A	JC61-01091A	HOLDER-M-PAPER C,R;CLP-600,POM,-,W9.0,L1		SNA
#N/A	JC61-01092A	HOLDER-M-TENSION;CLP-600,POM,-,W15,L17,B		SNA
#N/A	JC61-01093A	HOLDER-M-TRANSFER;CLP-600,POM,-,W21.2,L1		SNA
#N/A	JC61-01095A	HOLDER-M-DRAW;CLP-600,HIPS,T2.5,W33.6,L3		SNA
#N/A	JC61-01096A	GUIDE-M-BELT;CLP-600,POM,T2.0,W7.7,23.0,		SNA
#N/A	JC61-01097A	GUIDE-M-DRIVE;CLP-600,POM,T2.0,W6.4,11.1		SNA
#N/A	JC61-01098A	GUIDE-M-SAW,FIX;CLP-600,HIPS,T2.0,W17.2,		SNA
#N/A	JC61-01099A	FRAME-M-PTB;CLP-600,ABS+GF20,-,-,BLACK,T		SNA
#N/A	JC61-01100A	FRAME-M-DUMMY,F;CLP-600,ABS,-,-,BLACK,T2		SNA
#N/A	JC61-01101A	FRAME-M-DUMMY,R;CLP-600,ABS,-,-,BLACK,T2		SNA

WWW.ORIKparts.pl

Service BOM(SA : Service Available, **SNA** : Service not Available, DNA:DELIVERY not AVAILABLE)

Drawer# (Section-No)	Part Code	Description	Location	Status (SA/SNA)
#N/A	JC61-01102A	PLATE-P-SAW;CLP-600,SUS304 CSP 1/2H,T0.1		SNA
#N/A	JC61-01103A	PLATE-P-DUMMY,SAW;CLP-600,SUS 304 CSP 1/		SNA
#N/A	JC61-01104A	PLATE-P-TENSION;CLP-600,SUS 304 CSP 1/2H		SNA
#N/A	JC61-01105A	PLATE-P-GROUND,PTB;CLP-600,SUS 304 CSP 1		SNA
#N/A	JC61-01106A	PLATE-P-PAPER,C;CLP-600,SUS 304 CSP 1/2H		SNA
#N/A	JC61-01107A	PLATE-P-DUMMY,BK;CLP-600,SUS 304 CSP 1/2		SNA
#N/A	JC61-01108A	PLATE-P-HV,BK;CLP-600,SUS 304 CSP 1/2H,T		SNA
#N/A	JC61-01110A	HOLDER-M-CR,F;CLP-600,POM,T2,W8.5,L10.4,		SNA
#N/A	JC61-01113A	FRAME-M-DEV;CLP-600,ABS+GF5%,-,-,BLK,T2,		SNA
#N/A	JC61-01114A	HOUSING-M-OPC;CLP-600,ABS+GF5%,T2,W306,L		SNA
#N/A	JC61-01115A	PLATE-M-SIDE,F;CLP-600,PC,T2.5,W29.4,21.		SNA
#N/A	JC61-01116A	PLATE-M-SIDE,R;CLP-600,PC+GF20,T2.0,W62,		SNA
#N/A	JC61-01117A	PLATE-P-BIAS,DR;CLP-600,SUS 301CSP1/2H,T		SNA
#N/A	JC61-01118A	PLATE-P-BIAS,SR;CLP-600,SUS 301CSP1/2H,T		SNA
#N/A	JC61-01119A	PLATE-P-BIAS,CR;CLP-600,SUS301 CSP1/2H,T		SNA
#N/A	JC61-01124A	HOLDER-M-PADDLE;CLP-600,POM,T2.0,W38.2,L		SNA
#N/A	JC61-01678A	SPRING ETC-DEV_FRONT;CLP-600,SWP-B,0.65,		SA
#N/A	JC61-70932A	SPRING ETC-GUIDE DEVE;ML-5000A,-,D4.3,-	Z4159	SA
#N/A	JC61-70935A	SPRING ETC-SEPERATE P/UP;ML-5000A,-,-,-,		SA
#N/A	JC61-70967A	SPRING ETC-TR R;ML-5000A,SUS304 WPB,D4.5		SA
#N/A	JC62-00140A	SEAL-BLADE SIDE_BK;CLP-500,PE FORM,GRAY,		SNA
#N/A	JC62-00161A	SEAL-BRKT PTB,F;CLP-600,URETHANE SM55,-,		SNA
#N/A	JC62-00162A	SEAL-BRKT PTB,R;CLP-600,URETHANE SM55,-,		SNA
#N/A	JC62-00163A	SEAL-WASTE BOTTOM;CLP-600,URETHANE SM55,		SNA
#N/A	JC62-00164A	SEAL-BLADE,PTB;CLP-600,URETHANE SM55,-,5		SNA
#N/A	JC62-00166A	SEAL-WASTE FILM;CLP-600,URETHANE FILM,-,		SNA
#N/A	JC62-00167A	SEAL-COVER,WASTE;CLP-600,SM FOAM,GRAY,T4		SNA
#N/A	JC62-00168A	SEAL-BRACKET_BLADE;CLP-600,URETHANE FOAM		SNA
#N/A	JC62-00169A	SEAL-SUPPLY;CLP-600,PORON LE-20,GRAY,5,1		SNA
#N/A	JC62-00170A	SEAL-PADDLE;CLP-600,PORON LE20,GRAY,5,7.		SNA
#N/A	JC62-00171A	SEAL-BRACKET,CLN;CLP-600,SM FOAM,GRAY,T4		SNA
#N/A	JC62-00172A	SEAL-BRKT CLN_LOWER_F;CLP-600,PE FOAM,GR		SNA
#N/A	JC62-00173A	SEAL-BLADE INNER,R;CLP-600,PE TAPE(110PJ		SNA
#N/A	JC62-00174A	SEAL-BLADE INNER,F;CLP-600,PE TAPE(110PJ		SNA
#N/A	JC62-00175A	SEAL-PADDLE,INNER;CLP-600,URETHANE FOAM,		SNA
#N/A	JC62-00176A	SEAL-OPC,F;CLP-600,FELT+PORON,BROWN,3,W1		SNA
#N/A	JC62-00177A	SEAL-OPC,R;CLP-600,FELT+PORON,BROWN,3,W1		SNA
#N/A	JC62-00178A	SEAL-CLEANING_C/R;CLP-600,FLOCKING,DOBIR		SNA
#N/A	JC62-00179A	SEAL-BLADE SIDE;CLP-600,PE FOAM,GRAY,T2,		SNA
#N/A	JC62-00180A	SEAL-DEV FELT_F;CLP-600,PORON+TEFRON FEL		SNA
#N/A	JC62-00238A	SEAL-MANUAL SHEET;CLP-600,PE FOAM,GRAY,1		SNA
#N/A	JC62-00239A	SEAL-FILM COVER DEVE;CLP-600,PET FILM,WH		SNA
#N/A	JC62-00244A	SEAL-FILM,OPC;CLP-600,URETHANE FILM,NTR,		SNA
#N/A	JC62-00245A	SEAL-FILM,AGI_BELT;CLP-600,PET,NTR,T0.1,		SNA
#N/A	JC62-00246A	SEAL-FILM,REAR;CLP-600,PET FILM,NTR,T0.1		SNA
#N/A	JC62-00247A	SEAL-AGITATOR;CLP-600,PORON,GRAY,T5.0,OD		SNA
#N/A	JC62-00248A	SEAL-FILM COVER_TONER;CLP-600,PET FILM,C		SNA
#N/A	JC62-00264A	SEAL-BRKT_CLN_LOWER_R;CLP-600,PE FOAM,GR		SNA
#N/A	JC62-00265A	SEAL-DEV_FELT_R;CLP-600,PORON+TEFRON FEL		SNA
#N/A	JC62-00276A	INSULATION-INT_PEA;CLP-600,PC SHEET,0.43		SNA
#N/A	JC62-00277A	INSULATION-SMPS;CLP-600,PC SHEET,0.43,W2		SNA
#N/A	JC63-00570A	SHEET-AGITATOR_D;CLP-510,PET,0.2,-,-,WHI		SNA
#N/A	JC63-00576D	COVER-M-FEED;CLP-650N,HIPS,2.5,391.0,292		SA
#N/A	JC63-00600A	COVER-M-PAPER,C;CLP-600,HIPS,-,-,L256,-,		SNA
#N/A	JC63-00601A	COVER-M-DRAW;CLP-600,HIPS,T2.5,W21.4,L56		SNA
#N/A	JC63-00602A	COVER-M-WASTE;CLP-600,ABS ,T2,W248.5,L86		SNA
#N/A	JC63-00604A	COVER-M-DEV;CLP-600,ABS (EA0640),T2,W232		SNA
#N/A	JC63-00605A	COVER-M-SIDE,F;CLP-600,ABS,T2,W98.8,L26,		SNA
#N/A	JC63-00606A	COVER-M-SIDE, R;CLP-600,ABS,T2,W75.5,L36		SNA
#N/A	JC63-00607A	COVER-M-WASTE TONER,L;CLP-600,HIPS,T2.0,		SNA
#N/A	JC63-00608A	COVER-M-WASTE TONER,U;CLP-600,HIPS,T2.0,		SNA
#N/A	JC63-00645A	GROUND-WIRE;CLP-600,SUS304,T0.5,-,-,-,-		SNA
#N/A	JC63-00714A	SHEET-SENSOR,PTB;CLP-600,PET FILM,0.188T		SNA
#N/A	JC63-00721A	SHEET-WASTE,TONER;CLP-600,PC,0.38,77,210		SNA
#N/A	JC63-01016A	SHIELD-P-BRACKET INLET;CLP-600,SECC,T0.6		SNA
#N/A	JC64-00182A	HANDLE-M-PTB UNIT;CLP-600,HIPS,T2.5,W44.		SNA
#N/A	JC66-00471A	GEAR-FUSER DRIVE 1_Z47;CLP-500,POM,M90-4	G0025	SA
#N/A	JC66-00744A	GEAR-_M_DEVE CLUTCH_Z33;CLP-600,POM,M0.8	G0002	SA
#N/A	JC66-00745A	GEAR-_M_OPC DRV1_Z117;CLP-600,POM,M0.5,Z	G0016	SA
#N/A	JC66-00747A	GEAR-_M_PTB DRIVE1_Z41;CLP-600,POM,M0.6,	G0018	SA
#N/A	JC66-00748A	GEAR-_M_PTB DRIVE2_Z30;CLP-600,POM,M0.6,	G0019	SA
#N/A	JC66-00752A	GEAR-_M_FEED DRV_Z42;CLP-600,POM,M0.6,Z4	G0006	SA
#N/A	JC66-00788A	GEAR-_M_DRIVE,PTB;CLP-600,POM,M0.6,Z36,T		SNA
#N/A	JC66-00789A	GEAR-M-OPC;CLP-600,PC,M0.8,Z31,26.392,BL		SNA

www.cpuparts.pl

Service BOM(SA : Service Available, **SNA** : Service not Available, DNA:DELIVERY not AVAILABLE)

Drawer# (Section-No)	Part Code	Description	Location	Status (SA/SNA)
#N/A	JC66-00790A	GEAR-M-AGITATOR;CLP-600,POM,M0.6,Z26,15.		SNA
#N/A	JC66-00791A	GEAR-M-DEV;CLP-600,POM,M0.6,Z19,12.132,B		SNA
#N/A	JC66-00792A	GEAR-M-DEVE DRIVE;CLP-600,POM,M0.6,M0.8,		SNA
#N/A	JC66-00793A	GEAR-M-DRSR;CLP-600,POM,M0.6,M0.6,Z18,Z2		SNA
#N/A	JC66-00794A	GEAR-M-RDCN;CLP-600,POM,M0.6,M0.6,Z17,Z2		SNA
#N/A	JC66-00795A	GEAR-M-SUPPLY;CLP-600,POM,M0.6,Z20,12.77		SNA
#N/A	JC66-00796A	SHAFT-M-AGI,B;CLP-600,PC,221.6,10.5,BLAC		SNA
#N/A	JC66-00797A	SHAFT-M-AGI,A;CLP-600,PC,252.3,14,BLACK,		SNA
#N/A	JC66-00832A	SHAFT-OPC DRIVE C,M;CLP-600,SUM24L,L58.7	S0007	SNA
#N/A	JC66-00837A	SHAFT-OPC DRIVE K,Y;CLP-600,SUM24L,L58.7	S0008	SNA
#N/A	JC66-00917A	DRUM-PTB BELT;CLP-600,PE,-,¥Õ150.5,W473,S		SNA
#N/A	JC66-00918A	ROLLER-PAPER CHARGE;CLP-600,SUM24L+URETH		SNA
#N/A	JC66-00919A	ROLLER-BACKUP,CLN;CLP-600,SUM24L+AL6063		SNA
#N/A	JC66-00920A	ROLLER-TENSION,PTB;CLP-600,SUM24L+AL6063		SNA
#N/A	JC66-00921A	ROLLER-DRIVE,PTB;CLP-600,SUM23+EPDM,¥Õ14S		SNA
#N/A	JC66-00922A	ROLLER-TRANSFER;CLP-600,SUM23+NBR FOAM,		SNA
#N/A	JC66-00923A	SHAFT-OPC HINGE,F;CLP-600,SUM24L+NI,15,4		SNA
#N/A	JC66-00924A	SHAFT-OPC HINGE,R;CLP-600,SUM24L+NI,27,5		SNA
#N/A	JC66-00925A	SHAFT-OPC;CLP-600,SUS303,316,6,SILVER,-,		SNA
#N/A	JC66-00926A	ROLLER-OPC CHARGER;CLP-600,NBR+HDR+SUM22		SNA
#N/A	JC66-00927A	ROLLER-DEVE;CLP-600,NBR+HDR+SUS303,¥Õ12+S		SNA
#N/A	JC66-00928A	DRUM-OPC;CLP-600,AL,-,OD24,L248,GREEN,PH		SNA
#N/A	JC66-00929A	ROLLER-SUPPLY;CLP-600,URETHANE FOAM,¥Õ11S		SNA
#N/A	JC66-01150A	GEAR-IDLE OPC_Z51;CLP-600,POM,M0.5,Z51,-		SNA
#N/A	JC66-01198A	SHAFT-OPC DRIVE C;CLP-600,SUM24L,L58.7,		SNA
#N/A	JC66-01199A	SHAFT-OPC DRIVE K;CLP-600,SUM24L,L58.7,		SNA
#N/A	JC68-00573A	LABEL(R)-BARCODE;ML-4500,PET,T0.05,10mm,		SNA
#N/A	JC68-00690A	MANUAL-(CARD)WARRANTY CARD;ML-1210,XEU,E		SNA
#N/A	JC68-00966A	MANUAL-WARRANTY_CARD;COMMON,XST,THAILAND		SNA
#N/A	JC68-00967A	MANUAL-WARRANTY_CARD;COMMON,XSE,INDONESI		SNA
#N/A	JC68-01154A	LABEL(R)-POP(A);COMMON,-,PC+HOLOGRAM,T0		SNA
#N/A	JC68-01245A	MANUAL-WARRANTY CARD;COMMON,XSG,ARABIC,U		SNA
#N/A	JC68-01451A	LABEL-MAC ADDRESS;COMMON,SEC,ART100X30,0		SNA
#N/A	JC68-01540A	MANUAL-SHEET DEVE;COMMON,-,ENGLISH,-,ART		SNA
#N/A	JC68-01554A	LABEL(R)-OPEN CLOSE;COMMON,KOREA,YUPO,10		SNA
#N/A	JC68-01579A	MANUAL-NETWORK GUIDE;CLP-600N,SEC,COMM		SNA
#N/A	JC68-01584A	LABEL(P)-BLANK 90*25;CLP-510,SEE,ART,100		SA
#N/A	JC68-01700A	LABEL-INFORMATION;CLP-650,-,PVC,0.05T,8M		SNA
#N/A	JC68-10914D	LABEL(P)-SERIAL NO;ML-85,ART,9X15,G100,		SNA
#N/A	JC68-10914E	LABEL SERIAL-YELLOW;COMMON,SEC,ART,0.1,7		SNA
#N/A	JC68-10914F	LABEL SERIAL-CYAN;COMMON,SEC,ART,0.1,70,		SNA
#N/A	JC68-10914G	LABEL SERIAL-MAGENTA;COMMON,SEC,ART,0.1,		SNA
#N/A	JC68-10932A	LABEL(P)-BLANK(ML);ML-85,ART,70X60,G100,		SNA
#N/A	JC69-00736A	CUSHION-SET MAIN;CLP-600,EPDM,W616,L549		SNA
#N/A	JC69-00857A	CUSHION-SET CAP;CLP-600,EPDM,W616,L547,37		SNA
#N/A	JC69-00859A	PAD-DEVE CAP;CLP-600,PE FORM,5,280,203,-		SNA
#N/A	JC71-00002A	NPR-EARTH OPC APOLLO;SP5100,C5210P-H,0.		SNA
#N/A	JC72-01064A	PMO-HUB CLUTCH;CLP-500,POM,BLACK,-,DE890	P0040	SA
#N/A	JC72-01232A	PMO-DUMMY CLUTCH;CLP-500,POM,WHITE,-,DEL	P0038	SA
#N/A	JC72-01234A	PMO-DEVE CAP COVER;CLP-500,PP,BLACK,-,H5		SNA
#N/A	JC73-10017A	RPR-SEAL_BLOCK;ML-80,POLYURETHANE FOAM,T		SNA
#N/A	JC74-10901A	MPR-WASHER SUPPLY;ML-5000,POLY,ID4.1*OD1		SNA
#N/A	JC92-01663A	PBA SUB-K_CRUM;CLP-600,SEC,KOREA,K_CRUM,		SNA
#N/A	JC92-01664A	PBA SUB-C_CRUM;CLP-600,SEC,KOREA,C_CRUM,		SNA
#N/A	JC92-01665A	PBA SUB;CLP-600,SEC,KOREA,M_CRUM,37*16MM		SNA
#N/A	JC92-01666A	PBA SUB-Y_CRUM;CLP-600,SEC,KOREA,Y_CRUM,		SNA
#N/A	JC92-01672A	PBA SUB-OPC3_HIGH;ML-3560,SEC,KOREA,10/1	P0008	SA
#N/A	JC96-03798A	ELA UNIT-CR_CRUM;CLP-600,SEC,KOREA,-,-,-		SNA
#N/A	JC97-02245A	MEA UNIT-CLN BLADE;CLP-600,SEC,SECC 1.2T		SNA
#N/A	JC97-02246A	MEA UNIT-SUS BLADE;CLP-600,SEC,SECC 1.2T		SNA
#N/A	JC97-02247A	MEA UNIT-CLEANING,PTB;CLP-600,-,SECC+URE		SNA
#N/A	JC97-02682A	MEA UNIT-TUBE;CLP-600,SEC,EXPORT,-,-,-,-		SNA
#N/A	0201-001235	ADHESIVE-TS;DEH-390D,RED,400,-		SNA
#N/A	0202-001459	SOLDER-CREAM;S3X58-M405,-,D20~38§-,96.5SS		SNA
#N/A	0402-001189	DIODE-RECTIFIER;M4,400V,1A,TS-1,TP		SA
#N/A	0404-001084	DIODE-SCHOTTKY;BAT54A,30V,200MA,SOT-23,T		SA
#N/A	0501-000294	TR-SMALL SIGNAL;KSA708-Y,PNP,800mW,TO-92		SA
#N/A	0505-001592	FET-SILICON;SI4542DY,N/P,30V/-30V,6.9A/6		SNA
#N/A	0505-001824	FET-SILICON;FDS6690AS,N,30V,10A,0.012ohm		SNA
#N/A	0601-000003	LED;ROUND,RED/GRN,3.1MM,650/563NM,3.8X5.		SA
#N/A	0601-001332	LED;CBI,GRN,2.9mm,567nm		SNA
#N/A	0601-001383	LED;ROUND,RED,3.0MM,700NM		SNA
#N/A	0601-001619	LED;CBI,RED/GRN,3MM,635/568NM,6.35X7X6MM		SA
#N/A	0601-001830	LED;SMD,GRN,1.6x0.8x0.4mm,570nm,1.6x0.8x		SA

WWW.SUPPLYPARTS.PL

Service BOM(SA : Service Available, **SNA** : Service not Available, DNA:DELIVERY not AVAILABLE)

Drawer# (Section-No)	Part Code	Description	Location	Status (SA/SNA)
#N/A	0801-000794	IC-CMOS LOGIC;7S08,AND GATE,SOT-25,5,63M		SA
#N/A	0801-002326	IC-CMOS LOGIC;74LCX32,OR GATE,TSSOP,14,1		SA
#N/A	0801-002395	IC-CMOS LOGIC;74LCX373,LATCH,TSSOP,20P,1		SNA
#N/A	0801-002446	IC-CMOS LOGIC;74LCX14,SCHMITT INVERTER,T		SNA
#N/A	0803-003263	IC-CMOS LOGIC;74LCX07,HEX BUFFER,SOIC,14		SA
#N/A	0902-001933	IC-MICROPROCESSOR;RM7065C,600MHZ,-,EPAD,		SA
#N/A	0904-001989	IC-USC;ISP1582BS,-,HVQFN56,56P,8X8X0.85M		SA
#N/A	0904-002075	IC-BUS CONTROLLER;MV64420,-,TQFP,932P,35		SNA
#N/A	1001-000170	IC-ANALOG SWITCH;MC14051BD,SPDT CMOS,SOP		SA
#N/A	1003-001695	IC-CLOCK DRIVER;95V857AGLF,TSSOP,48P,244		SNA
#N/A	1003-001917	IC-CLOCK DRIVER;ICS345,SSOP,20P,8.65X3.9		SNA
#N/A	1006-001224	IC-LINE TRANSCEIVER;74LVX161284,TSSOP,48		SA
#N/A	1006-001316	IC-LINE DRIVER;FIN1047M,SOP,16P,10X6MM,-		SNA
#N/A	1103-001325	IC-EEPROM;34(F)C02-LF,256X8BIT,TSSOP,8P,		SNA
#N/A	1105-001580	IC-DRAM;HYB25D512160,-,512Mbit,32Mx16Bit		SA
#N/A	1107-001589	IC-FLASH MEMORY;-,128MBIT,16MX8/8MX16BIT		SNA
#N/A	1201-000167	IC-OP AMP;KA358,SOP,TP,8P,150MIL,DUAL,10		SNA
#N/A	1202-000164	IC-VOLTAGE COMP.;393,SOP,8P,150MIL,DUAL,		SA
#N/A	1203-002166	IC-POSI.FIXED REG.;1117DT25,DPAK,4P,240M		SNA
#N/A	1203-002233	IC-RESET;XC61F,SOT-23,3P,-,PLASTIC,0.7/1		SNA
#N/A	1203-002454	IC-POSI.FIXED REG.;FAN1117A,TO-252,3P,25		SA
#N/A	1203-003739	IC-DC/DC CONVERTER;MVPG31,DFN,12P,4X3MM,		SNA
#N/A	1203-003774	IC-DC/DC CONVERTER;SC4603,MSOP,10P,3X3MM		SNA
#N/A	1203-004071	IC-PWM CONTROLLER;FAN5026,TSSOP,28P,9.7X		SNA
#N/A	1205-002660	IC-CLOCK GENERATOR;ICS9248-81,SSOP,48P,3		SNA
#N/A	2007-000067	R-CHIP;15Kohm,1%,1/10W,TP,1608		SA
#N/A	2007-000069	R-CHIP;1OHM,1%,1/4W,TP,3216		SNA
#N/A	2007-000071	R-CHIP;22ohm,5%,1/10W,TP,1608		SA
#N/A	2007-000079	R-CHIP;1.8Kohm,5%,1/10W,TP,1608		SA
#N/A	2007-000080	R-CHIP;2Kohm,5%,1/10W,TP,1608		SA
#N/A	2007-000083	R-CHIP;3Kohm,5%,1/10W,TP,1608		SA
#N/A	2007-000084	R-CHIP;4.7Kohm,5%,1/10W,TP,1608		SA
#N/A	2007-000092	R-CHIP;15Kohm,5%,1/10W,TP,1608		SA
#N/A	2007-000093	R-CHIP;20Kohm,5%,1/10W,TP,1608		SA
#N/A	2007-000100	R-CHIP;68Kohm,5%,1/10W,TP,1608		SA
#N/A	2007-000102	R-CHIP;100Kohm,5%,1/10W,TP,1608		SA
#N/A	2007-000104	R-CHIP;150Kohm,5%,1/10W,TP,1608		SA
#N/A	2007-000105	R-CHIP;200Kohm,5%,1/10W,TP,1608		SA
#N/A	2007-000109	R-CHIP;1Mohm,5%,1/10W,TP,1608		SA
#N/A	2007-000116	R-CHIP;120ohm,5%,1/10W,TP,1608		SA
#N/A	2007-000122	R-CHIP;1.2Kohm,5%,1/10W,TP,1608		SA
#N/A	2007-000123	R-CHIP;1.5Kohm,5%,1/10W,TP,1608		SA
#N/A	2007-000239	R-CHIP;1.5Kohm,1%,1/10W,TP,1608		SA
#N/A	2007-000309	R-CHIP;10ohm,5%,1/10W,TP,1608		SA
#N/A	2007-000312	R-CHIP;10ohm,5%,1/4W,TP,3216		SA
#N/A	2007-000669	R-CHIP;2Kohm,1%,1/10W,TP,1608		SA
#N/A	2007-001014	R-CHIP;51OHM,5%,1/10W,TP,1608		SA
#N/A	2007-001044	R-CHIP;56ohm,5%,1/10W,TP,1608		SNA
#N/A	2007-001134	R-CHIP;68ohm,5%,1/10W,TP,1608		SA
#N/A	2007-001161	R-CHIP;75Kohm,5%,1/10W,TP,1608		SNA
#N/A	2007-001179	R-CHIP;8.2Kohm,5%,1/10W,TP,1608		SA
#N/A	2007-002901	R-CHIP;2.4Kohm,1%,1/10W,TP,1608		SA
#N/A	2007-002910	R-CHIP;30.1Kohm,1%,1/10W,TP,1608		SA
#N/A	2007-007239	R-CHIP;34.0Kohm,1%,1/10W,TP,1608		SNA
#N/A	2007-007507	R-CHIP;2.74Kohm,1%,1/10W,TP,1608		SNA
#N/A	2007-007937	R-CHIP;17.4Kohm,1%,1/10W,TP,1608		SNA
#N/A	2007-007967	R-CHIP;3.83Kohm,1%,1/10W,TP,1608		SNA
#N/A	2007-008315	R-CHIP;4.99ohm,1%,1/10W,TP,1608		SNA
#N/A	2007-008499	R-CHIP;1.54K ohm,1%,1/10W,TP,1608		SNA
#N/A	2007-008505	R-CHIP;17.8Kohm,1%,1/10W,TP,1608		SNA
#N/A	2007-008553	R-CHIP;29.4Kohm,1%,1/10W,TP,1608		SNA
#N/A	2011-000660	R-NET;1Kohm,5%,1/16W,L,CHIP,8P,TP,3.2x1.		SA
#N/A	2011-000881	R-NET;33ohm,5%,1/16W,L,CHIP,8P,TP,3.2x1.		SA
#N/A	2011-001011	R-NET;10Kohm,5%,1/16W,L,CHIP,8P,TP,3.2x1		SNA
#N/A	2011-001097	R-NET;5.1KOHM,5%,1/16W,L,CHIP,8P,TP		SNA
#N/A	2011-001193	R-NET;68ohm,5%,1/16W,L,CHIP,8P,TP		SA
#N/A	2011-001261	R-NET;33ohm,5%,1/16W,L,CHIP,8P,TP,2.0x1.		SA
#N/A	2011-001334	RC-NETWORK;1K/5.1K/39ohm,10%,150pF,-,6V,		SNA
#N/A	2011-001402	R-NET;56ohm,5%,1/16W,L,CHIP,8P,TP,2.0X1.		SA
#N/A	2011-001449	R-NET;22ohm,5%,1/16W,L,-,4P,TP,1.0x1.0x0		SA
#N/A	2203-000160	C-CER,CHIP;0.0015NF,0.25PF,50V,C0G,TP,16		SA
#N/A	2203-000257	C-CER,CHIP;10nF,10%,50V,X7R,1608		SA
#N/A	2203-000332	C-CER,CHIP;0.012nF,5%,50V,C0G,1608		SNA
#N/A	2203-000815	C-CER,CHIP;0.033nF,5%,50V,C0G,1608		SA

www.stukparts.pl

Service BOM(SA : Service Available, **SNA** : Service not Available, DNA:DELIVERY not AVAILABLE)

Drawer# (Section-No)	Part Code	Description	Location	Status (SA/SNA)
#N/A	2203-001086	C-CER,CHIP;0.005nF,0.25pF,50V,NP0,TP,160		SA
#N/A	2203-001598	C-CER,CHIP;2200nF,+80-20%,16V,Y5V,2012		SA
#N/A	2203-001607	C-CER,CHIP;0.22nF,5%,50V,NP0,1608		SA
#N/A	2203-005105	C-CER,CHIP;0.68nF,5%,50V,C0G,1608		SA
#N/A	2203-005249	C-CER,CHIP;100nF,10%,50V,X7R,1608		SNA
#N/A	2203-005819	C-CER,CHIP;1000nF,+80-20%,16V,Y5V,-,1608		SNA
#N/A	2203-006818	C-CER,CHIP;47000nF,20%,6.3V,X5R,3216		SA
#N/A	2401-004099	C-AL;330UF,20%,6.3V,NXB,TP,6.3X11MM,5		SA
#N/A	2402-000008	C-AL,SMD;47uF,20%,16V,GP,TP,6.6x6.6x5.4		SA
#N/A	2402-000117	C-AL,SMD;10uF,20%,35V,GP,TP,5.3x5.3x5.4		SA
#N/A	2402-001042	C-AL,SMD;100uF,20%,16V,GP,TP,6.6x6.6x5.4		SA
#N/A	2402-001049	C-AL,SMD;10uF,20%,16V,GP,TP,3.3x3.3x5.4		SA
#N/A	2402-001106	C-AL,SMD;33UF,20%,50V,WT,TP,8.3X8.3X6.3M		SA
#N/A	2402-001127	C-ORGANIC;220UF,20%,6.3V,-,TP,7343		SNA
#N/A	2503-001051	C-NETWORK;100NFX4,20%,16V,-,2012, 4ARRAY		SNA
#N/A	2703-002055	INDUCTOR-SMD;2.2UH,20%,6363		SNA
#N/A	2703-002539	INDUCTOR-SMD;6.8uH,20%,6965		SNA
#N/A	2703-002871	INDUCTOR-SMD;0.82uH,20%,6965		SNA
#N/A	2801-001375	CRYSTAL-UNIT;10MHz,20ppm,28-AAA,16pF,45o		SNA
#N/A	2801-004414	CRYSTAL-UNIT;25MHZ,50PPM,HC-49/S,12PF,50		SNA
#N/A	2901-001178	FILTER-EMI SMD;25V,2A,-,100000pF,2x1.25x		SA
#N/A	3301-000317	BEAD-SMD;120ohm,2012,TP,-,-		SNA
#N/A	3301-000344	BEAD-RADIAL;200ohm,3.5x0.6x6.5mm,7000mA,		SNA
#N/A	3301-001067	BEAD-SMD;600OHM,1608,-,-,-		SNA
#N/A	3301-001240	BEAD-SMD;120ohm,1.6x0.8x0.8mm,200mA,TP,-		SNA
#N/A	3301-001270	BEAD-SMD;120ohm,3216,150mA,TP,,,0.2ohm		SNA
#N/A	3301-001655	BEAD-SMD;33ohm,3216,3000mA,TP,16ohm/39MH		SA
#N/A	3404-000165	SWITCH-TACT;12V,50mA,160gf,6x6mm,SPST		SA
#N/A	3704-001176	SOCKET-IC;200P,SO DIMM,AUF,0.6MM		SA
#N/A	3709-001320	CONNECTOR-CARD EDGE;200,0.6mm,-,AUF,SODI		SA
#N/A	3711-000840	HEADER-BOARD TO CABLE;BOX,30P,2R,2MM,STR		SNA(DNA)
#N/A	3711-002807	HEADER-BOARD TO CABLE;BOX,6P,1R,2mm,STRA		SNA
#N/A	3711-003408	HEADER-BOARD TO CABLE;BOX,2P,1R,2mm,STRA		SNA
#N/A	3711-003409	HEADER-BOARD TO CABLE;BOX,3P,1R,2mm,STRA		SNA
#N/A	3711-003410	HEADER-BOARD TO CABLE;BOX,4P,1R,2mm,STRA		SNA
#N/A	3711-003942	HEADER-BOARD TO CABLE;BOX,2P,1R,2MM,STRA		SA
#N/A	3711-004349	HEADER-BOARD TO CABLE;BOX,3P,1R,2MM,STRA		SA
#N/A	3711-004487	HEADER-BOARD TO BOARD;BOX,80P,2R,0.6MM,S		SA
#N/A	3722-001319	JACK-MODULAR;8P/8C,STANDARD,ANGLE,INVE		SA
#N/A	6601-001340	BEARING-BALL;6808ZZ,ID40,OD52,L7,SUJ2,	B0001	SNA
#N/A	6601-001341	BEARING-BALL;688ZZ,ID8,OD16,L5,SUJ2,-	B0002	SNA
#N/A	6902-000444	BAG PE;LDPE,T0.05,W250,L350,TRP,28,23-PE		SNA
#N/A	JC07-00003A	LCD-DISPLAY(XEV);VHX1620BHRC9,SCX-5312F/		SA
#N/A	JC13-00029A	IC ASIC-DAVINCI;LPEC2,CLP-600,208,3.3V,-		SA
#N/A	JC13-00030A	IC ASIC-HYPER_C;HYPER-C CLP-600,256,3.3V		SA
#N/A	JC39-00306A	CBF HARNESS-LCD;CLP-500,WIRE,UL2877,14-1		SA
#N/A	JC39-00399A	CBF HARNESS-PANEL;CLP-600,WIRE HARENSS,U		SNA
#N/A	JC39-00425A	CBF HARNESS-SET_CRU;CLP-600,CBF HARNESS,		SA
#N/A	JC39-00429A	CBF HARNESS-THERMAL;CLP-600,CBF HARNESS,U		SA
#N/A	JC39-00442A	CBF HARNESS,NEW_FUSER;CLP-600,CBF HARNES		SA
#N/A	JC39-00508A	CBF HARNESS-GND2;CLP-600,CBF HARNESS,UL1		SA
#N/A	JC41-00331A	PCB-MAIN;CLP-650,FR4,6L,-,1.6T,165*230,-		SNA
#N/A	JC41-00332A	PCB-RAM DIMM;CLP-650,FR4,6L,-,1.6T,162.2		SNA
#N/A	JC61-01109A	BRACKET-SLN,PTB;CLP-600,SECC,T1.2,W16.		SNA
#N/A	JC61-01111A	HOLDER-M_CRUM;CLP-600,ABS,3,W11,L12.15,B		SNA
#N/A	JC61-01120A	PLATE-P_CRUM;CLP-600,C1720,T0.15,W2,L5.2		SNA
#N/A	JC61-01121A	BRACKET-P-SUS BLADE;CLP-600,SECC,T1.0,W2		SNA
#N/A	JC61-01122A	BRACKET-P-CLEANING;CLP-600,SECC,1.2,230,		SNA
#N/A	JC61-01123A	BLADE-DOCTOR;CLP-600,SUS301-CSP 1/2H,-,W		SNA
#N/A	JC61-01144A	BUSH-_M_BALL BEARING;CLP-600,PPS,ID34.6,	B0021	SNA
#N/A	JC61-01280A	BLADE-CLEANING,PTB;CLP-600,URETHANE,-,W1		SNA
#N/A	JC61-01282A	BLADE-CLEANING;CLP-600,URETHAN,TRP,W11*L		SNA
#N/A	JC61-01445A	FIXER-P-INNER PIPE;CLP-600,SUS 304,T0.3,		SNA
#N/A	JC61-01446A	FIXER-M INNER CAP;CLP-600,PPS+GF40%,T2.5		SNA
#N/A	JC61-01447A	SUPPORT-P-TENSION KEY;CLP-600,SUS,T0.5,R		SNA
#N/A	JC61-01448A	FIXER-M INNER PIPE KEY;CLP-600,PPS+GF40%		SNA
#N/A	JC62-00142A	HEAT SINK-P-MC2;SCX-6320F,BRONZE,0.5,7,2		SNA
#N/A	JC62-00309A	TUBE-BLOWER;CLP-600,POLYETHYLENE,-,OD14.		SNA
#N/A	JC63-00186A	SHEET-GUIDE ADF;SCX-6320F,PET,0.125T,-,-		SNA
#N/A	JC63-00896A	FILTER-TONER;CLP-600,POLYESTERE,10.0T,W2		SA
#N/A	JC63-00904A	SHEET-FILTER TONER;CLP-600,PET,T0.125,W2		SA
#N/A	JC63-01029A	SHEET-PTB CLEANING;CLP-600,PET,T0.188,W1		SA
#N/A	JC66-00800A	ROLLER-PRESSURE;CLP-600,STKM+RUBBER,D36.	R0016	SA
#N/A	JC66-01039A	GEAR-M_CAP;CLP-600,PPS+GF40%,1,36,19.8,B		SNA

www.ourparts.pl

Service BOM(SA : Service Available, **SNA** : Service not Available, DNA:DELIVERY not AVAILABLE)

Drawer# (Section-No)	Part Code	Description	Location	Status (SA/SNA)
#N/A	JC66-01239A	ROLLER-HEAT IH;CLP-600,STKM,36.4,L254,-,		SNA
#N/A	JC67-00104A	BRUSH-CARBON;ML-3560,SM190,-,D9,9.5,-,-	B0020	SNA
#N/A	JC67-00129A	CAP-M_END;CLP-600,PPS+GF40%,T2,14.2,"ø34S		SNA
#N/A	JC68-01727A	MANUAL-INFORMATION;CLP-650,SEC,21LANG,WO		SNA
#N/A	JC71-00051A	ELECTRODE-FU;ML-3560,T5.5,-,D28,SME19		SNA
#N/A	JC71-00052A	ELECTRODE-P-SUPPORT;ML-3560,T0.2,-,D27.6		SNA
#N/A	JC72-01376A	SPONGE-COVER LSU;CLP-600,POLYESTERE,-,T0		SNA
#N/A	JC72-01378A	SPONGE-FRAME LOWER;CLP-600,POLYESTERE,-,		SNA
#N/A	JC72-01379A	SPONGE-SEALING_LSU;CLP-600,POLYESTERE,-,		SNA
#N/A	JC92-01667A	PBA SUB-PTB_CRUM;CLP-600,SEC,KOREA,PTB_C		SNA
#N/A	JC92-01668A	PBA SUB-COLOR_REGI;CLP-600,SEC,KOREA,COL		SNA
#N/A	JC97-02404A	MEA UNIT-GUIDE PAPER;CLP-600,SEC,EXPORT,	M0016	SA
#N/A	0401-000116	DIODE-SWITCHING;MMSD914T1,100V,200MA,SOD		SNA
#N/A	0402-000129	DIODE-RECTIFIER;1N4003,200V,1A,DO-41,TP		SA
#N/A	0407-000101	DIODE-ARRAY;DA204K,20V,100mA,C2-3,SOT-23		SA
#N/A	0501-000010	TR-SMALL SIGNAL;KSC1008,NPN,800mW,TO-92,		SA
#N/A	0501-000279	TR-SMALL SIGNAL;KSA1182-Y,PNP,150mW,SOT-		SA
#N/A	0501-000457	TR-SMALL SIGNAL;MMBT2222A,NPN,350MW,SOT-		SA
#N/A	0505-001350	FET-SILICON;NDT2955,P,-60V,-2.5V,0.3OHM,		SA
#N/A	0801-002567	IC-CMOS LOGIC;74HCT273,D FLIP FLOP,SOP,2		SNA
#N/A	0803-003264	IC-CMOS LOGIC;74LCX06,HEX INVERTER/BUFFE		SNA
#N/A	0903-001355	IC-MICROCONTROLLER;S3C2510A,32BIT,BGA,41		SA
#N/A	1003-001535	IC-MOTOR DRIVER;A3977SLP,TSSOP,28P,9.6X4		SA
#N/A	1103-001321	IC-EEPROM;24WC128,16KX8BIT,SOP,8P,5X4MM,		SNA
#N/A	1105-001357	IC-DRAM;K4S281632,-,128NBIT,4X2MX16BIT,T		SA
#N/A	1107-001286	IC-FLASH MEMORY;29LV160,2MX8/1MX16BIT,TS		SNA
#N/A	1203-002220	IC-POSI.ADJUST REG.;LD1117,DPAK,3P,240MI		SA
#N/A	1205-002339	IC-CLOCK GENERATOR;CY25811SC,SOIC,8P,150		SA
#N/A	1205-002593	IC-TRANSCEIVER;E-STE100P,TQFP,64P,10X10M		SNA
#N/A	2005-000168	R-WIRE WOUND,NON;0.22ohm,5%,2W,AA,BK,4x1		SA
#N/A	2007-000033	R-CHIP;0ohm,5%,1/4W,TP,3216		SA
#N/A	2007-000043	R-CHIP;1Kohm,1%,1/10W,TP,1608		SA
#N/A	2007-000052	R-CHIP;10Kohm,1%,1/10W,TP,1608		SA
#N/A	2007-000070	R-CHIP;0ohm,5%,1/10W,TP,1608		SA
#N/A	2007-000074	R-CHIP;100ohm,5%,1/10W,TP,1608		SA
#N/A	2007-000076	R-CHIP;330ohm,5%,1/10W,TP,1608		SA
#N/A	2007-000077	R-CHIP;470ohm,5%,1/10W,TP,1608		SA
#N/A	2007-000078	R-CHIP;1Kohm,5%,1/10W,TP,1608		SA
#N/A	2007-000086	R-CHIP;5.6Kohm,5%,1/10W,TP,1608		SA
#N/A	2007-000090	R-CHIP;10Kohm,5%,1/10W,TP,1608		SA
#N/A	2007-000094	R-CHIP;22Kohm,5%,1/10W,TP,1608		SA
#N/A	2007-000096	R-CHIP;30Kohm,5%,1/10W,TP,1608		SA
#N/A	2007-000098	R-CHIP;56Kohm,5%,1/10W,TP,1608		SA
#N/A	2007-000113	R-CHIP;33ohm,5%,1/10W,TP,1608		SA
#N/A	2007-000115	R-CHIP;82ohm,5%,1/10W,TP,1608		SNA
#N/A	2007-000134	R-CHIP;33Kohm,5%,1/10W,TP,1608		SA
#N/A	2007-000287	R-CHIP;100OHM,1%,1/10W,TP,1608		SA
#N/A	2007-000475	R-CHIP;1Mohm,1%,1/10W,TP,1608		SA
#N/A	2007-000539	R-CHIP;200ohm,5%,1/10W,TP,1608		SA
#N/A	2007-000608	R-CHIP;240ohm,5%,1/10W,TP,1608		SA
#N/A	2007-000839	R-CHIP;39ohm,5%,1/10W,TP,1608		SA
#N/A	2007-000965	R-CHIP;2Kohm,5%,1/10W,TP,1608		SA
#N/A	2007-001002	R-CHIP;510ohm,5%,1/10W,TP,1608		SA
#N/A	2007-007226	R-CHIP;249ohm,1%,1/10W,TP,1608		SNA
#N/A	2007-007276	R-CHIP;178ohm,1%,1/10W,TP,1608		SNA
#N/A	2007-007611	R-CHIP;56.2ohm,1%,1/10W,TP,1608		SNA
#N/A	2007-007613	R-CHIP;121ohm,1%,1/10W,TP,1608		SNA
#N/A	2008-000166	R-FUSIBLE;56ohm,5%,1/4W,AA,TP,2.6x6.7mm		SA
#N/A	2011-001094	R-NET;39OHM,5%,1/16W,L,CHIP,8P,TP		SA
#N/A	2203-000041	C-CER,CHIP;0.01nF,0.25pF,50V,C0G,1608		SA
#N/A	2203-000189	C-CER,CHIP;100nF,+80-20%,25V,Y5V,1608		SA
#N/A	2203-000192	C-CER,CHIP;100nF,+80-20%,50V,Y5V,TP,2012		SA
#N/A	2203-000236	C-CER,CHIP;0.1nF,5%,50V,C0G,1608		SA
#N/A	2203-000426	C-CER,CHIP;0.018nF,5%,50V,C0G,1608		SA
#N/A	2203-000440	C-CER,CHIP;1nF,10%,50V,X7R,1608		SA
#N/A	2203-000626	C-CER,CHIP;0.022nF,5%,50V,C0G,1608		SA
#N/A	2203-000681	C-CER,CHIP;0.027nF,5%,50V,C0G,1608		SA
#N/A	2203-000783	C-CER,CHIP;0.33nF,5%,50V,C0G,1608		SA
#N/A	2203-000998	C-CER,CHIP;0.047nF,5%,50V,C0G,1608		SA
#N/A	2203-002392	C-CER,CHIP;220nF,+80-20%,50V,Y5V,2012		SA
#N/A	2401-000207	C-AL;100uF,20%,50V,WT,TP,8x12,5		SNA
#N/A	2401-002300	C-AL;47uF,20%,50V,GP,TP,6.3x11,5		SA
#N/A	2404-000284	C-TA,CHIP;10uF,20%,16V,-,TP,3528		SA
#N/A	2404-001102	C-TA,CHIP;33uF,20%,16V,GP,TP,6032,-		SNA

www.urukparts.pl

Service BOM(SA : Service Available, **SNA** : Service not Available, DNA:DELIVERY not AVAILABLE)

Drawer# (Section-No)	Part Code	Description	Location	Status (SA/SNA)
#N/A	2802-001069	RESONATOR-CERAMIC;7.37MHz,0.5%,TP,4.7x4.		SNA
#N/A	3301-000325	BEAD-SMD;60ohm,3.2x2.5x1.3mm,400mA,TP,,,		SNA
#N/A	3710-002211	SOCKET-BOARD TO BOARD;80P,2R,0.8MM,SMD-S		SNA
#N/A	6009-001396	SCREW-SPECIAL;PH,+,-,M3,L10.3,ZPC(BLK),S		SNA
#N/A	6044-000125	RING-E;ID4,OD9,T0.6,PASS,STSC	R0004	SA
#N/A	JB13-00004A	IC ASIC-OPE;SF-3100,HT48C5,SSOP,48P,16.1		SA
#N/A	JC39-00421A	CBF HARNESS-SOLENOID;CLP-600,CBF HARNESS		SA
#N/A	JC39-00422A	CBF HARNESS-SET_CR;CLP-600,CBF HARNESS,U		SA
#N/A	JC39-00575A	CBF HARNESS-FAN;CLP-600,CBF-HARNESS,UL10		SA
#N/A	JC39-00584A	HARNESS-IH FUSER;CLP-650,WIRE HARNESS,UL		SA
#N/A	JC39-00588A	HARNESS-TEMP;CLP-600,WIRE HARNESS,UL1061		SA
#N/A	JC41-00168A	PCB-ITB KEY;CLP-500,FR-1,1L,-,1.6,13*17.		SNA
#N/A	JC41-00263A	PCB SUB-DRIVER;CLP-600,FR-4,2L,-,1.6T,12		SNA
#N/A	JC41-00265A	PCB SUB-DEVE_CRUM;CLP-600,FR-4,2L,-,1.6T		SNA
#N/A	JC41-00270A	PCB SUB-PCI NPC;ML-3560,FR-4,6 LAYER,-,1		SNA
#N/A	JC41-00274A	PCB SUB-LCD_PANEL;CLP-600, FR-1,1,-,1.6T		SNA
#N/A	JC61-00995A	BRACKET-P-DRAW_PTB;CLP-600,SECC,T1.0,W45		SNA
#N/A	JC61-01017A	HOLDER-_M_MIDDLE PART;CLP-600,PET+GF30%,		SA
#N/A	JC70-10961A	IPR-TERMINAL FU;ML-165,C5210P,-,T0.3,-,-	K3422	SA
#N/A	JC72-01140A	PMO-COVER FUSER AC;CLP-500,PBT+GF30%,BLA	Z2607	SA
#N/A	JC72-01377A	SPONGE-FAN;CLP-600,POLYESTERE,-,T3.8,W18		SNA
#N/A	JC73-00226A	RUBBER-PICK UP;CLP-600,EPDM+IR,-,30,-,GR		SA
#N/A	JC96-02686B	ELA UNIT-ROLLER P/UP MP;ML-3560,XEROX/SE	K3144	SA
#N/A	JC97-02150A	MEA UNIT-REGI;CLP-600,SEC,EXPORT,-,-,-,-		SA
#N/A	0205-001067	GREASE-GRAPHITE;NYOGEL 756G,HYDRO CARBON		SNA
#N/A	1103-001183	IC-EEPROM;24C04,512x8,SOP,8P,5x4mm,2.5/5		SA
#N/A	1404-001141	THERMISTOR-NTC;5.6Kohm,5%,3200K,2.1mW/C,		SNA
#N/A	6044-000231	RING-E;ID5.0,OD11.0,T0.6,PASS,STS304	R0006	SA
#N/A	JC39-00420A	CBF HARNESS-FEED;CLP-600,CBF HARNESS,UL1		SA
#N/A	JC39-00427A	CBF HARNESS-DEVE_IF;CLP-600,CBF HARNESS,		SA
#N/A	JC39-00430A	CBF HARNESS-FCF_EMPT;CLP-600,CBF HARNESS		SA
#N/A	JC41-00169A	PCB-TEMPERATURE;CLP-500,FR-1,1L,-,1.6,22		SNA
#N/A	JC41-00225A	PCB SUB-GINKGO_ITB;CLP-500,FR-4,2L,-,1.6		SNA
#N/A	JC41-00266A	PCB SUB-COLOR_REGI;CLP-600,FR-1,1L,-,1.6		SNA
#N/A	JC61-00705A	HOLDER-M-PICKUP MP;ML-2150,POM,-,-,BLK	P2062	SA
#N/A	JC61-70929A	SPRING ETC-HV LARGE;ML-5000A,SUS304-WPB,		SA
#N/A	JC70-40912A	ICT-SHAFT HV LARGE;ML-5000A,SWCH18A,-,-,	S4027	SA
#N/A	2001-000281	R-CARBON;100OHM,5%,1/8W,AA,TP,1.8X3.2MM		SA
#N/A	3711-005851	HEADER-BATTERY;NOWALL,2P,2.4*5.25MM,SATTE		SA
#N/A	JC41-00133A	PCB-SENSOR;SCX-5100,FR-1,1L,-,1.6T,22X12		SNA
#N/A	JC41-00264A	PCB SUB-DEVE_CRUM_AC;CLP-600,FR-1,1L,-,1		SNA

www.dmparts.pl