Printer

Printer unit

Figure 9-1 Printer-unit major assemblies (1 of 2)

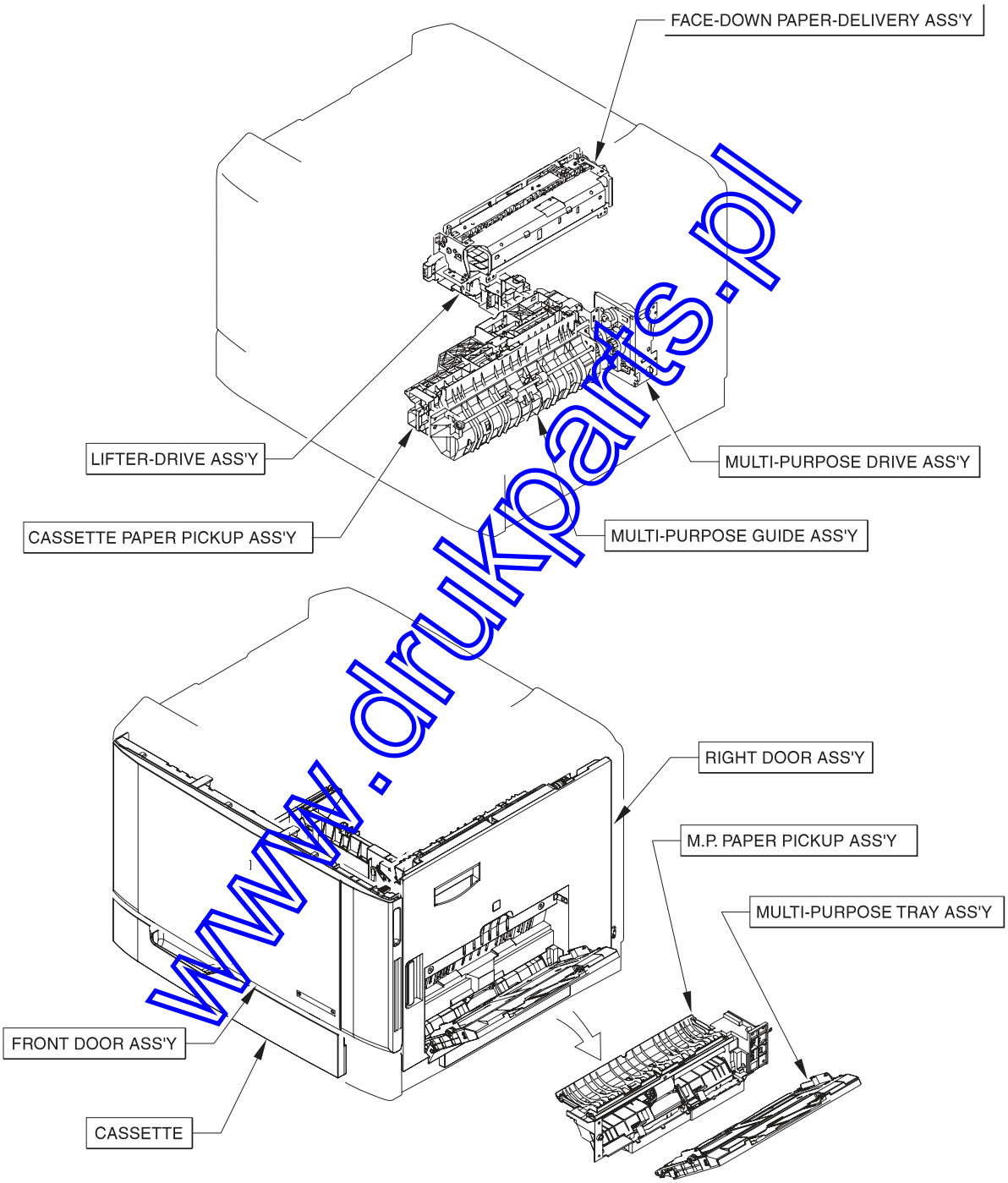

www.drukparts.pl

Figure 9-2 Printer-unit major assemblies (2 of 2)

DUPLEX MODEL

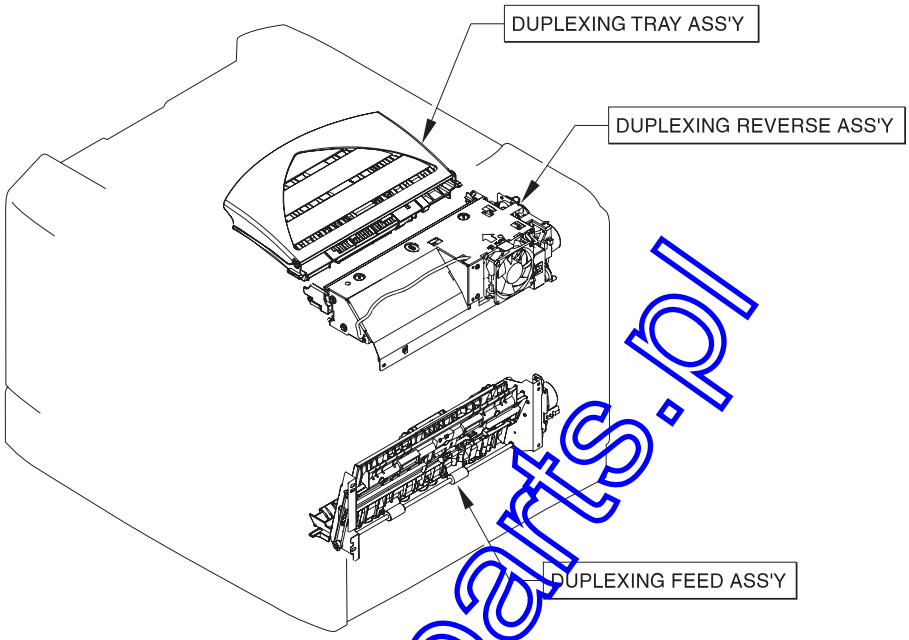

www.drukparts.pl

Printer parts

Figure 9-3 Printer external covers and panels

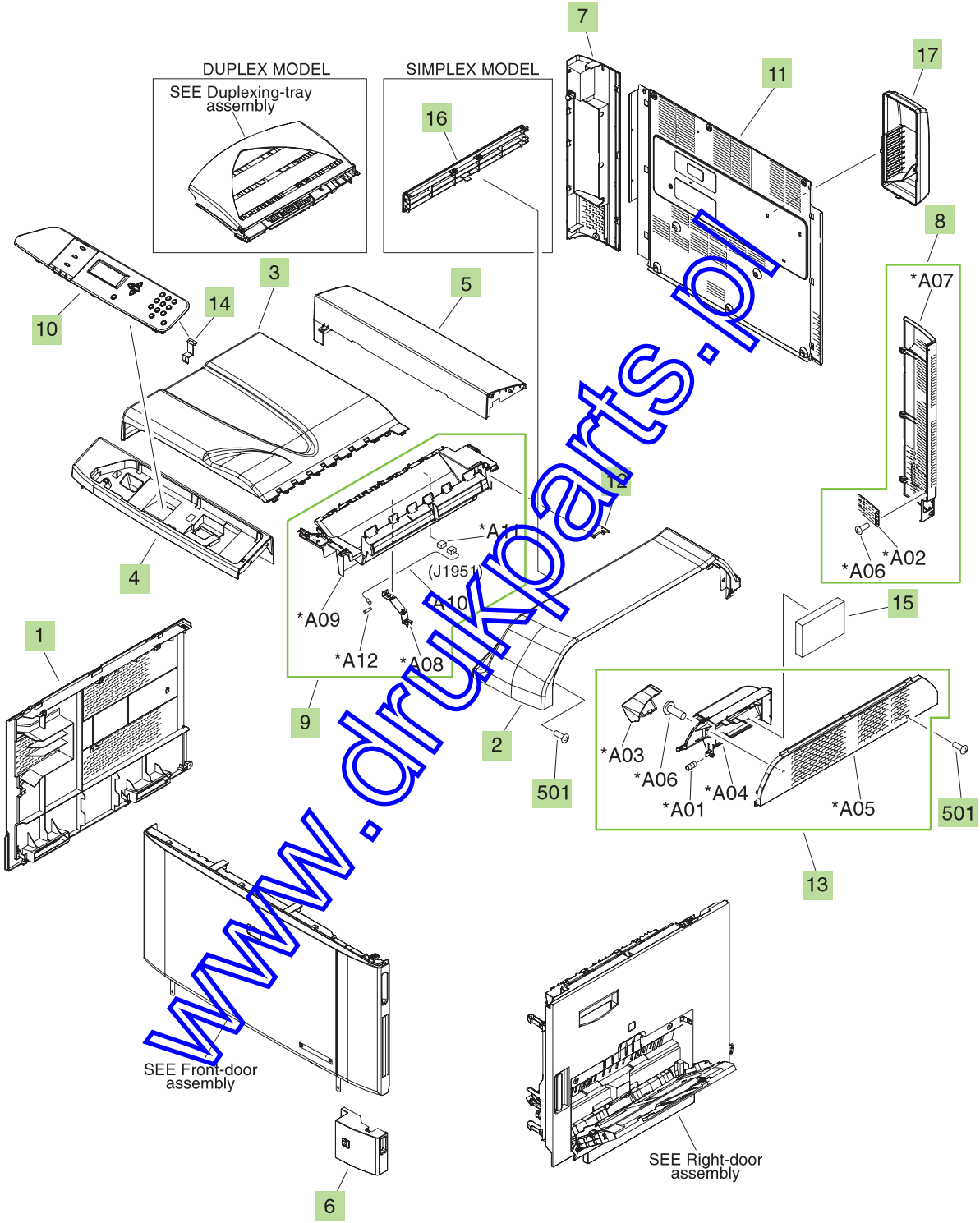

www.drukparts.pl

Table 9-1 Printer external covers and panels

Ref	Description	Part number	Qty
1	Cover, left	RC1-9336-000CN	1
2	Cover, right-upper	RC1-9339-000CN	1
3	Cover, face-down	Q3931-67905	1
4	Cover, panel	RC1-9341-000CN	1
5	Cover, rear-upper	RC1-9342-000CN	1
6	Right-lower cover assembly	RL1-1280-000CN	1
7	Cover, rear-left	RC1-9344-000CN	1
8	Rear-right cover assembly	RM1-4415-000CN	1
9	Face-down end-tray assembly	RM1-3340-000CN	1
10	Control-panel unit	RM1-4516-000CN	1
11	Cover, rear	RC1-1210-000CN	1
12	Cover, face-down drive	RC1-9360-000CN	1
13	Switchback-cover assembly	RM1-3360-000CN	1
14	Plate, control-panel grounding	RC1-9238-000CN	1
15	Filter unit, air	RC1-9313-000CN	1
16	Cover, blanking (simplex)	RC1-9362-000CN	1
17	Fixing-fan cover assembly	RM1-5950-000CN	1
501	Screw, tapping, truss-head, M4X10	XB4-7401-005CN	8 (simplex)
501	Screw, tapping, truss-head, M4X10	XB4-7401-005CN	12 (duplex)

NOTE: Only highlighted parts are orderable.

www.drukparts.pl

Figure 9-4 Printer front-door assembly

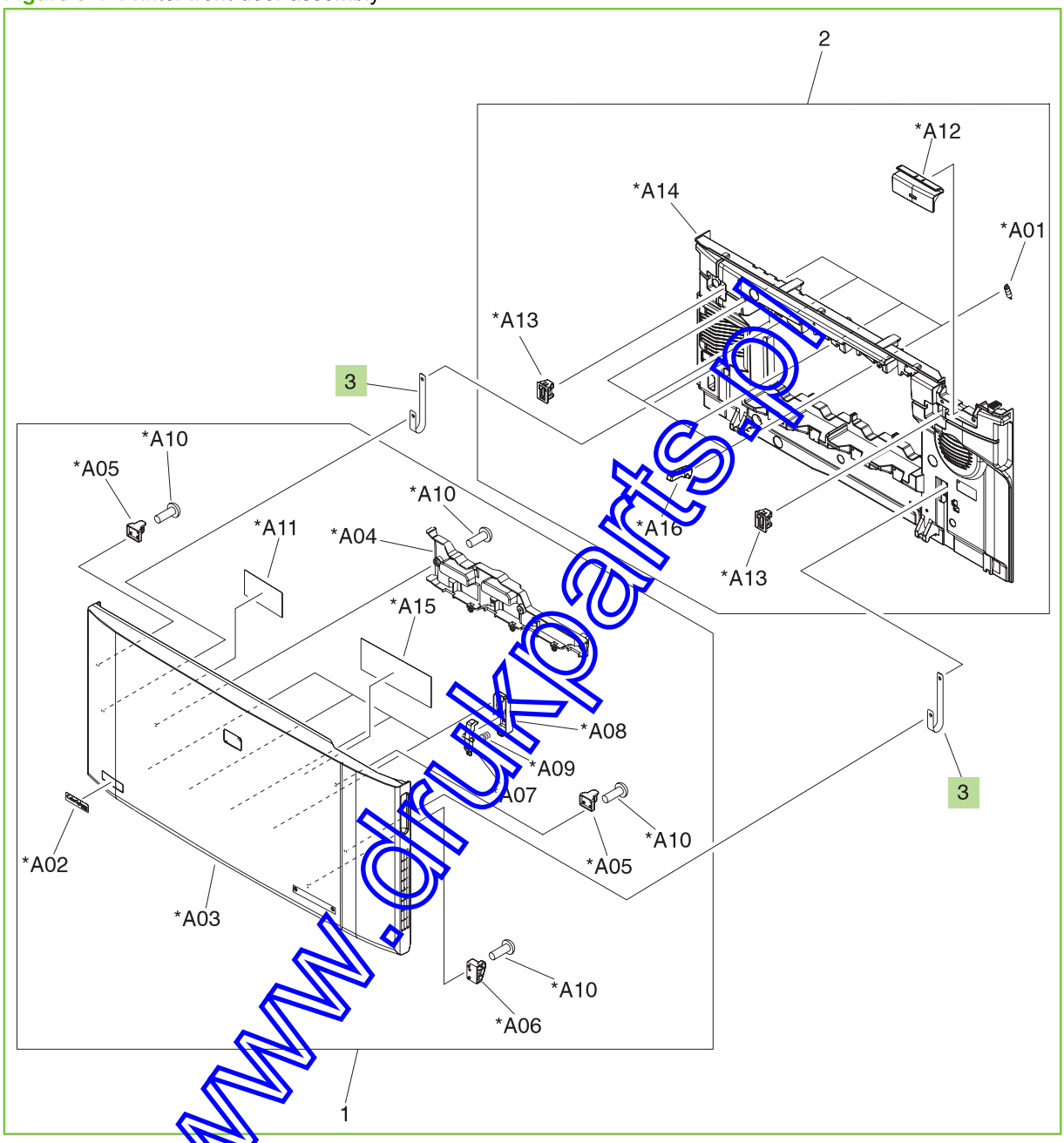

www.drukparts.pl

Table 9-2 Printer front-door assembly

Ref	Description	Part number	Qty
All	Front-door assembly	RM1-3356-000CN	1
3	Band, door	RC1-9043-000CN	2

NOTE: Only highlighted parts are orderable.

www.drukparts.pl

Figure 9-5 Printer right-door assembly

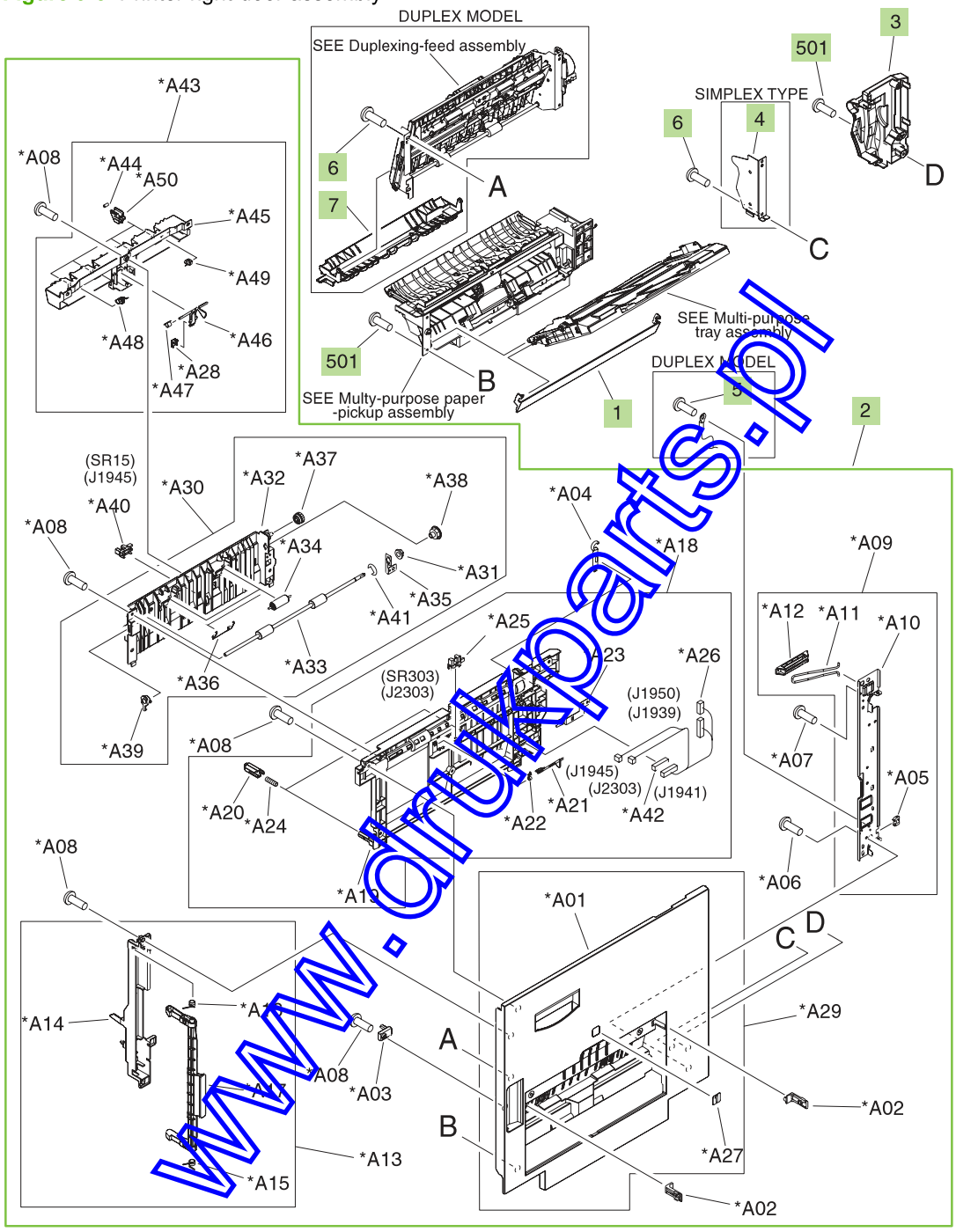

www.drkparts.pl

Table 9-3 Printer right-door assembly

Ref	Description	Part number	Qty
1	Cover, multi-purpose blanking	RC1-8527-000CN	1
2	Right-door sub-assembly	RM1-3333-000CN	1
3	Cover, motor	RC1-9511-000CN	1
4	Support, door-cover (simplex)	RC1-9014-000CN	1
5	Screw, RS, M3X6 (duplex)	XA9-1495-000CN	1
6	Screw, with washer, M4X12	XA9-1422-000CN	2 (simplex)
6	Screw, with washer, M4X12	XA9-1422-000CN	4 (duplex)
7	Guide, duplexing-feed, upper (duplex)	RL1-1335-000CN	1
501	Screw, tapping, truss-head, M4X10	XB4-7401-005CN	7

NOTE: Only highlighted parts are orderable.

www.drukparts.pl

Figure 9-6 Printer internal components (1 of 7)

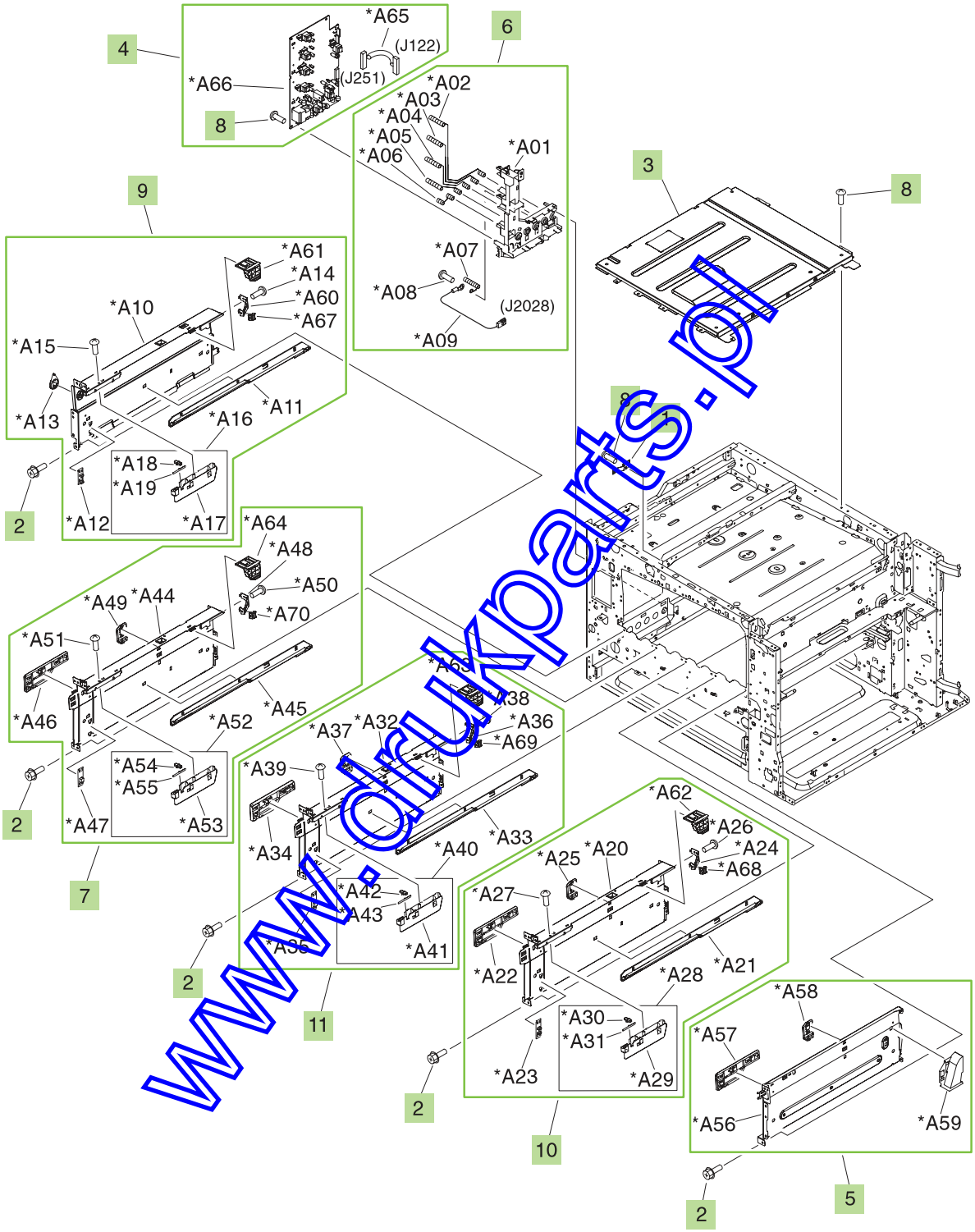

www.drukparts.pl

Table 9-4 Printer internal components (1 of 7)

Ref	Description	Part number	Qty
1	Spring, leaf	RC1-9233-000CN	1
2	Screw, RS, M3x8	XA9-1504-000CN	5
3	Top-cover assembly	RL1-1284-000CN	1
4	High-voltage transfer B PCA assembly	RM1-5475-000CN	1
5	Right-side wall assembly	RM1-3239-000CN	1
6	Transfer contact-holder assembly	RM1-3230-000CN	1
7	Partition-plate assembly, cyan	RM1-3238-000CN	1
8	Screw, RS, M3x6	XA9-1495-000CN	10
9	Left-side wall assembly	RM1-3233-000CN	1
10	Partition-plate assembly, yellow	RM1-3235-000CN	1
11	Partition-plate assembly, magenta	RM1-3237-000CN	1

NOTE: Only highlighted parts are orderable.

www.drukparts.pl

Figure 9-7 Printer internal components (2 of 7)

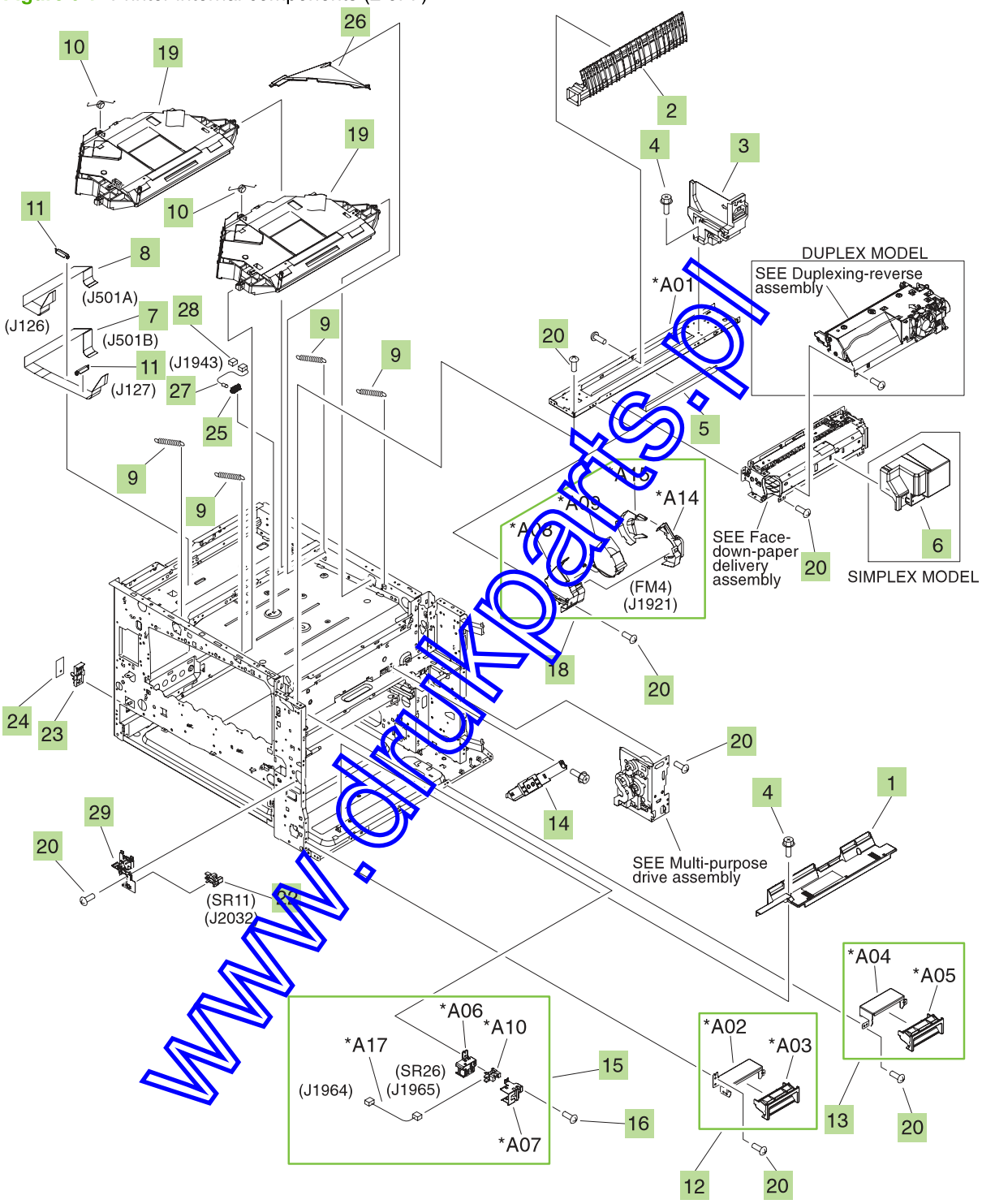

www.drukparts.pl

Table 9-5 Printer internal components (2 of 7)

Ref	Description	Part number	Qty
1	Guide, multi-purpose, right	RL1-1283-000CN	1
2	Guide, face-down inner	RC1-8959-000CN	1
3	Rail, reverse, rear	RC1-9206-000CN	1
4	Screw, RS, M3x8	XA9-1504-000CN	10
5	Sheet, fixing-crossmember	RC1-9232-000CN	1
6	Block, reinforcement (simplex)	RC1-9354-000CN	1
7	Cable, laser flexible flat	RK2-1354-000CN	1
8	Cable, laser flexible flat	RK2-1355-000CN	1
9	Spring, tension	RU5-2822-000CN	4
10	Spring, torsion	RU5-2825-000CN	2
11	Clamp, FFC	WT2-5012-000CN	2
12	Grip-support front assembly	RM1-3225-000CN	1
13	Grip-support rear assembly	RM1-3226-000CN	1
14	Thermopile case assembly	RM1-3232-000CN	1
15	Photosensor assembly	RM1-3250-000CN	1
16	Screw, RS, M3x8	XA9-1449-000CN	2
18	Fan assembly	RM1-3364-000CN	1
19	Scanner assembly kit (1 scanner assembly per kit) with service document	Q3931-67907	2
20	Screw, RS, M3x6	XA9-1495-000CN	20
22	Photo interrupter, TLP1243	WG8-5696-000CN	1
23	Holder, environment-sensor	RC1-9324-000CN	1
24	Sensor unit, humidity	RK2-2376-000CN	1
25	Holder, scanner-thermistor	RC1-9260-000CN	1
26	Duct, scanner	RC1-9334-000CN	1
27	Thermistor unit	RK2-1363-000CN	1
28	Connector, snap-right	VS1-7177-002CN	1
29	Interlock-switch assembly	RM1-3589-000CN	1

NOTE: Only highlighted parts are orderable.

www.drukparts.pl

Figure 9-8 Printer internal components (3 of 7)

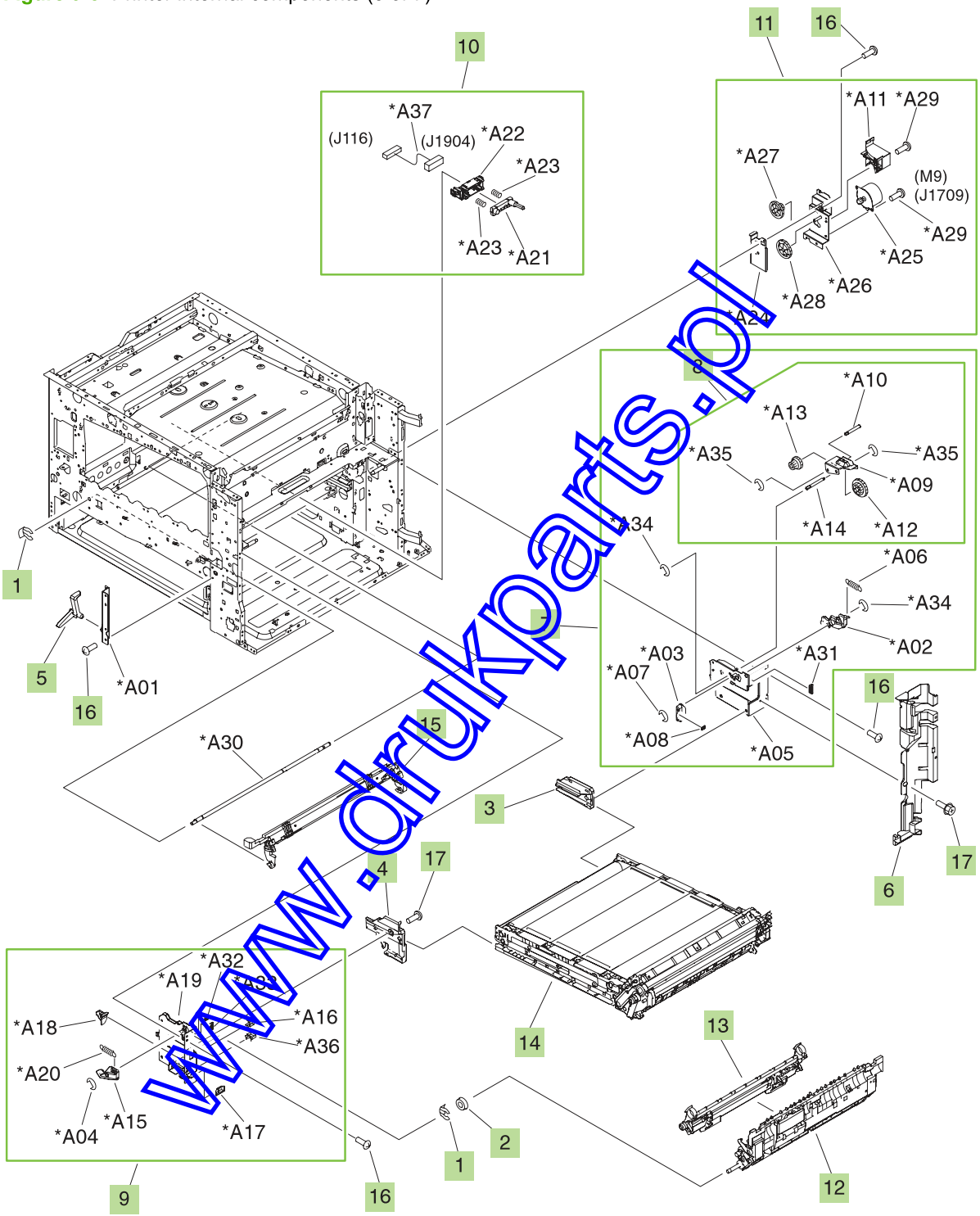

www.drukparts.pl

Table 9-6 Printer internal components (3 of 7)

Ref	Description	Part number	Qty
1	Retainer	RC1-8511-000CN	2
2	Bushing	RC1-8734-000CN	1
3	Guide, intermediate transfer belt (ITB)-entrance, rear	RC1-9186-000CN	1
4	Guide, intermediate transfer belt (ITB)-entrance, front	RC1-9185-000CN	1
5	Arm, 1st-estrangement	RC1-9189-000CN	1
6	Cover, internal, right	RC1-9348-000CN	1
7	Intermediate transfer belt (ITB) lock-support rear assembly	RM1-3215-000CN	1
9	Intermediate transfer belt (ITB) lock-support front assembly	RM1-3228-000CN	1
10	Intermediate transfer belt (ITB)-drawer assembly	RM1-3240-000CN	1
11	Intermediate transfer belt (ITB) estrangement-drive assembly	RM1-3280-000CN	1
12	Registration 2nd-transfer assembly kit with service document	Q3961-67909	1
13	2nd-transfer-roller assembly	RM1-3319-000CN	1
14	Intermediate transfer belt (ITB) assembly	RM1-3307-000CN	1
15	Color-plane-registration sensor assembly	RM1-3258-000CN	1
16	Screw, RS, M3x6	XA9-1495-000CN	10
17	Screw, RS, M3x8	XA9-1504-000CN	1

NOTE: Only highlighted parts are orderable.

www.drukparts.pl

Figure 9-9 Printer internal components (4 of 7)

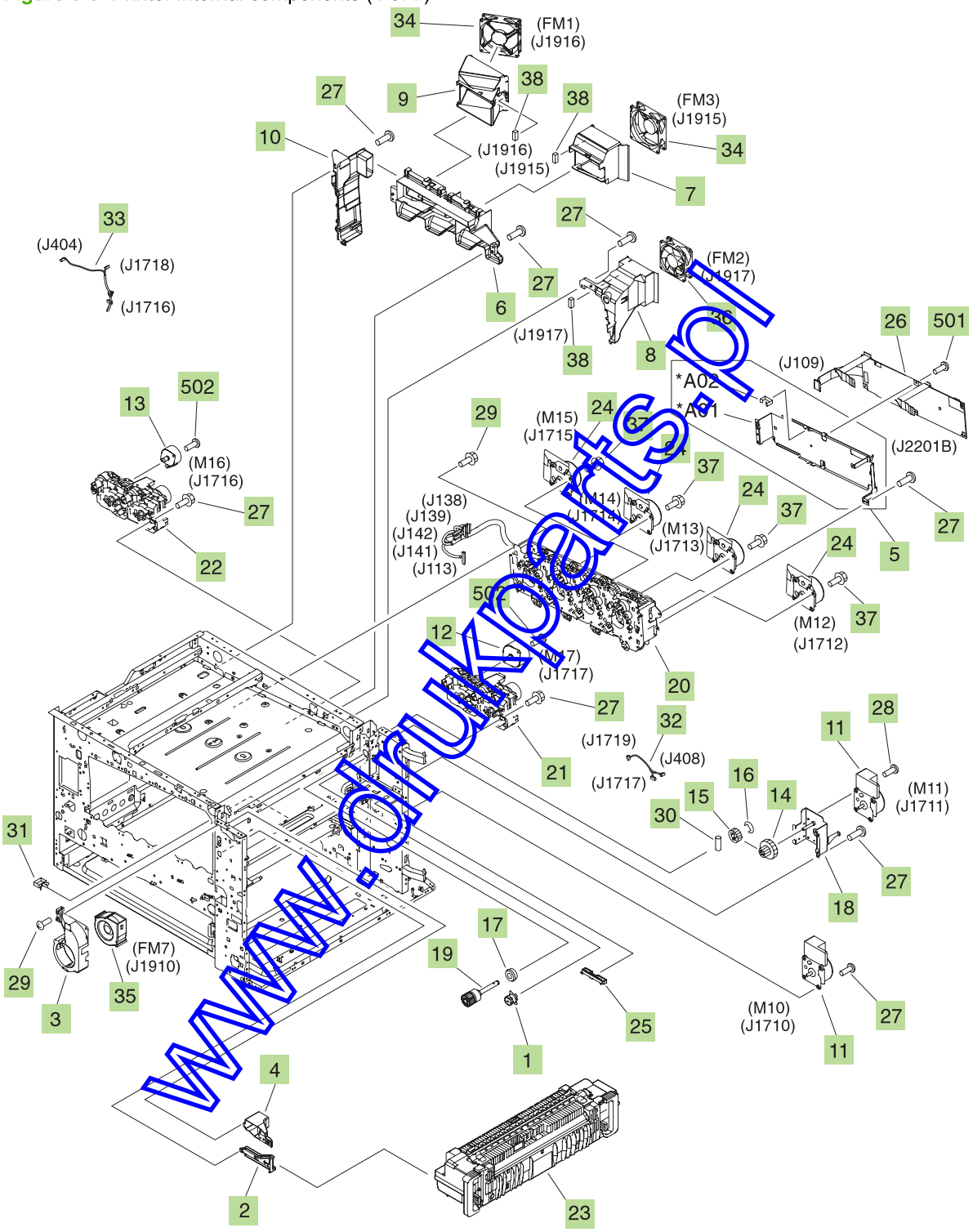

www.drukparts.pl

Table 9-7 Printer internal components (4 of 7)

Ref	Description	Part number	Qty
1	Damper, gear	RC1-8925-000CN	1
2	Rail, fixing, front	RC1-8931-000CN	1
3	Duct, air	RC1-8961-000CN	1
4	Duct, face-down joint	RC1-8964-000CN	1
5	Tag PCA-holder assembly	RM1-4402-000CN	1
6	Duct, cartridge	RC1-9276-000CN	1
7	Holder, cartridge-fan	RC1-9277-000CN	1
8	Holder, fixing-fan	RC1-9278-000CN	1
9	Holder, scanner-fan	RC1-9279-000CN	1
10	Duct, scanner-fan	RC1-9309-000CN	1
11	DC motor assembly	RM1-4019-000CN	2
12	Motor, stepping, DC	RK2-1366-000CN	1
13	Motor, stepping, DC	RK2-1370-000CN	1
14	Gear, 83T/25T	RU5-0790-000CN	1
15	Gear, 34T	RU5-0791-000CN	1
16	Ring, E	XD9-0234-000CN	1
17	Bearing, ball	XG9-0586-000CN	1
18	Plate, fixing-motor	RL1-1216-000CN	1
19	Fixing one-way gear assembly	RM1-3247-000CN	1
20	Main drive-unit kit with service document	Q3931-67911	1
21	Toner cartridge drive assembly kit with service document	Q3931-67912	1
22	Toner cartridge drive assembly kit with service document	Q3931-67913	1
23	Fixing assembly kit, 110-127V	Q3931-67914	1
24	Fixing assembly kit, 220-240V	Q3931-67915	1
24	Drum-motor assembly	RM1-3286-000CN	4
25	Rail, fixing, rear	RC1-8939-000CN	1
26	Memory-tag PCA assembly	RM1-3585-000CN	1
27, 28	Screw, FS, M3x6	XA9-1495-000CN	14
29	Screw, FS, M3x8	XA9-1504-000CN	10
30	Pin, dowel	XD9-0240-000CN	1
31	Saddle, wire	WT2-5694-000CN	17
32	Toner-motor cable	RM1-3383-000CN	1
33	Toner-motor cable	RM1-3385-000CN	1
34	Fan	RK2-1377-000CN	2

www.drukparts.pl

Table 9-7 Printer internal components (4 of 7) (continued)

Ref	Description	Part number	Qty
35	Fan	RK2-1382-000CN	1
36	Fan	RK2-1378-000CN	1
37	Screw, TP, M3x6	XA9-1159-000CN	16
38	Connector, snap-tight	VS1-7177-003CN	3
501	Screw, with washer, M3x6	XB2-8300-607CN	5
502	Screw, machined, truss-head, M3x4	XB1-2300-407CN	4

NOTE: Only highlighted parts are orderable.

www.drukparts.pl

www.drukparts.pl

Figure 9-10 Printer internal components (5 of 7)

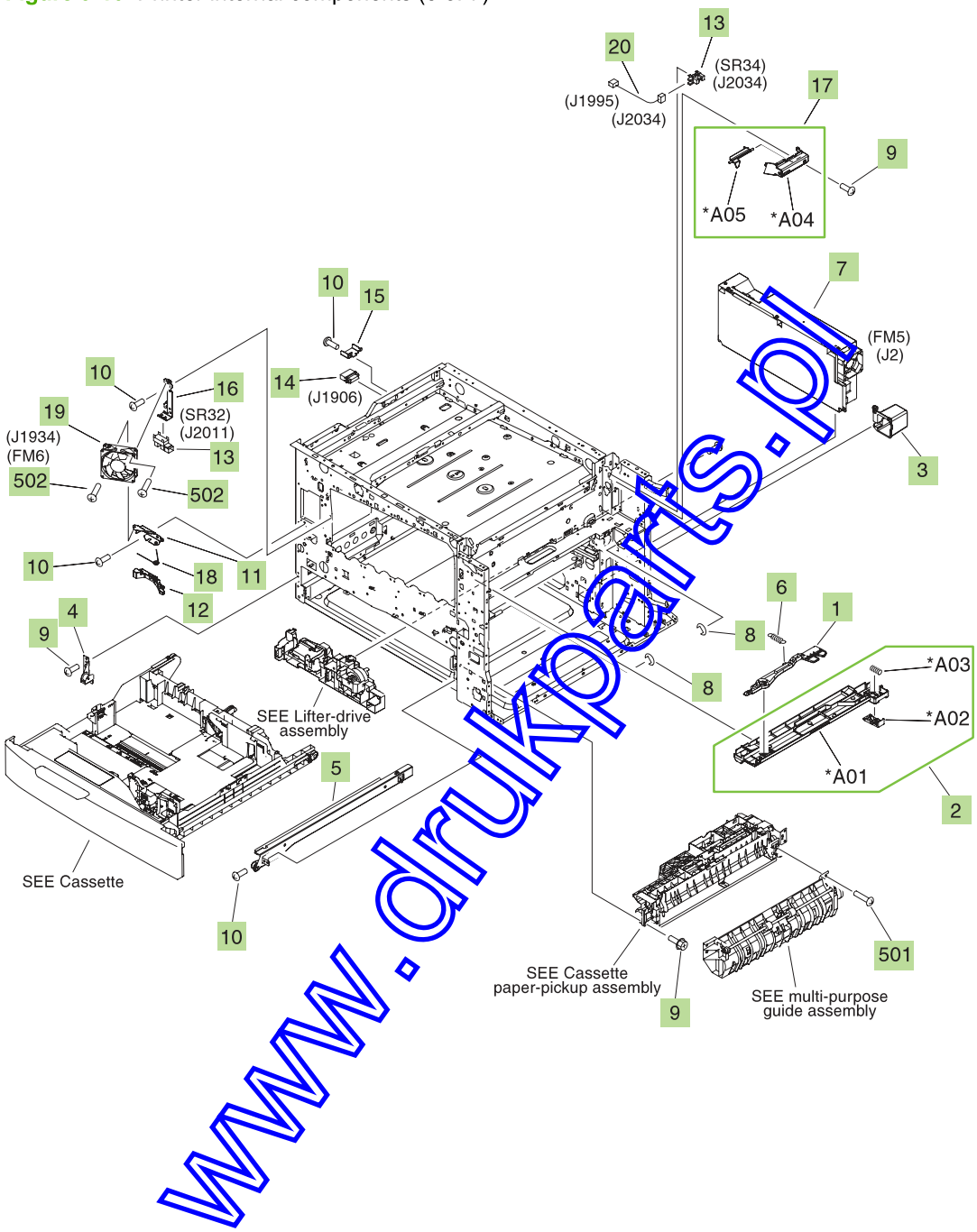

www.drukparts.pl

Table 9-8 Printer internal components (5 of 7)

Ref	Description	Part number	Qty
1	Lever, paper-sensing	RC1-8928-000CN	1
2	Intermediate transfer belt (ITB) duct assembly	RM1-4401-000CN	1
3	Cover, cassette back-end	RC1-9201-000CN	1
4	Rail, left, top	RL1-1213-000CN	1
5	Rail, cassette, right	RL1-1215-000CN	1
6	Spring, tension	RU5-2796-000CN	1
7	Low-voltage power-supply assembly	RM1-3594-000CN	1
8	Ring, E	XD9-0234-000CN	2
9	Screw, RS, M3x8	XA9-1504-000CN	10
10	Screw, RS, M3x6	XA9-1495-000CN	10
11	Plate, fan-fixing, front	RC1-9190-000CN	1
12	Lever, door-interlock shutter	RC1-9220-000CN	1
13	Photo interrupter, TLP1243	WG8-5696-000CN	2
14	Connector, drawer	VS1-7258-000CN	1
15	Plate, drawer-guard	RC1-9235-000CN	1
16	Plate, sensor, front	RC1-9246-000CN	1
17	Guide-sensor assembly	RM1-4400-000CN	1
18	Spring, torsion	RC1-9244-000CN	1
19	Fan	RK2-1378-000CN	1
20	Cable, fixing open-sensor	RM1-5029-000CN	1
501	Screw, tapping, truss-head, M4x16	XB4-7401-005CN	4
502	Screw, TP, M3x30	XB6-7303-005CN	2

NOTE: Only highlighted parts are orderable.

www.drukparts.pl

Figure 9-11 Printer internal components (6 of 7)

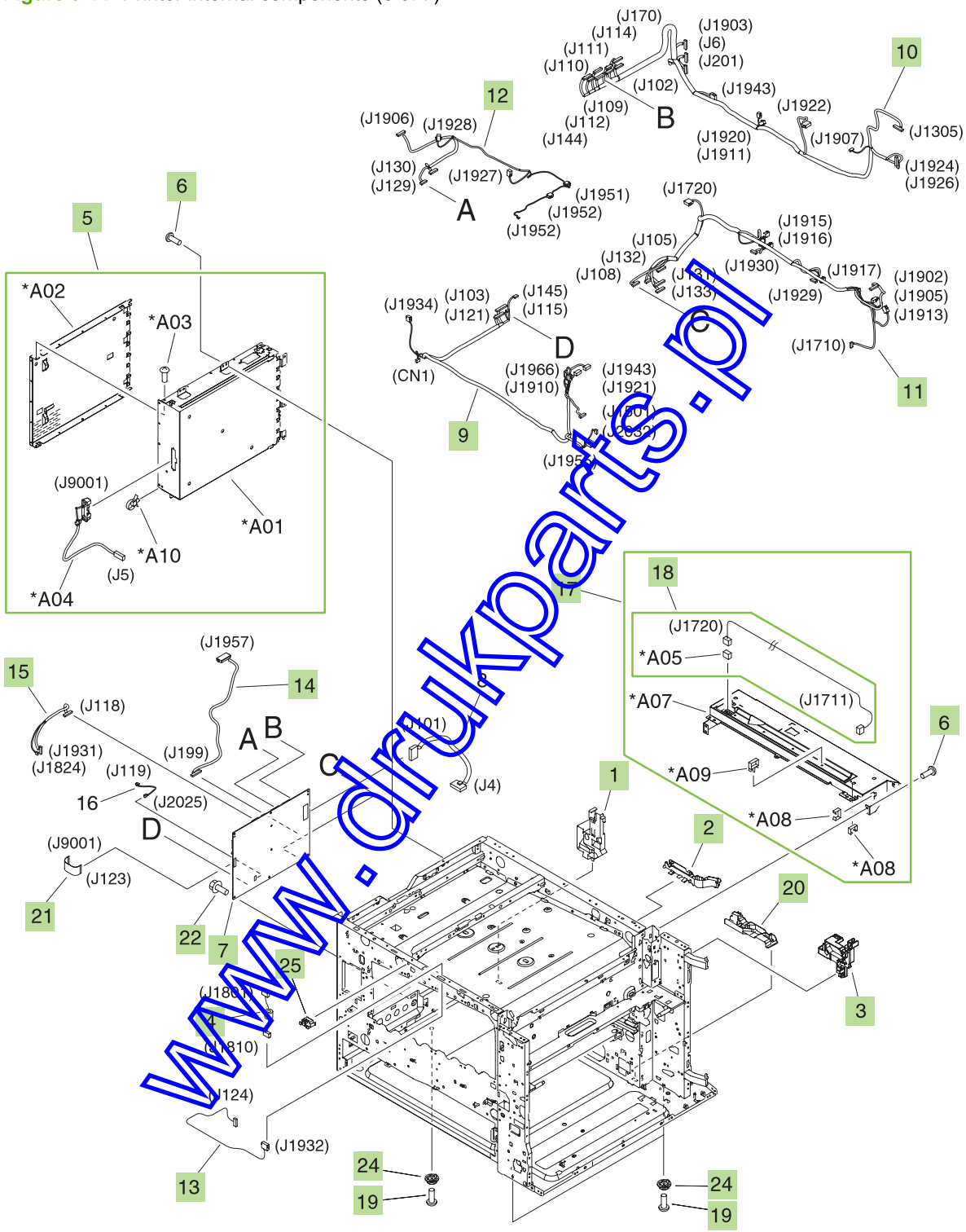

www.drukparts.pl

Table 9-9 Printer internal components (6 of 7)

Ref	Description	Part number	Qty
1	Guide, cable, C	RC1-9308-000CN	1
2	Guide, cable, D	RC1-9312-000CN	1
3	Guide, cable, E	RC1-9318-000CN	1
4	Panel cable	RM1-3389-000CN	1
5	Formatter-case assembly	RM1-3253-000CN	1
6	Screw, RS, M3x6	XA9-1495-000CN	20
7	DC-controller kit with service document	Q3931-67916	1
8	DC-controller power cable	RM1-3610-000CN	1
9	Front cable	RM1-3617-000CN	1
10	Rear-lower cable	RM1-3618-000CN	1
11	Rear-upper cable	RM1-3619-000CN	1
12	Scanner-joint cable	RM1-3620-000CN	1
13	Panel-joint cable	RM1-3622-000CN	1
14	Interface-joint cable	RM1-3623-000CN	1
15	Color-plane-registration joint cable	RM1-3624-000CN	1
17	Rear-cover-mount plate assembly	RM1-3354-000CN	1
18	Fixing-motor cable	RM1-3217-000CN	1
19	Screw, TP, M4x8	XA9-1300-000CN	3
20	Guide, cable, B	RC1-9307-000CN	1
21	Cable, flexible flat	RK2-1356-000CN	1
22	Screw, RS, M3x8	XA9-1449-000CN	8
24	Foot, rubber	RC1-9208-000CN	3
25	Guide, cable	RC1-9329-000CN	1

NOTE: Only highlighted parts are orderable.

www.drukparts.pl

Figure 9-12 Printer internal components (7 of 7)

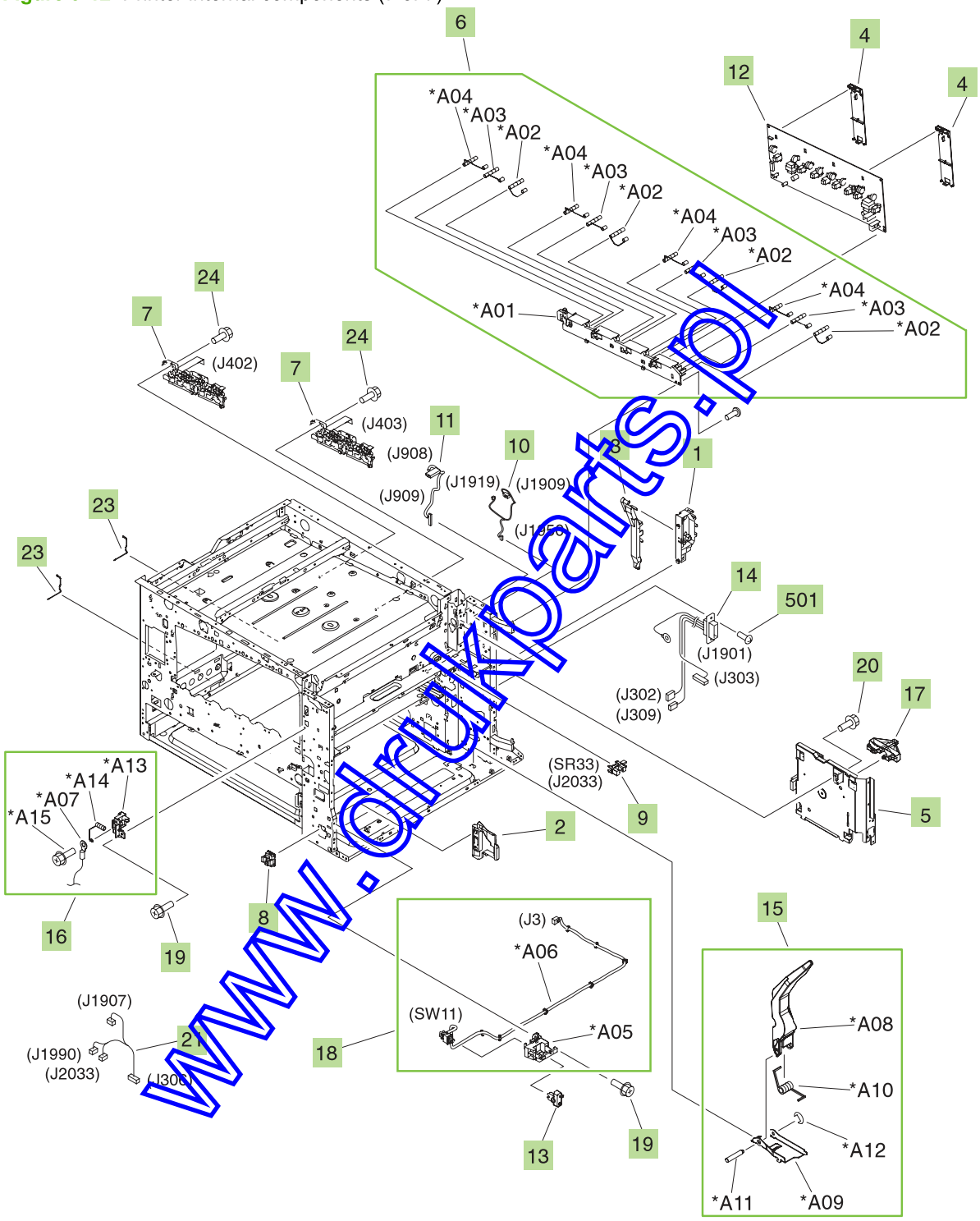

www.drukparts.pl

Table 9-10 Printer internal components (7 of 7)

Ref	Description	Part number	Qty
1	Guide, cable, A	RC1-9306-000CN	1
2	Cover, main-switch	RC1-9211-000CN	1
3	Guide, cable, F	RC1-9323-000CN	1
4	Plate, HVT-A (high-voltage transmission) guard	RC1-9326-000CN	2
5	Fixing power-supply assembly	RM1-3218-000CN	1
6	Cartridge contact-holder assembly	RM1-3254-000CN	1
7	Cartridge-interface assembly kit with service document	Q3931-67917	1
8	Holder, high-voltage-connector	RC1-9328-000CN	1
9	Photo interrupter, TLP1243	WG8-5696-000CN	1
10	Face-down unit-1 cable	RM1-3390-000CN	1
11	Face-down unit-2 cable	RM1-3391-000CN	1
12	High-voltage-transfer A PCA assembly	RM1-3582-000CN	1
13	Button, main-switch	RC1-9300-000CN	1
14	Fixing-joint cable	RM1-3612-000CN	1
15	T2 guide-arm assembly	RM1-4411-000CN	1
16	Fixing-bias cable assembly	RM1-4409-000CN	1
17	Guide, fixing-cable	RC1-9332-000CN	1
18	Main switch-holder assembly	RM1-3252-000CN	1
19	Screw, RS, M3x8	XA9-1504-000CN	47
20	Screw, RS, M3x6	XA9-1495-000CN	54
21	Cable TP/T2 open-sensor	RM1-5030-000CN	1
23	Clamp, formatter cable	RC1-9261-000CN	2
24	Screw, RS, M13x12	XA9-1801-000CN	6
501	Screw, machined, truss head, M4x8	XB1-2400-805CN	2

NOTE: Only highlighted parts are orderable.

www.drukparts.pl

Figure 9-13 Printer multi-purpose-drive assembly

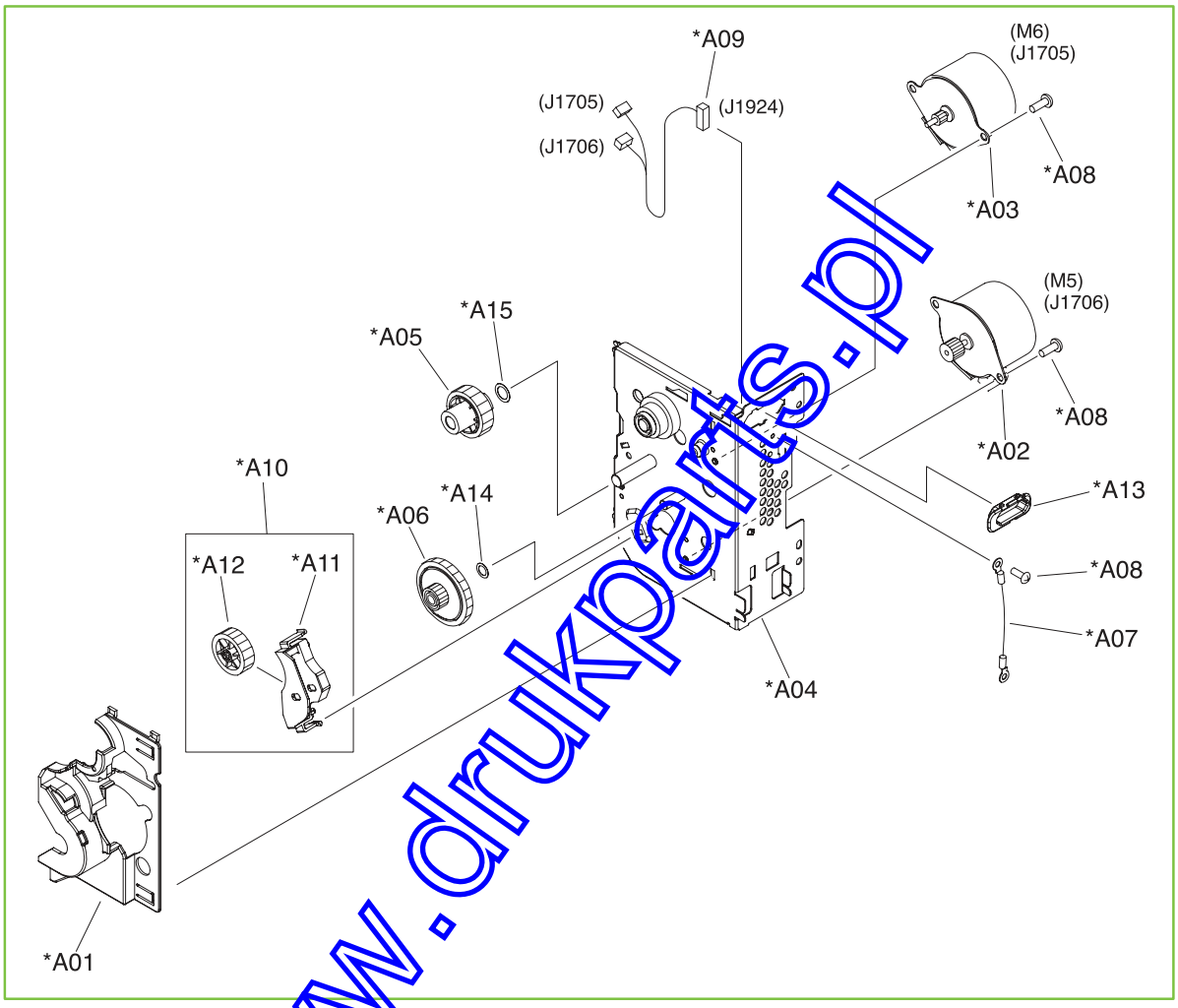

www.drukparts.pl

Table 9-11 Printer multi-purpose-drive assembly

Ref	Description	Part number	Qty
All	Multi-purpose-drive assembly	RM1-3366-000CN	1

NOTE: Only highlighted parts are orderable.

www.drukparts.pl

Figure 9-14 Printer lifter-drive assembly

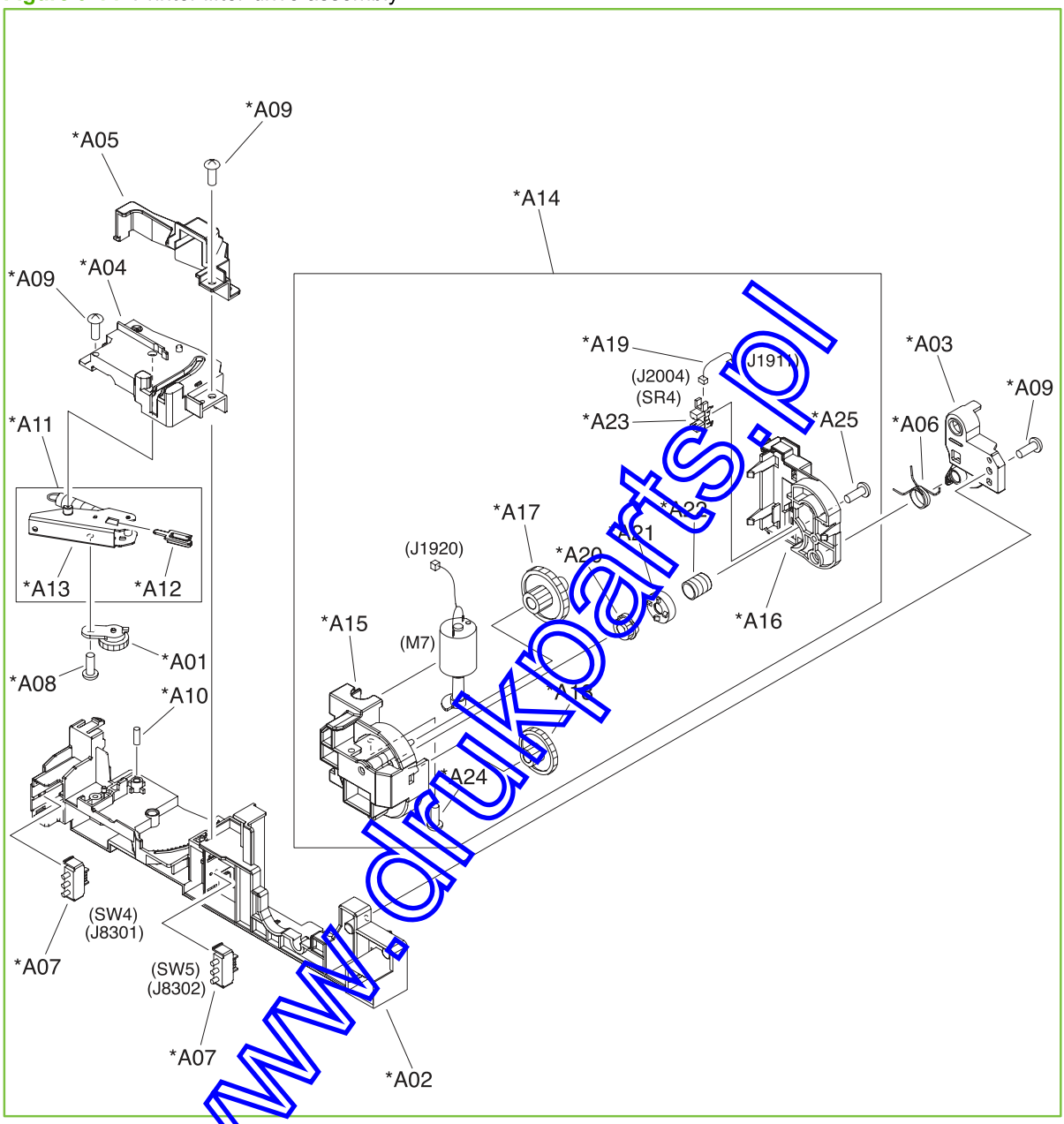

www.drukparts.pl

Table 9-12 Printer lifter-drive assembly

Ref	Description	Part number	Qty
All	Lifter-drive-assembly kit	RM1-3222-020CN	1

NOTE: Only highlighted parts are orderable.

www.drukparts.pl

Figure 9-15 Printer cassette

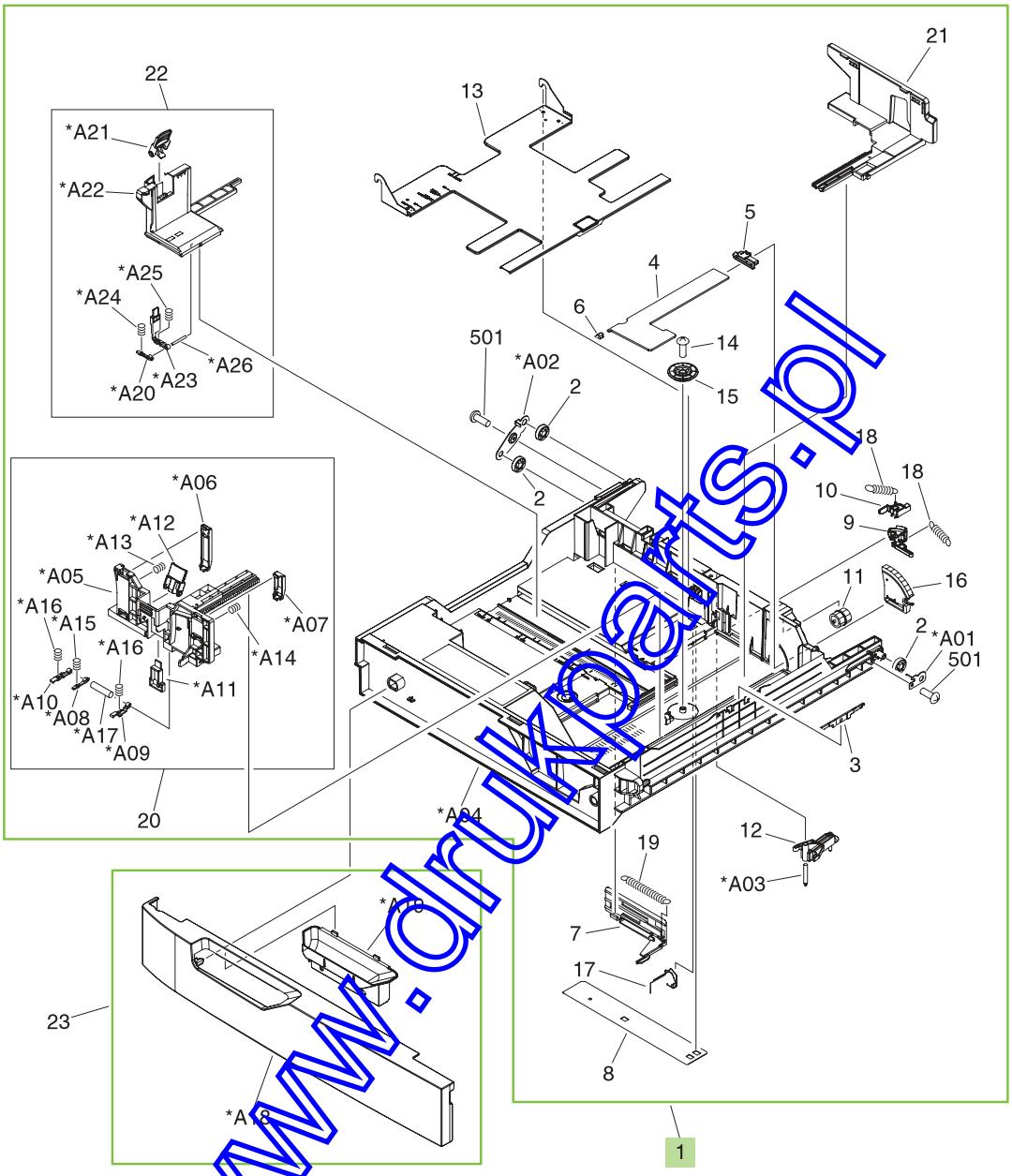

www.drukparts.pl

Table 9-13 Printer cassette

Ref	Description	Part number	Qty
1, 23	Cassette-assembly kit	Q3931-67918	1

NOTE: Only highlighted parts are orderable.

www.drukparts.pl

Figure 9-16 Printer cassette paper-pickup assembly

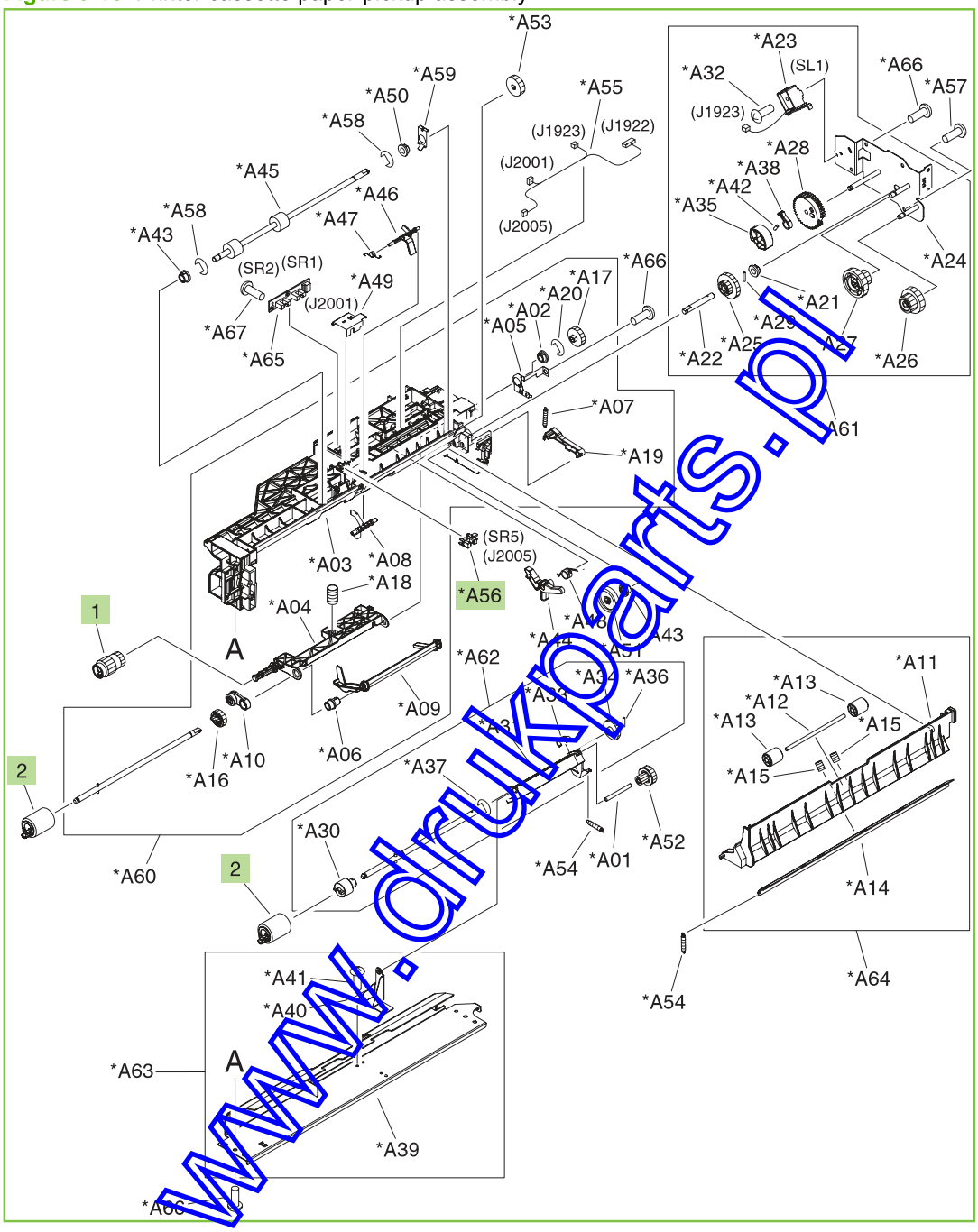

www.drukparts.pl

Table 9-14 Printer cassette paper-pickup assembly

Ref	Description	Part number	Qty
All	Cassette paper-pickup assembly (includes 1 pick and 2 feed rollers)	RM1-3206-000CN	1
1, 2	Tray 2 pickup, feed-roller kit	Q3931-67919	1

NOTE: Only highlighted parts are orderable.

www.drukparts.pl

Figure 9-17 Printer multi-purpose paper-pickup assembly

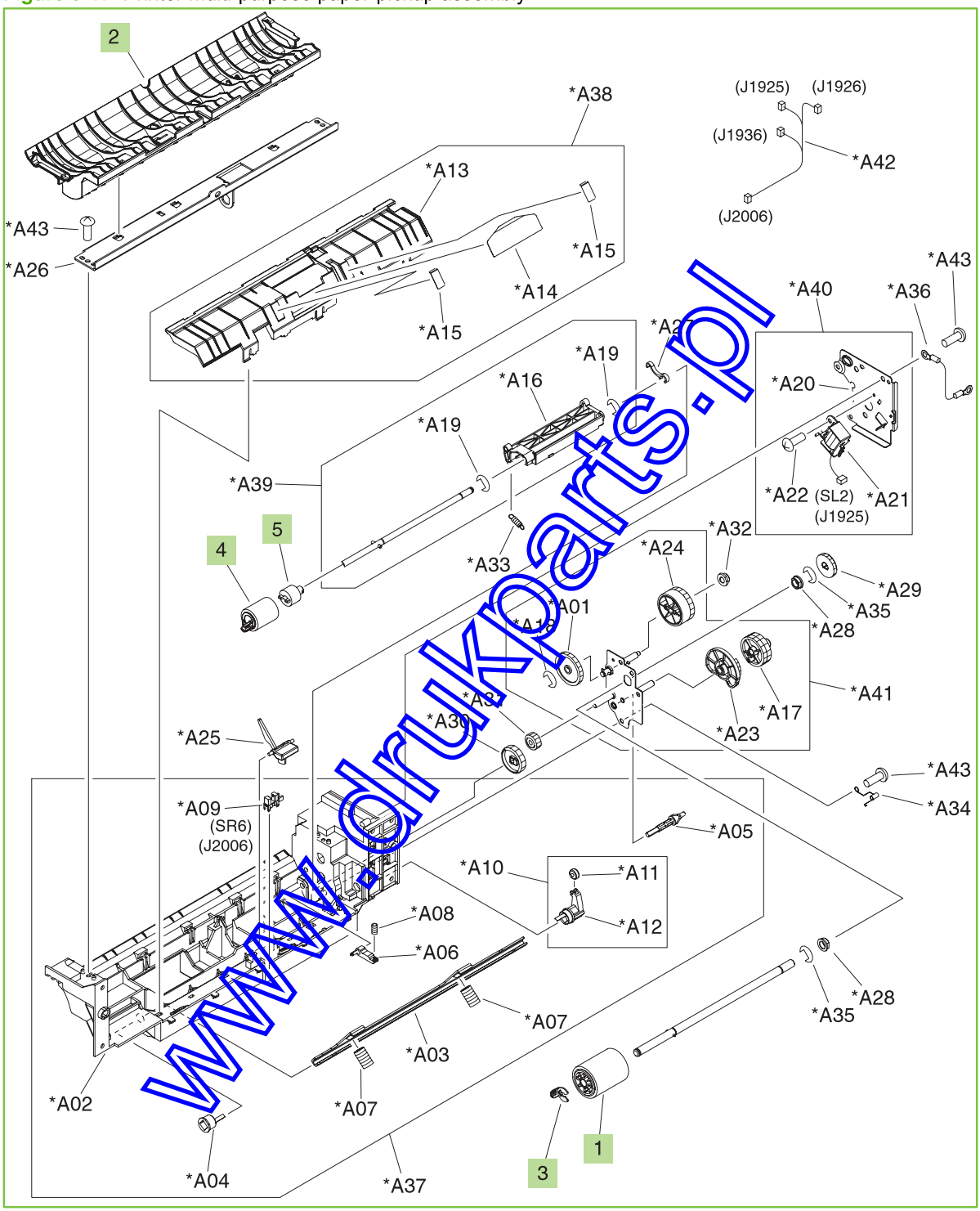

www.drukparts.pl

Table 9-15 Printer multi-purpose paper-pickup assembly

Ref	Description	Part number	Qty
All	Multi-purpose paper-pickup assembly	RM1-3345-000CN	1
1, 4	Tray 1 pickup, retard-roller kit	Q3931-67920	1
2	Guide, multi-purpose, upper	RC1-8526-000CN	1
3	Retainer	RC1-8511-000CN	1
5	Limiter, torque	RC1-8519-000CN	1

NOTE: Only highlighted parts are orderable.

www.drukparts.pl

Figure 9-18 Printer multi-purpose-tray assembly

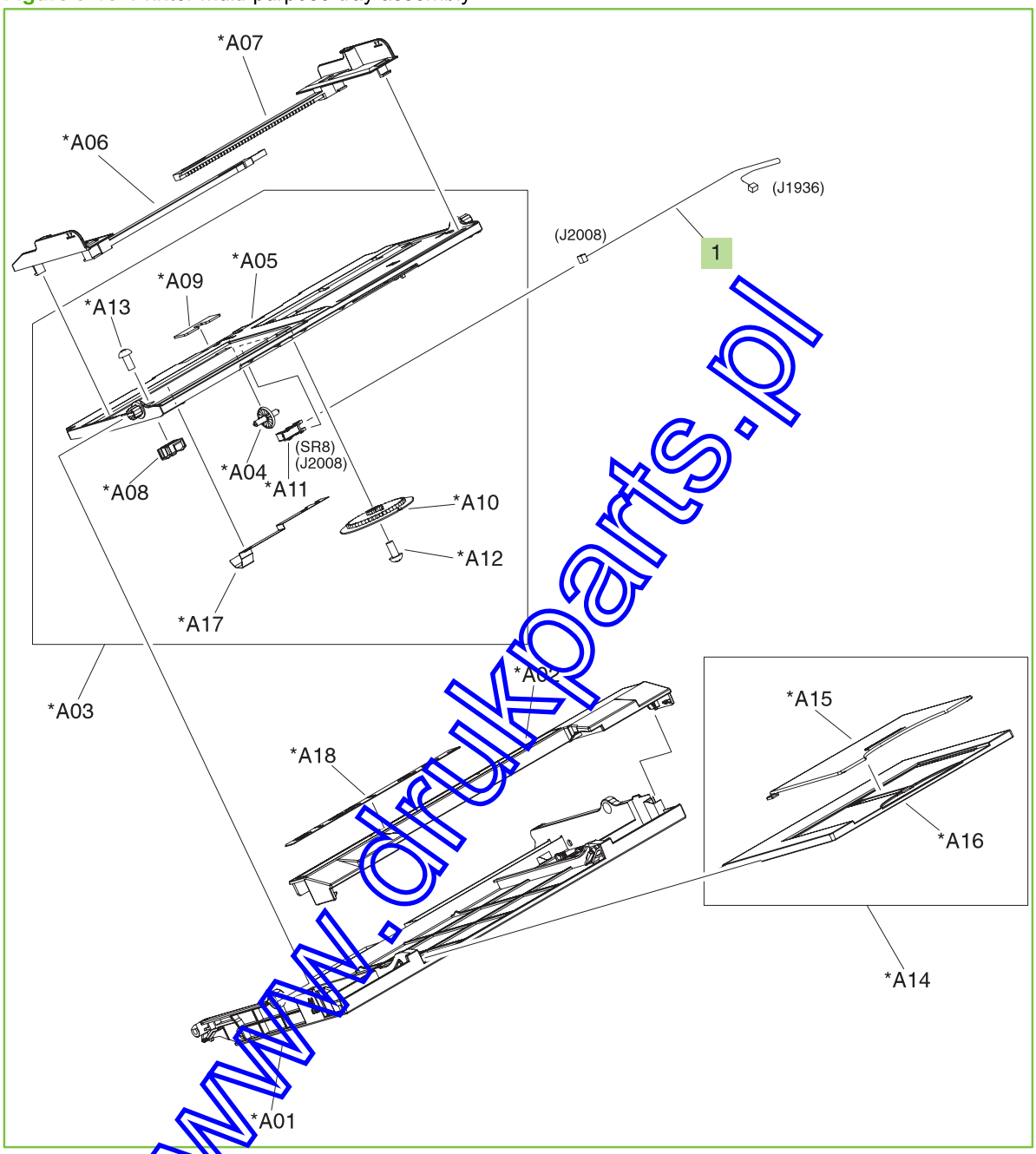

www.drukparts.pl

Table 9-16 Printer multi-purpose-tray assembly

Ref	Description	Part number	Qty
All	Multi-purpose-tray assembly	RM1-3341-000CN	1
1	Multi-tray cable	RM1-3630-000CN	1

NOTE: Only highlighted parts are orderable.

www.drukparts.pl

Figure 9-19 Printer multi-purpose-guide assembly

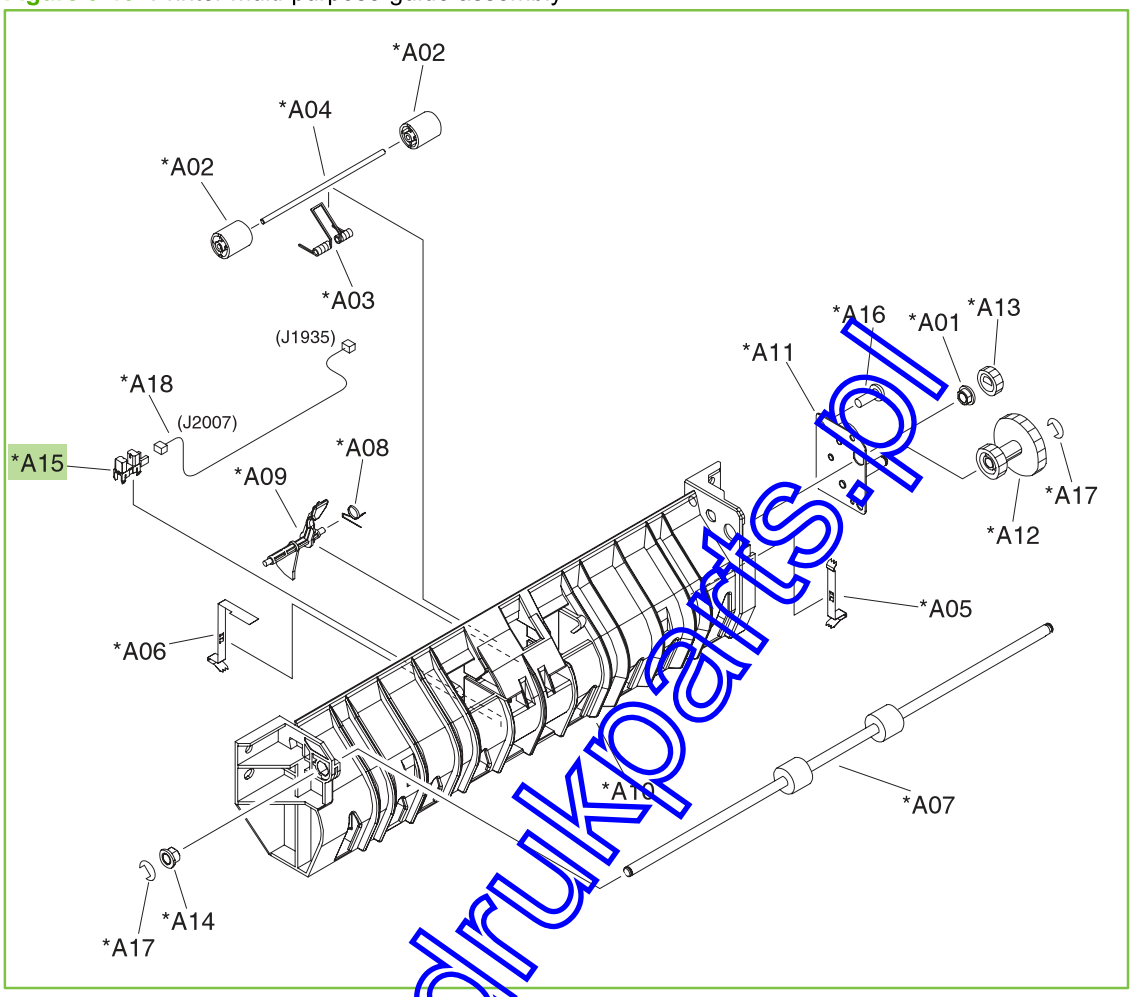

www.drukparts.pl

Table 9-17 Printer multi-purpose-guide assembly

Ref	Description	Part number	Qty
All	Multi-purpose-guide assembly	RM1-3291-000CN	1
A15	Photo interrupter, TLP1243	WG8-5696-000CN	1

NOTE: Only highlighted parts are orderable.

www.drukparts.pl

Figure 9-20 Printer face-down paper-delivery assembly

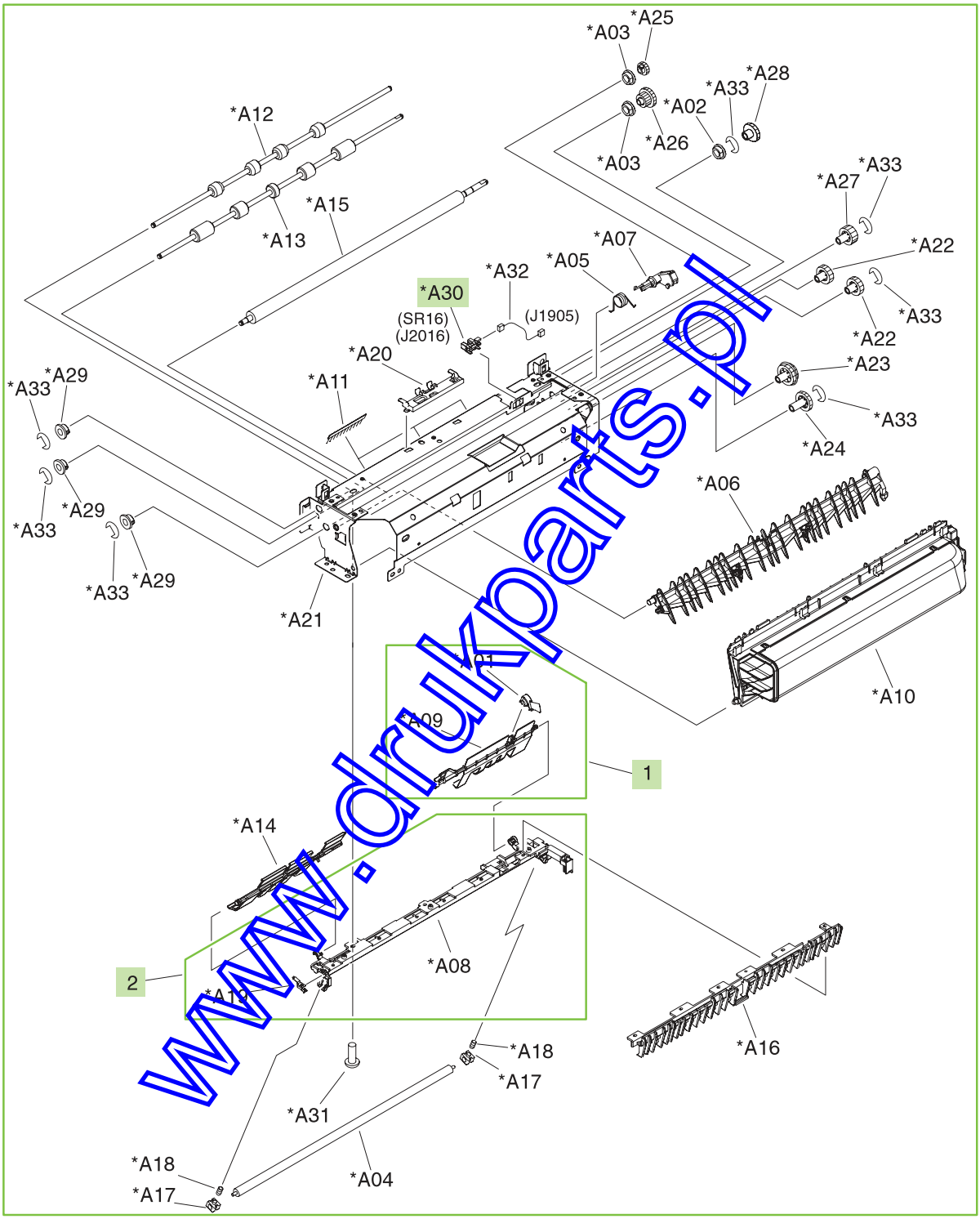

www.drukparts.pl

Table 9-18 Printer face-down paper-delivery assembly

Ref	Description	Part number	Qty
All	Face-down paper-delivery assembly	RM1-3293-000CN	1
1	Face-down full-flag assembly	RM1-4391-000CN	1
2	Paper-delivery-guide assembly	RM1-4407-000CN	1
A30	Photo interrupter, TLP1243	WG8-5696-000CN	1

NOTE: Only highlighted parts are orderable.

www.drukparts.pl

Figure 9-21 Printer duplexing-reverse assembly (duplex model)

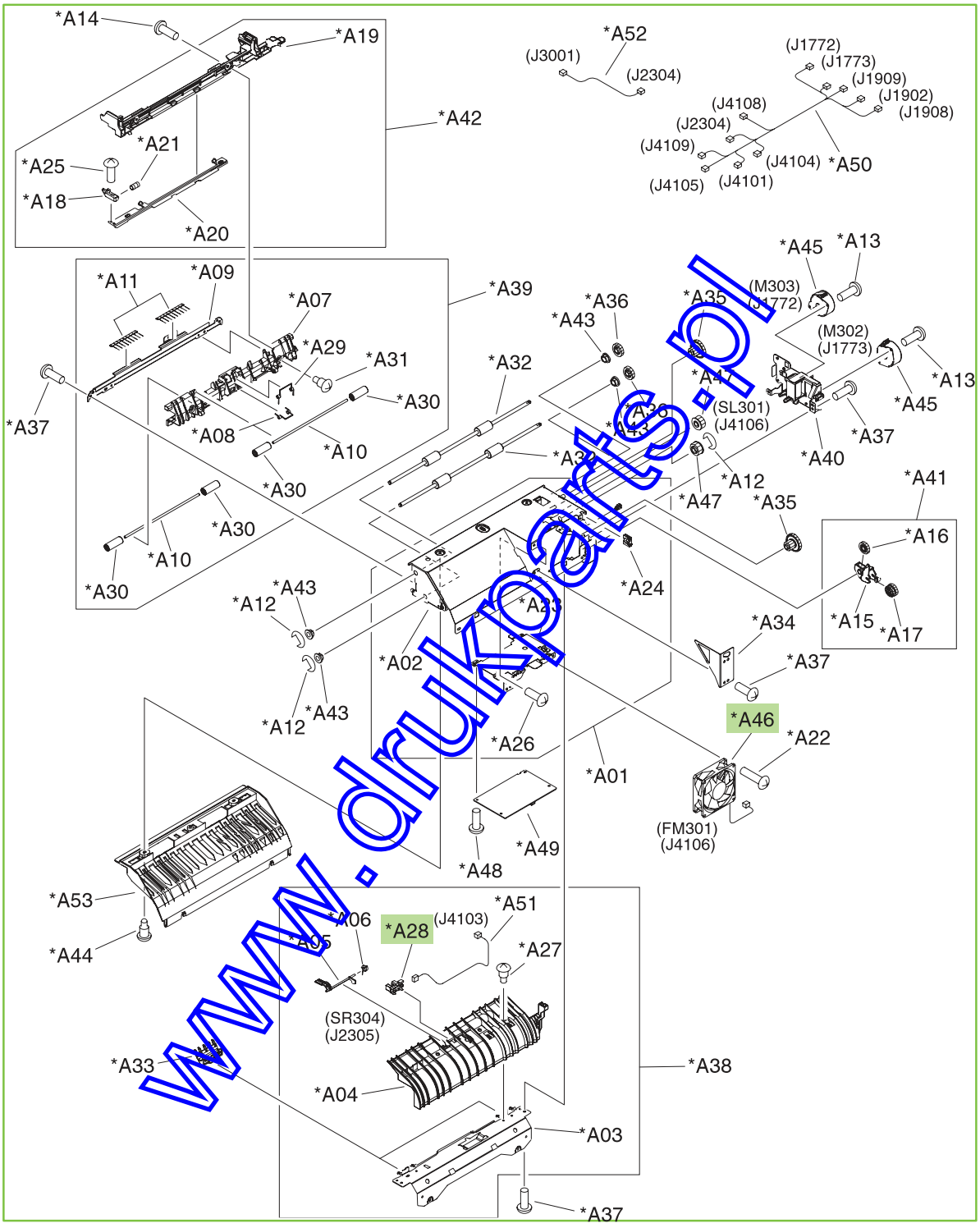

www.drukoarts.pl

Table 9-19 Printer duplexing-reverse assembly

Ref	Description	Part number	Qty
All	Duplexing-reverse assembly	RM1-3652-000CN	1
A28	Photo interrupter, TLP1243	WG8-5696-000CN	1
A46	Fan	RK2-1378-000CN	1

NOTE: Only highlighted parts are orderable.

www.drukparts.pl

Figure 9-22 Printer duplexing-tray assembly (duplex model)

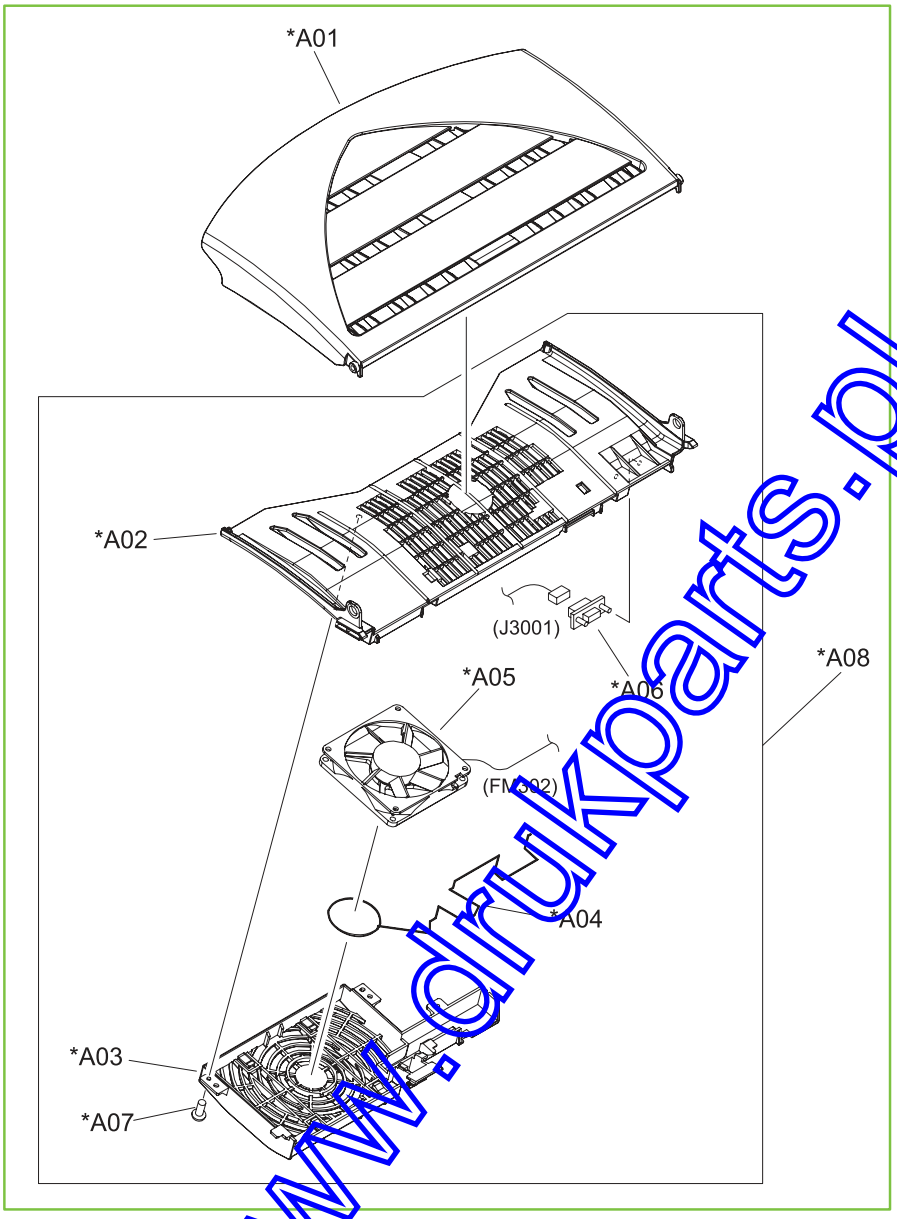

www.drukparts.pl

Table 9-20 Printer duplexing-tray assembly

Ref	Description	Part number	Qty
All	Duplex-switchback tray assembly kit	Q3931-67921	1

NOTE: Only highlighted parts are orderable.

www.drukparts.pl

Figure 9-23 Printer duplexing-feed assembly (duplex model)

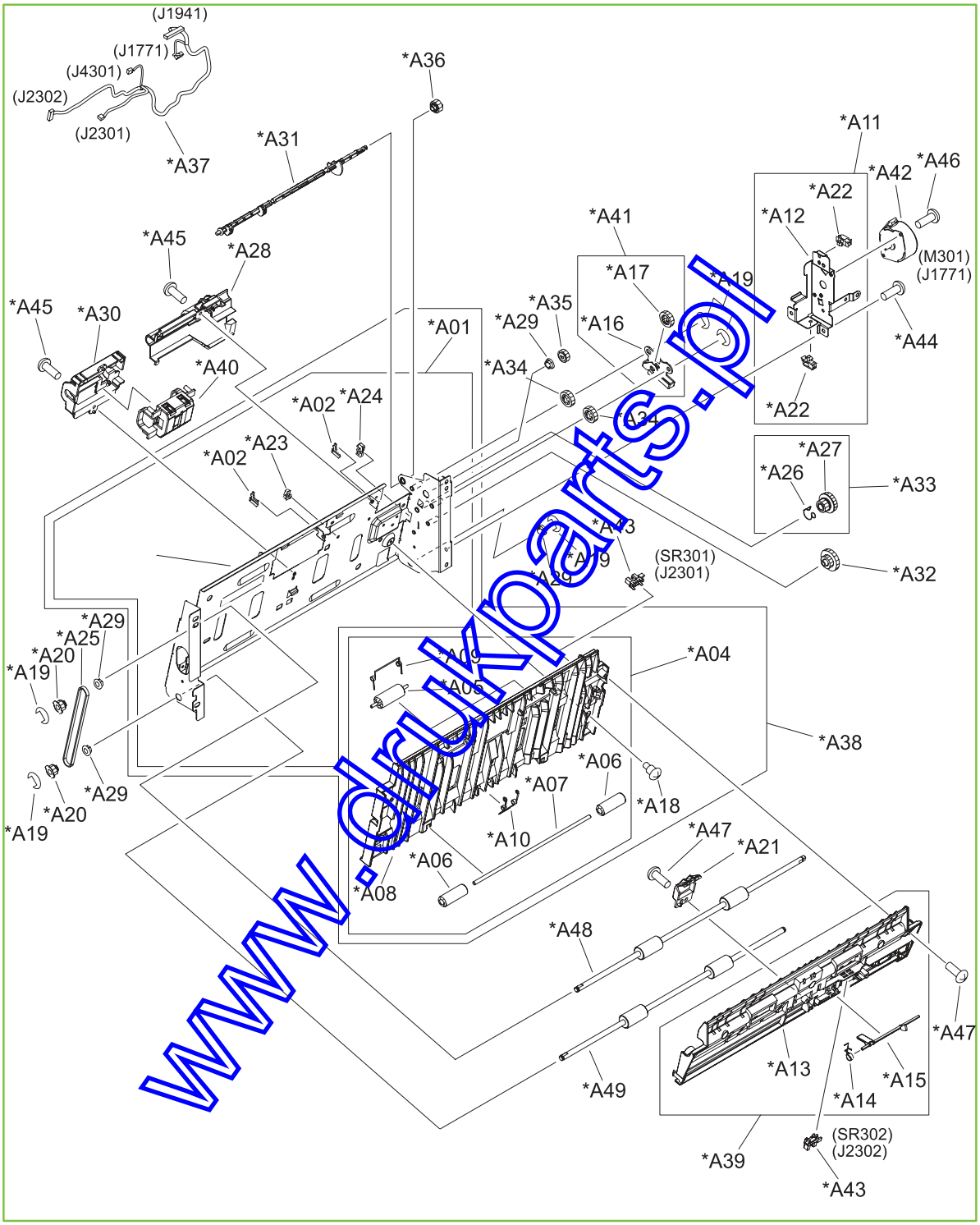

www.drukparts.pl

Table 9-21 Printer duplexing-feed assembly

Ref	Description	Part number	Qty
All	Duplexing-feed assembly	RM1-3665-000CN	1

NOTE: Only highlighted parts are orderable.

www.drukparts.pl

Figure 9-24 Printer PCA assembly location

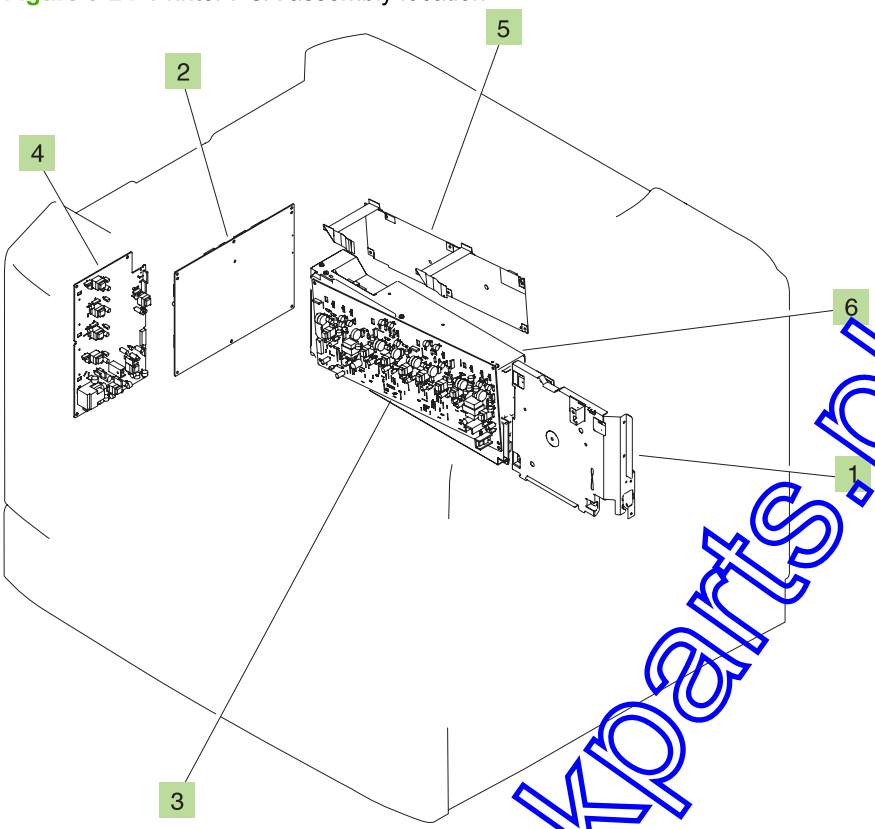

www.drukparts.pl

Table 9-22 Printer PCA assembly location

Ref	Description	Part number	Qty
1	Fixing power-supply assembly	RM1-3218-000CN	1
2	DC controller kit with service document	Q3931-67922	1
3	High-voltage-transfer A PCA assembly	RM1-3582-000CN	1
4	High-voltage-transfer B PCA assembly	RM1-5475-000CN	1
5	Memory-tag PCA assembly	RM1-3585-000CN	1
6	Low-voltage power-supply assembly	RM1-3594-000CN	1

NOTE: Only highlighted parts are orderable.

www.drukparts.pl

Input accessories

Input trays

Figure 9-25 Input-tray units (1x500-sheet and 3x500-sheet)

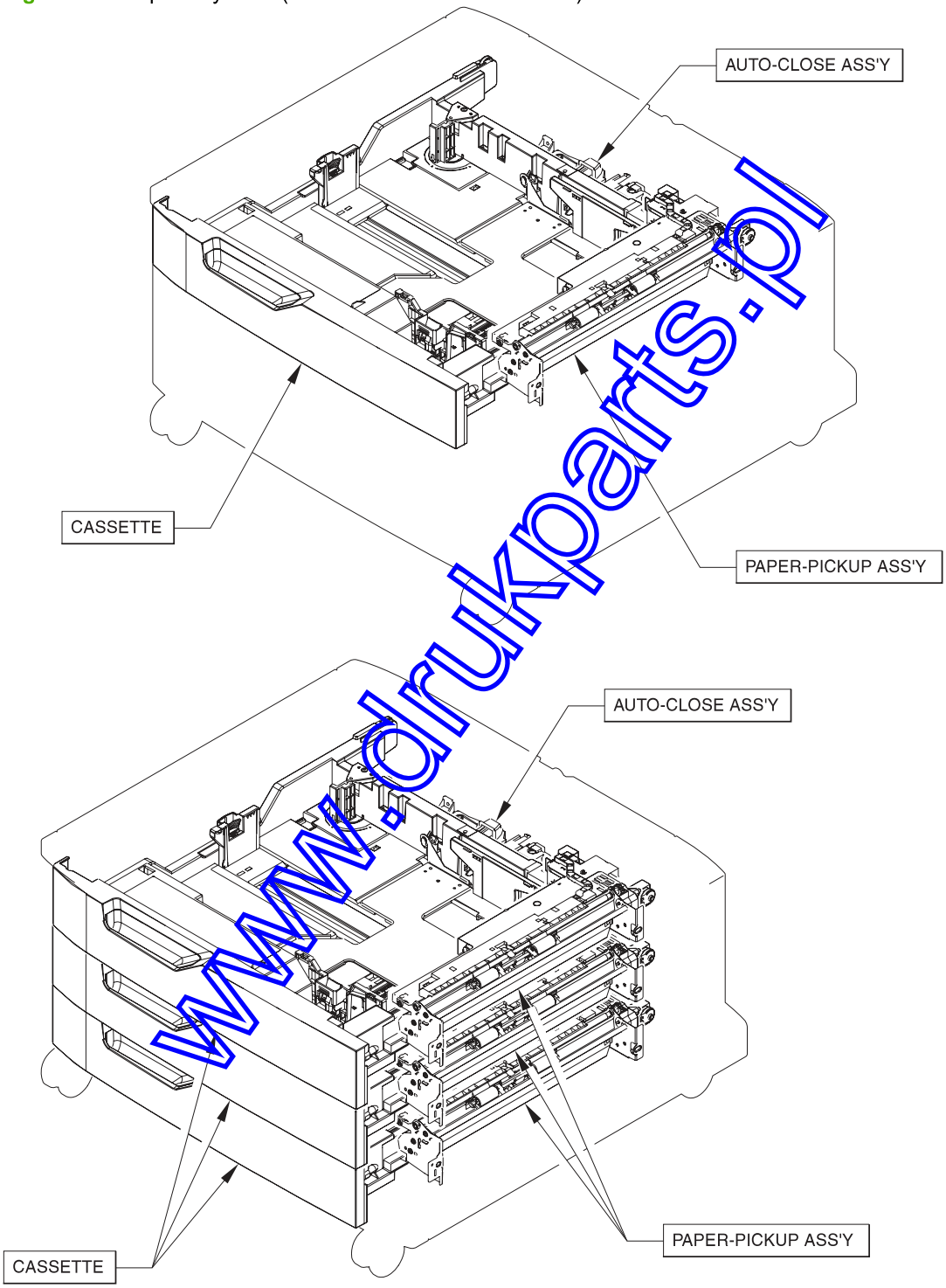

www.drukparts.pl

NOTE: Only highlighted parts are orderable.

www.drukparts.pl

Figure 9-26 Input-tray main body (1x500-sheet)

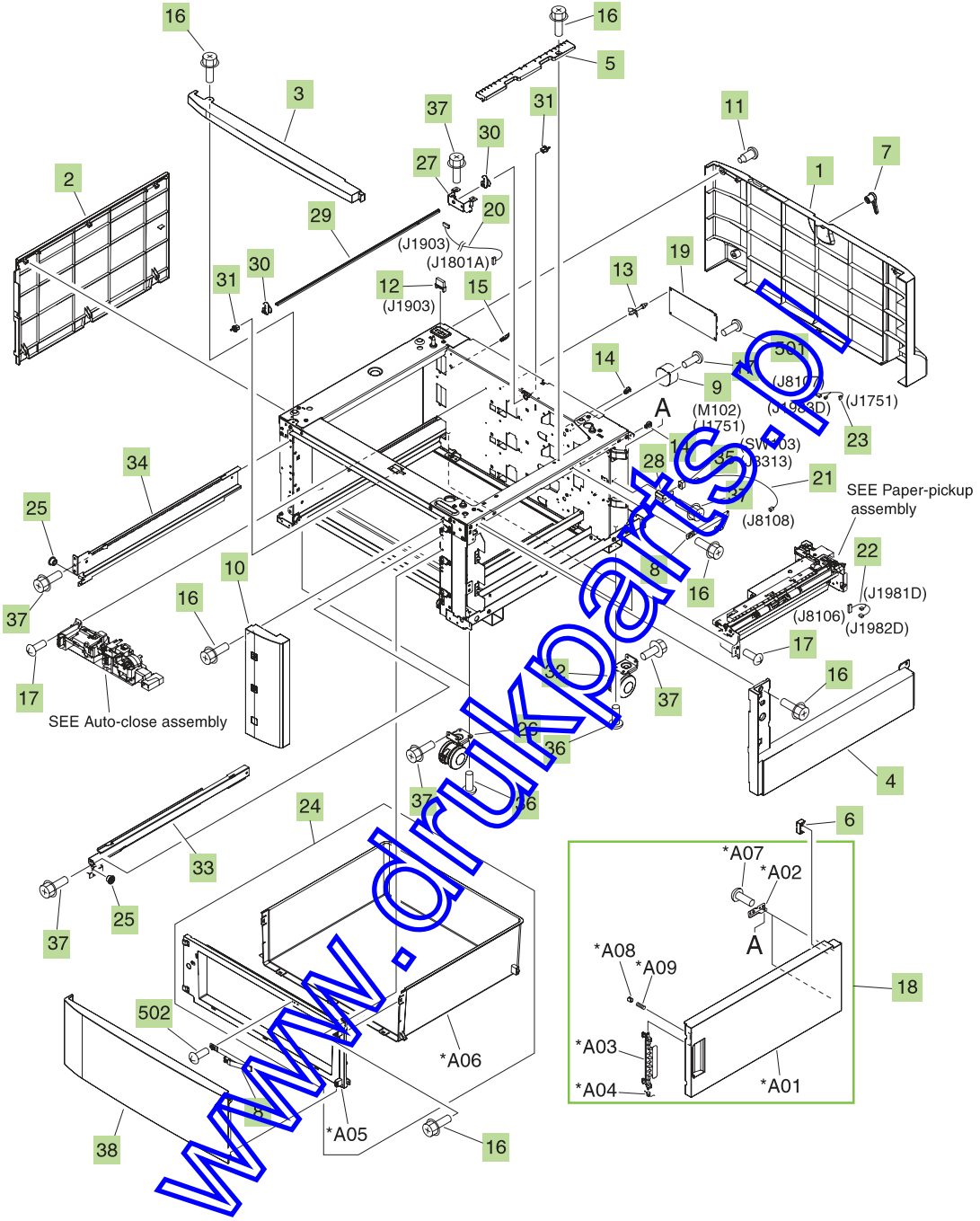

www.drukparts.pl

Table 9-23 Input-tray main body (1x500-sheet)

Ref	Description	Part number	Qty
1	Cover, rear	RC1-9871-000CN	1
2	Cover, left	RC1-9872-000CN	1
3	Cover, front-upper	RC1-9873-000CN	1
4	Cover, right-lower	RC1-9874-000CN	1
5	Guide, paper-feed roller	RC1-9881-000CN	1
6	Stopper, right-door	RC1-9882-000CN	1
7	Lever, lock	RC1-9883-000CN	1
8	Tape, door	RC1-9884-000CN	2
9	Motor, stepping, DC	RK2-1331-000CN	1
10	Cover, right-front	RL1-1322-000CN	1
11	Screw, stepped	RS5-9099-000CN	4
12	Connector, drawer	VS1-7257-012CN	1
13	Support, PCA	VT2-0001-008CN	2
14	Saddle, wire	WT2-5694-000CN	2
15	Clamp, cable	WT2-5738-000CN	1
16	Screw, RS, M4x8	XA9-1448-000CN	13
14	Screw, TP, M3x6	XA9-1469-000CN	7
15	Right-door assembly	RM1-3538-000CN	1
19	Paper-feed PCA assembly	RM1-3569-000CN	1
20	Cable, pickup-option drawer	RM1-3571-000CN	1
21	Cable, pickup-option door switch	RM1-3572-000CN	1
22	Cable, option-sensor PCA connect	RM1-3574-000CN	1
23	Cable, paper-pickup option	RM1-3575-000CN	1
24	Stock-box assembly	RM1-3539-000CN	1
25	Roller, rail	RC1-9231-000CN	4
26	Caster, double-lock, front	RC1-9896-000CN	2
27	Support, lock shaft	RC1-9900-000CN	1
28	Plate, switch cover	RC1-9901-000CN	1
29	Shaft, lock	RC1-9912-000CN	1
30	Arm, lock	RC1-9913-000CN	2
31	Bushing	RC1-9915-000CN	2
32	Caster, rear	RC1-9917-000CN	2
33	Rail, cassette, right	RL1-1310-000CN	2
34	Rail, cassette, left	RL1-1311-000CN	2

www.drukparts.pl

Table 9-23 Input-tray main body (1x500-sheet) (continued)

Ref	Description	Part number	Qty
35	Switch, button	WC2-5512-000CN	1
36	Screw, with washer, M5x12	XA9-0912-000CN	8
37	Screw, RS, M4x8	XA9-1448-000CN	75
38	Door, stock	RC1-9921-000CN	1
501	Screw, with washer, M3x6	XB2-8300-607CN	2
502	Screw, tapping, pan-head, M4x10	XB4-7401-006CN	1

NOTE: Only highlighted parts are orderable.

www.drukparts.pl

www.drukparts.pl

Figure 9-27 Input-tray main body (3x500-sheet)

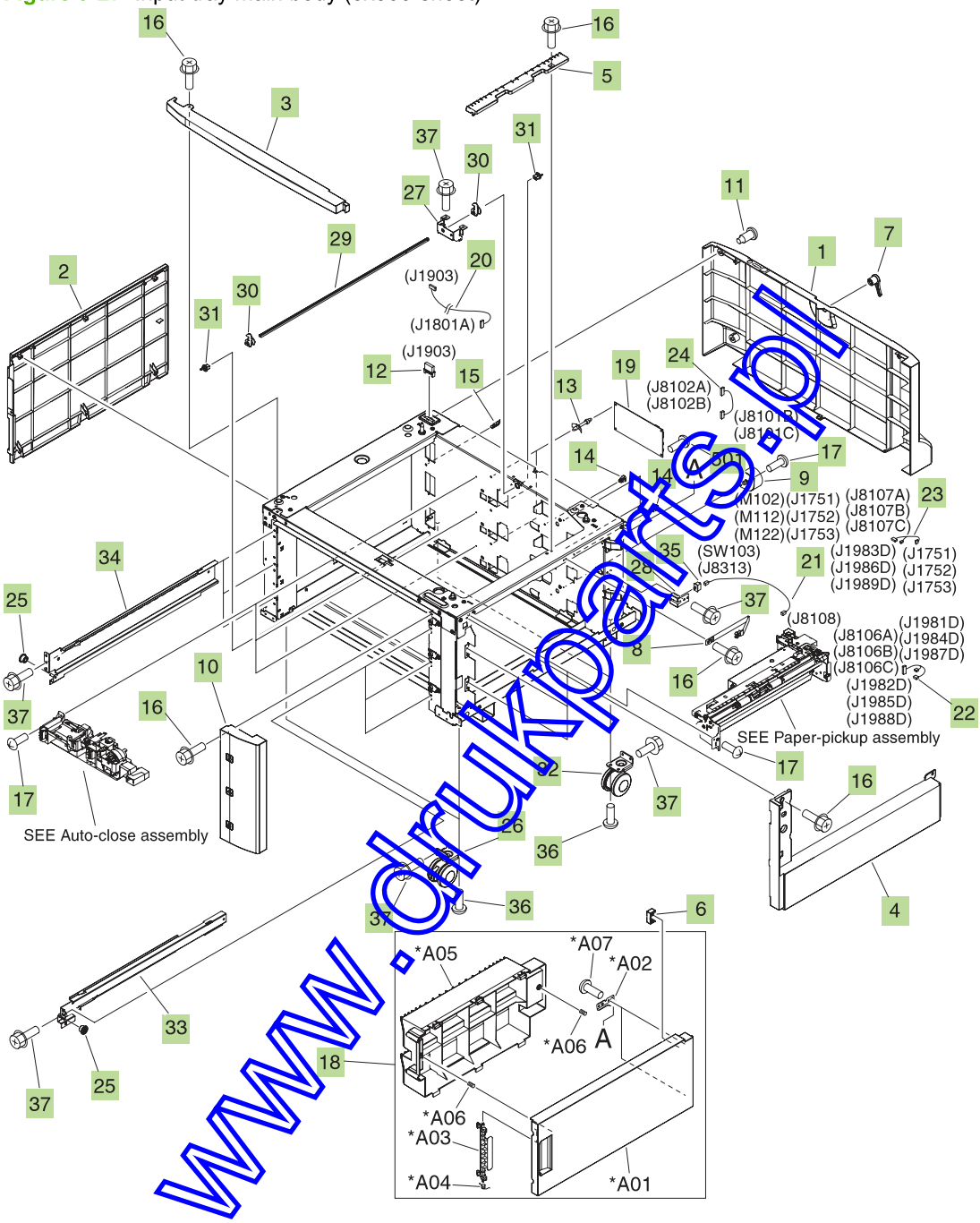

www.drukparts.pl

Table 9-24 Input-tray main body (3x500-sheet)

Ref	Description	Part number	Qty
1	Cover, rear	RC1-9871-000CN	1
2	Cover, left	RC1-9872-000CN	1
3	Cover, front-upper	RC1-9873-000CN	1
4	Cover, right-lower	RC1-9874-000CN	1
5	Guide, paper-feed roller	RC1-9881-000CN	1
6	Stopper, right-door	RC1-9882-000CN	1
7	Lever, lock	RC1-9883-000CN	1
8	Tape, door	RC1-9884-000CN	1
9	Motor, stepping, DC	RK2-1331-000CN	3
10	Cover, right-front	RL1-1321-000CN	1
11	Screw, stepped	RS5-9099-000CN	4
12	Connector, drawer	VS1-7757-012CN	1
13	Support, PCA	VT2-0001-008CN	6
14	Saddle, wire	WT2-5694-000CN	2
15	Clamp, cable	WT2-5738-000CN	1
16	Screw, RS, M4x8	XA9-1448-000CN	10
17	Screw, TP, M3x6	XA9-1469-000CN	21
18	Right-door assembly	RM1-3537-000CN	1
19	Paper-feed PCA assembly	RM1-3569-000CN	3
20	Cable, paper-pickup-option drawer	RM1-3571-000CN	1
21	Cable, pickup-option door switch	RM1-3572-000CN	1
22	Cable, option-sensor PCA connect	RM1-3574-000CN	3
23	Cable, paper-pickup option	RM1-3575-000CN	3
24	Cable, pickup-option PCA connect	RM1-3573-000CN	2
25	Roller, rail	RC1-9231-000CN	6
26	Caster, double-lock, front	RC1-9896-000CN	2
27	Support, lock shaft	RC1-9900-000CN	1
28	Plate, switch cover	RC1-9901-000CN	1
29	Shaft, lock	RC1-9912-000CN	1
30	Arm, lock	RC1-9913-000CN	2
31	Bushing	RC1-9915-000CN	2
32	Caster, rear	RC1-9917-000CN	2
33	Rail, cassette, right	RL1-1310-000CN	3
34	Rail, cassette, left	RL1-1311-000CN	3

www.drukparts.pl

Table 9-24 Input-tray main body (3x500-sheet) (continued)

Ref	Description	Part number	Qty
35	Switch, button	WC2-5512-000CN	1
36	Screw, with washer, M5x12	XA9-0912-000CN	8
37	Screw, RS, M4x8	XA9-1448-000CN	77
501	Screw, with washer, M3x6	XB2-8300-607CN	6

NOTE: Only highlighted parts are orderable.

www.drukparts.pl

www.drukparts.pl

Figure 9-28 Input-tray auto-close assembly

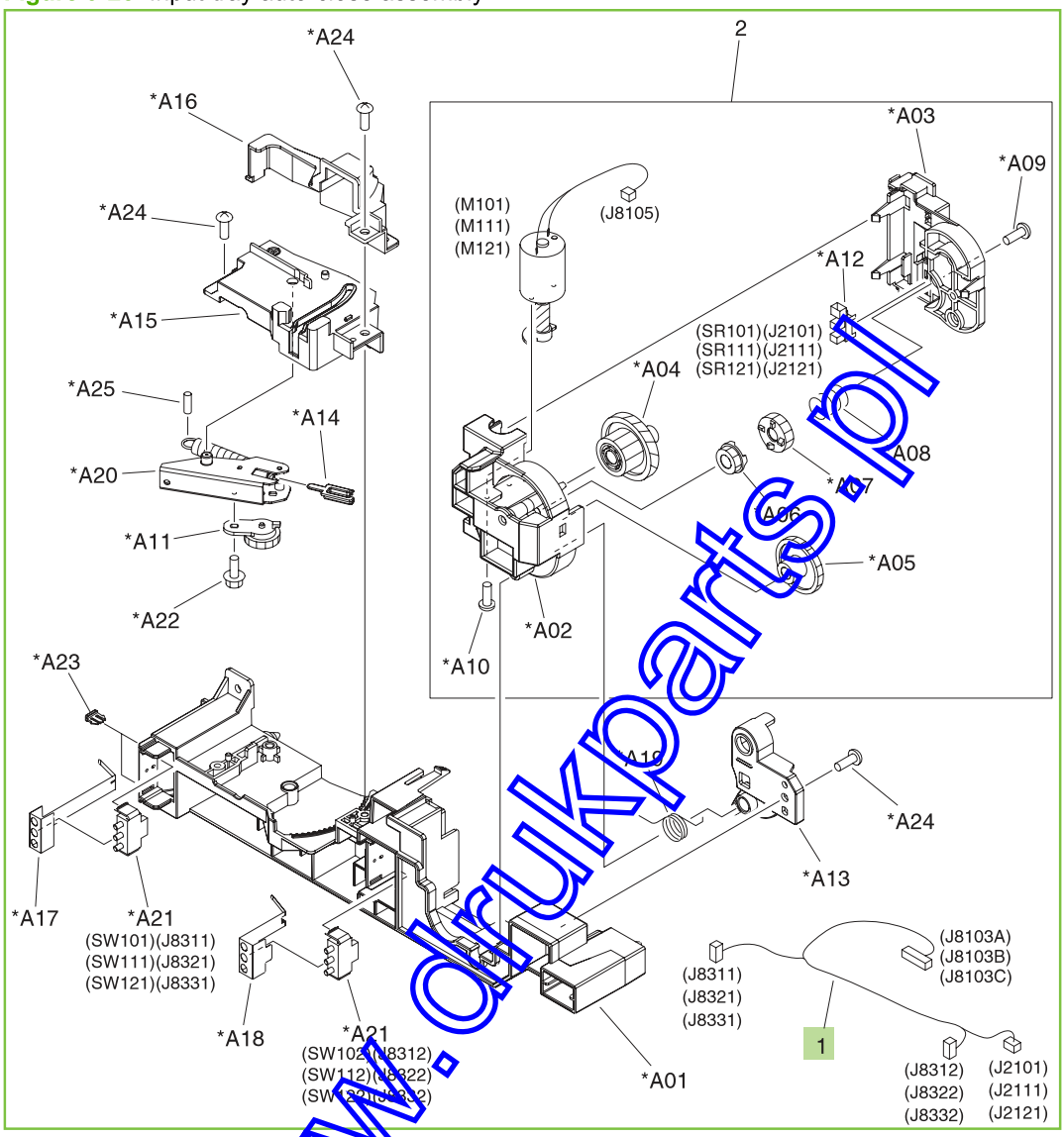

www.drukparts.pl

Table 9-25 Input-tray auto-close assembly

Ref	Description	Part number	Qty
All	Auto-close assembly, 1x500-sheet	RM1-3531-040CN	1
All	Auto-close assembly, 3x500-sheet	RM1-3531-040CN	3
1	Cable, pickup-option lifter unit	RM1-3576-000CN	1

NOTE: Only highlighted parts are orderable.

www.drukparts.pl

Figure 9-29 Input-tray cassette

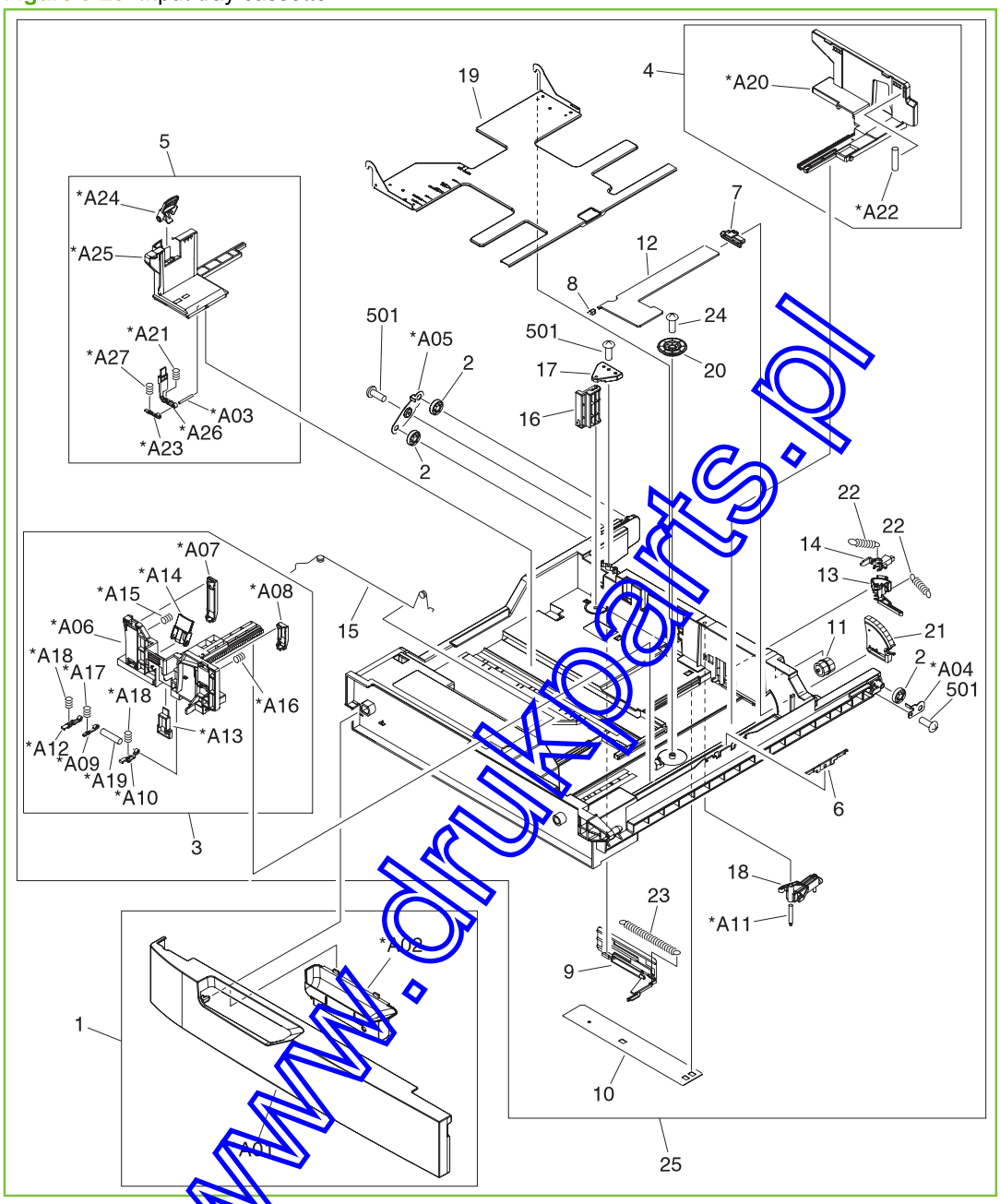

www.drukparts.pl

Table 9-26 Input-tray cassette

Ref	Description	Part number	Qty
All	Cassette (1x500-sheet)	RM1-3529-000CN	1
All	Cassette (3x500-sheet)	RM1-3529-000CN	3

NOTE: Only highlighted parts are orderable.

www.drukparts.pl

Figure 9-30 Input-tray paper-pickup assembly

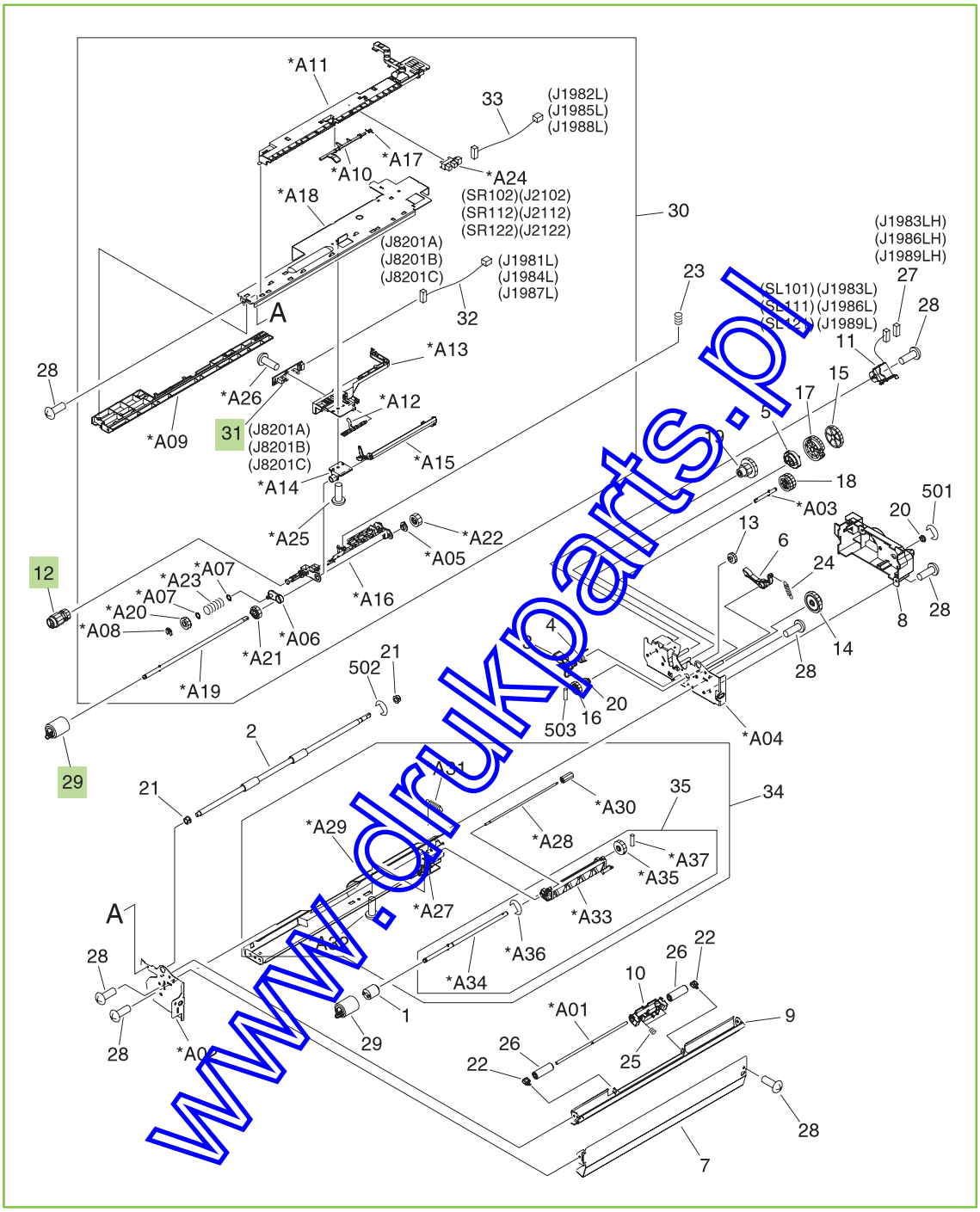

www.drukparts.pl

Table 9-27 Input-tray paper-pickup assembly

Ref	Description	Part number	Qty
All	Paper-pickup assembly (1x500-sheet)	RM1-3533-000CN	1
All	Paper-pickup assembly (3x500-sheet)	RM1-3533-000CN	1
12	Roller, paper-pickup	RL1-1289-000CN	1
29	Paper feed-roller assembly	RM1-0037-020CN	2
31	Option paper-sensor PCA assembly	RM1-3570-000CN	1

NOTE: Only highlighted parts are orderable.

www.drukparts.pl

Figure 9-31 Input-tray PCA assembly

1x500

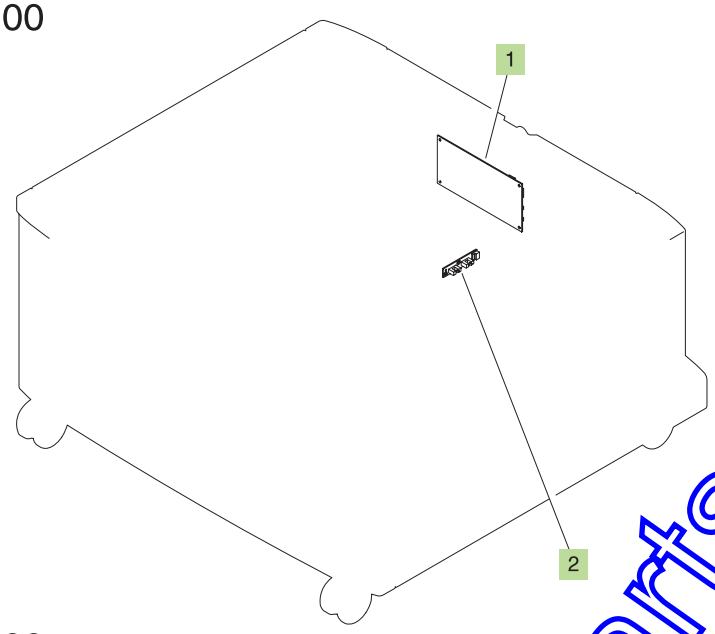

3x500

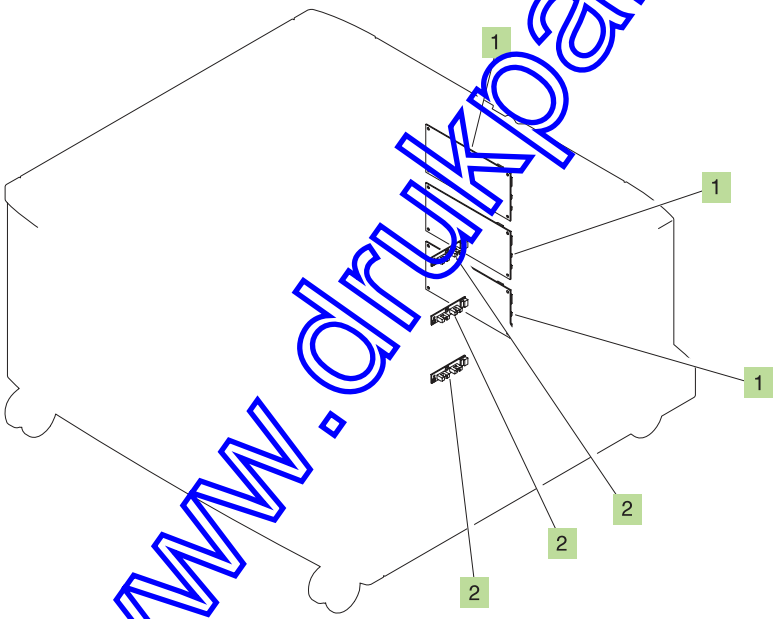

www.drukparts.pl

Table 9-28 Input-tray PCA assembly

Ref	Description	Part number	Qty
1	Paper-feed PCA assembly (1x500-sheet)	RM1-3569-000CN	1
1	Paper-feed PCA assembly (3x500-sheet)	RM1-3569-000CN	3

NOTE: Only highlighted parts are orderable.

www.drukparts.pl

Output accessories

Intermediate paper-transfer unit (IPTU)

Figure 9-32 Intermediate-feed main body

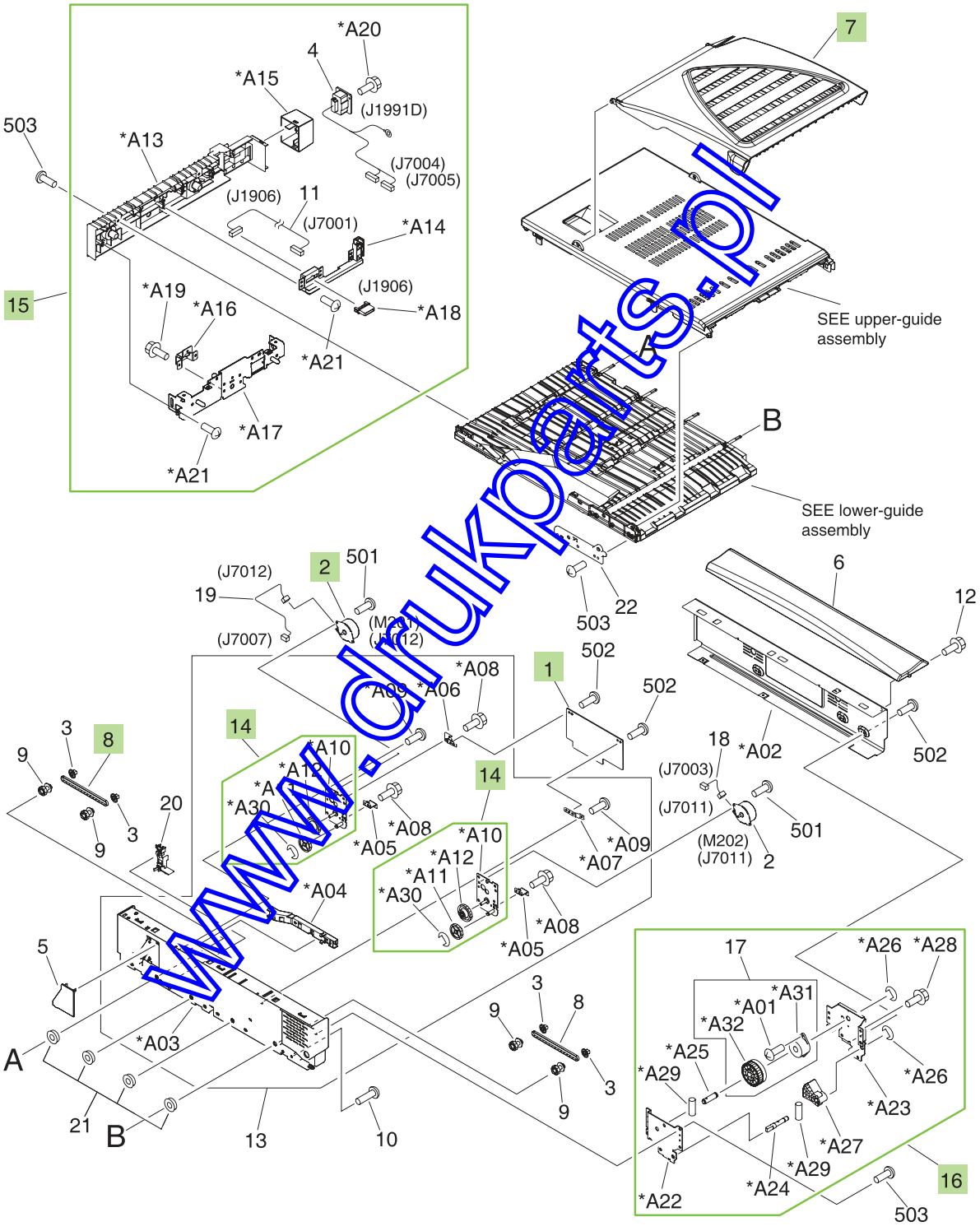

www.drukparts.pl

Table 9-29 Intermediate-feed main body

Ref	Description	Part number	Qty
1	Intermediate paper-transfer unit (IPTU)-driver PCA assembly	RM1-3559-000CN	1
2	Motor, stepping, DC	RK2-1320-000CN	2
7	Cover, intermediate-feed SW.	RC1-9667-000CN	1
8	Belt, paper-feed, cogged	RC1-9674-000CN	2
14	Drive-belt assembly	RM1-3684-000CN	2
15	Fin-lock assembly	RM1-3685-000CN	1
16	Damper assembly	RM1-3688-000CN	1

NOTE: Only highlighted parts are orderable.

www.drukparts.pl

Figure 9-33 Intermediate-feed lower-guide assembly

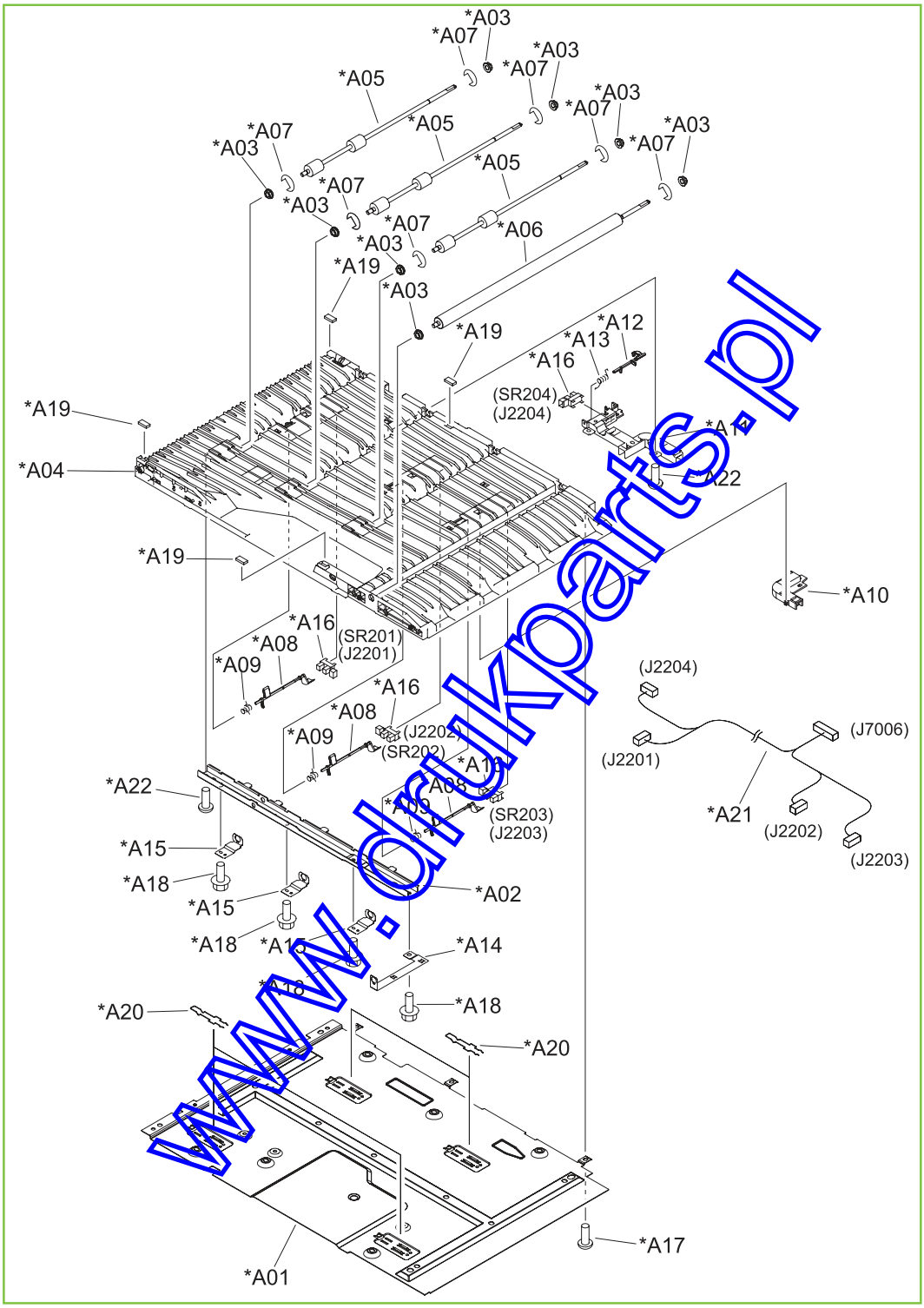

www.drukparts.pl

Table 9-30 Intermediate-feed lower-guide assembly

Ref	Description	Part number	Qty
All	Lower-guide assembly	RM1-3686-000CN	1

NOTE: Only highlighted parts are orderable.

www.drukparts.pl

Figure 9-34 Intermediate-feed upper-guide assembly

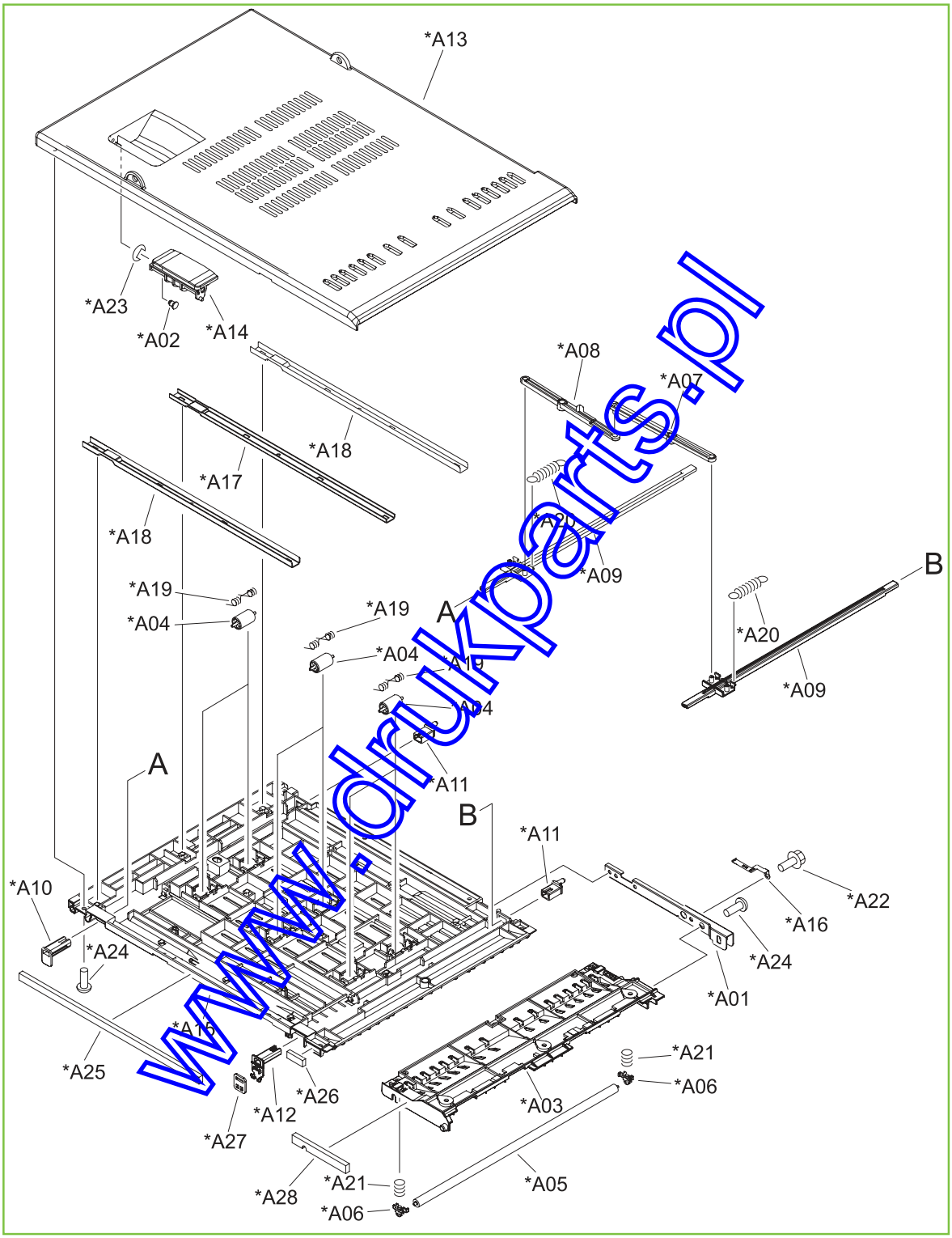

www.drukparts.pl

Table 9-31 Intermediate-feed upper-guide assembly

Ref	Description	Part number	Qty
All	Upper-guide assembly	RM1-3687-000CN	1

NOTE: Only highlighted parts are orderable.

www.drukparts.pl

Figure 9-35 PCA assembly

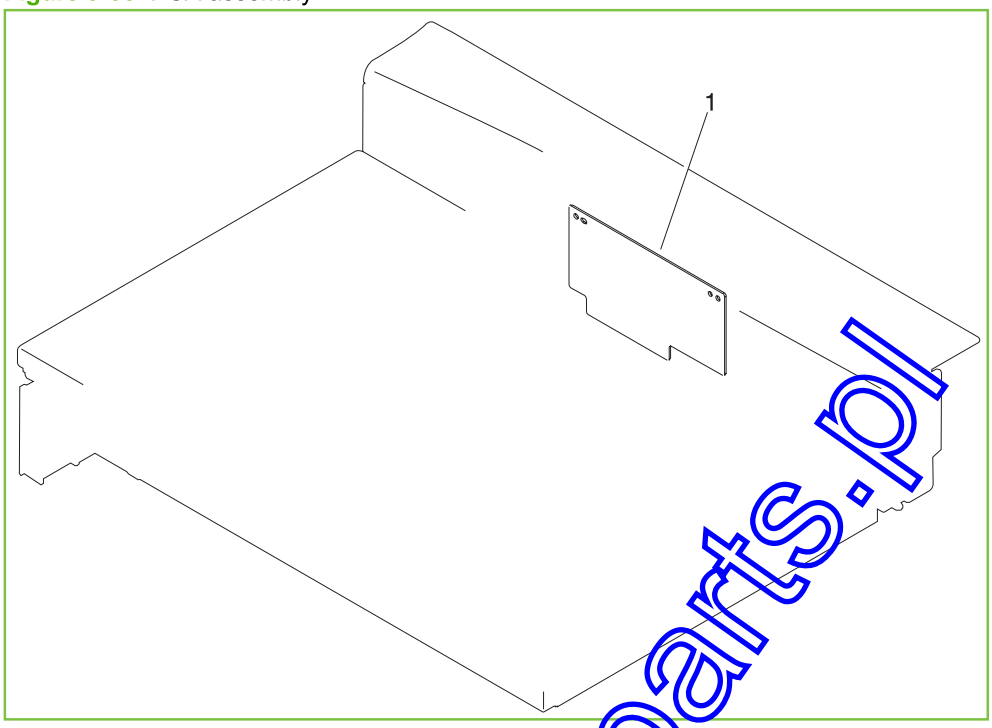

www.drukparts.pl

Table 9-32 PCA assembly

Ref	Description	Part number	Qty
1	Intermediate paper-transfer unit (IPTU)-driver PCA assembly	RM1-3559-000CN	1

NOTE: Only highlighted parts are orderable.

www.drukparts.pl

Stapler/stacker and booklet-maker

Figure 9-36 Stapler/stacker unit

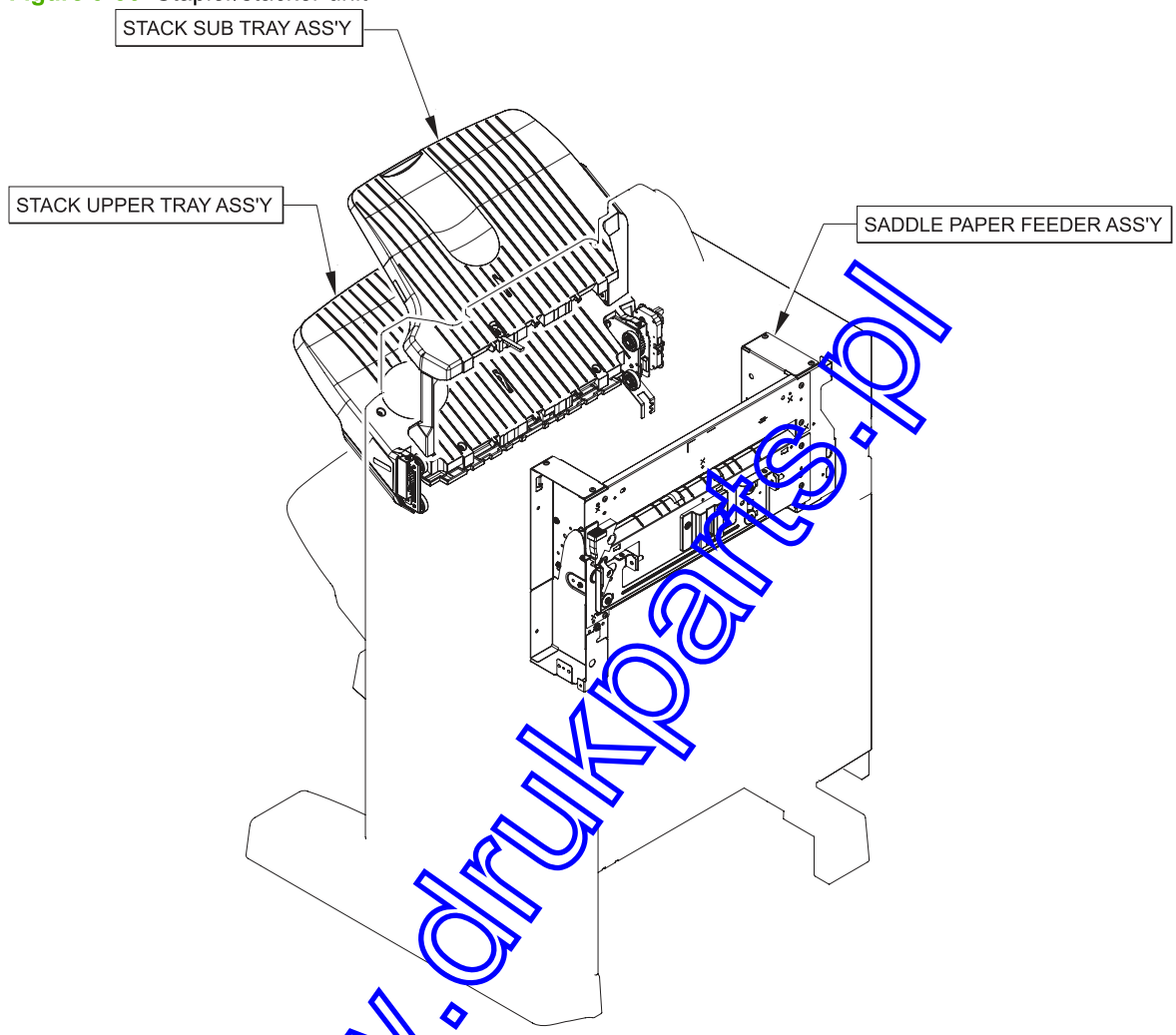

NOTE: Only highlighted parts are orderable.

www.drukparts.pl

Figure 9-37 Booklet-maker (multi-function finisher) whole unit

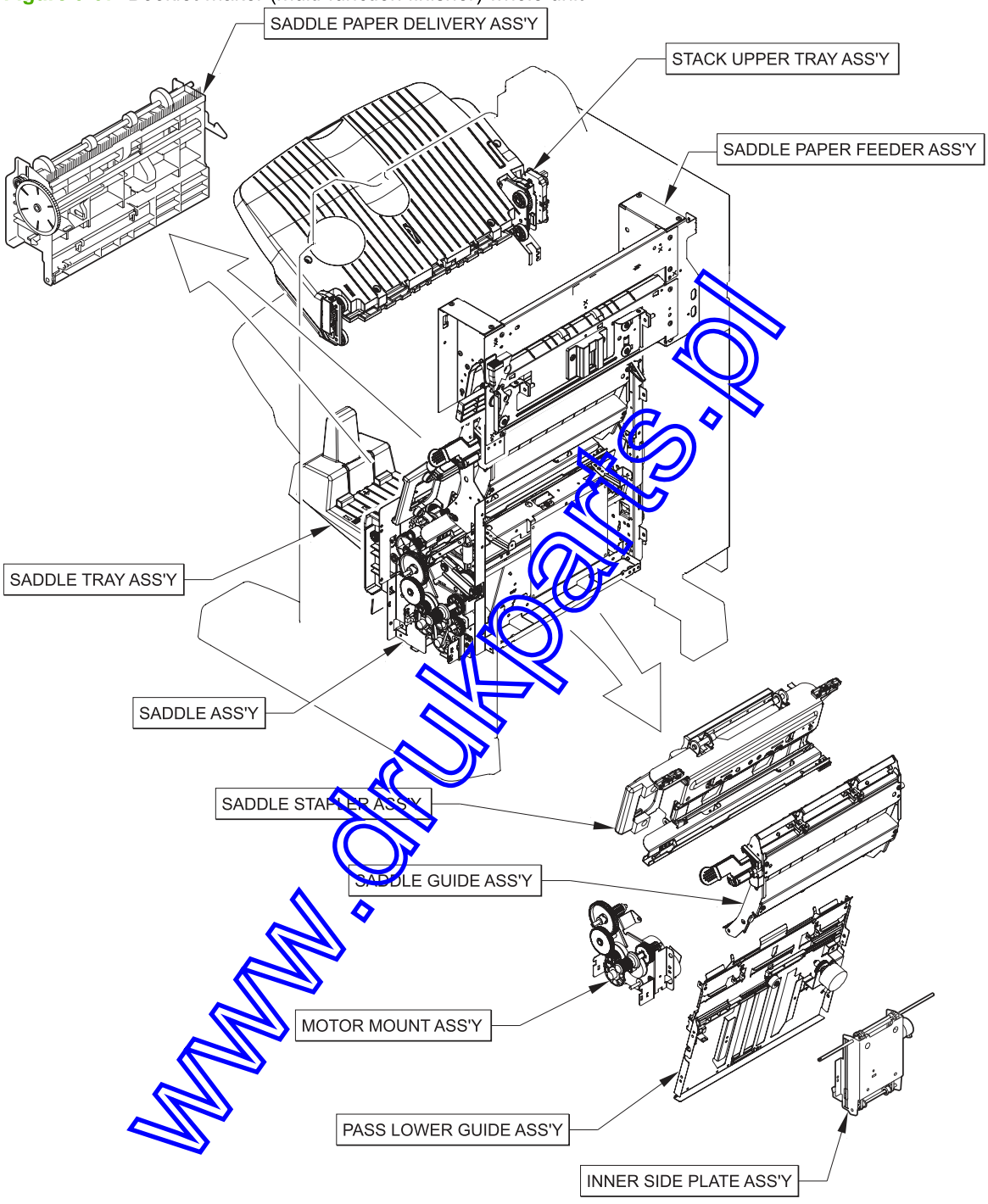

www.drukparts.pl

NOTE: Only highlighted parts are orderable.

Figure 9-38 External panels and covers (stapler/stacker)

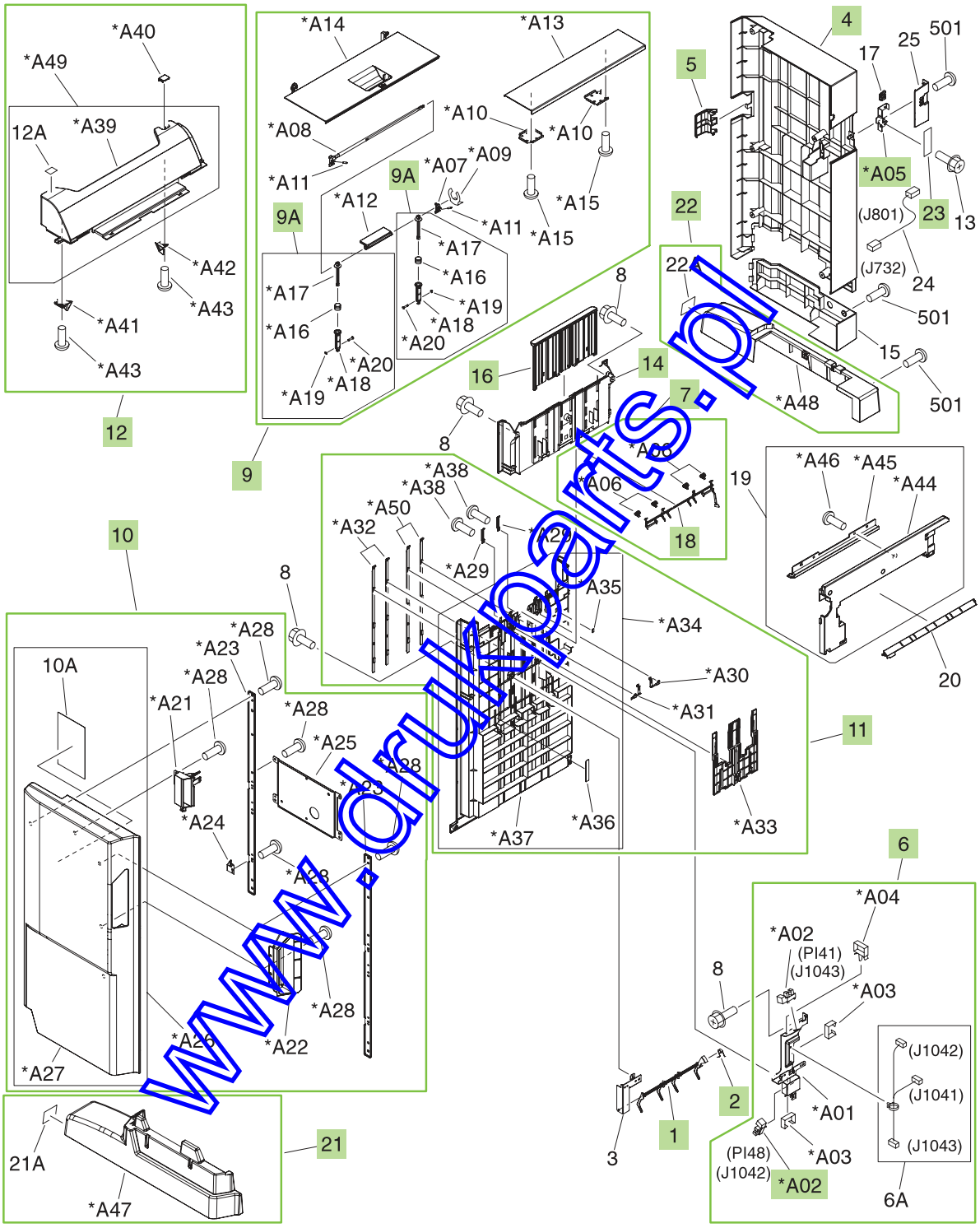

www.druqparts.pl

Table 9-33 External panels and covers (stapler/stacker)

Ref	Description	Part number	Qty
1	Flag, paper-sensing sensor	FC5-5004-000CN	1
2	Spring, torsion	FC5-5005-000CN	1
4	Cover, rear	RC2-1278-000CN	1
5	Cover, tray-connector	RC2-1279-000CN	1
6	Paper-face sensor assembly	4G3-0934-000CN	1
7	Paper-face sensing assembly	4G3-1624-000CN	1
9	Top-door (upper-cover) assembly	RM1-4121-000CN	1
9A	Link-slide assembly	4G3-0271-000CN	2
10	Front-door assembly	RM1-4134-000CN	1
11	Lower height-guide assembly	RM1-4135-000CN	1
12	Left upper-cover assembly	RM1-4179-000CN	1
14	Panel, height, upper	RC2-1283-000CN	1
16	Cover, option-slide	RC2-1347-000CN	1
18	Flag, paper-face sensing, upper	FC5-4162-000CN	1
21	Cover, front-lower	RL1-1717-000CN	1
22	Cover, rear-lower	RL1-1718-000CN	1
23	LED-PCA assembly	RM1-4141-000CN	1
A02	Photo interrupter, TLP1242	WG8-5593-000CN	2
A05	Mount, LED-PCA	RC2-1735-000CN	1

NOTE: Only highlighted parts are orderable.

www.drukparts.pl

Figure 9-39 External panels and covers (booklet-maker)

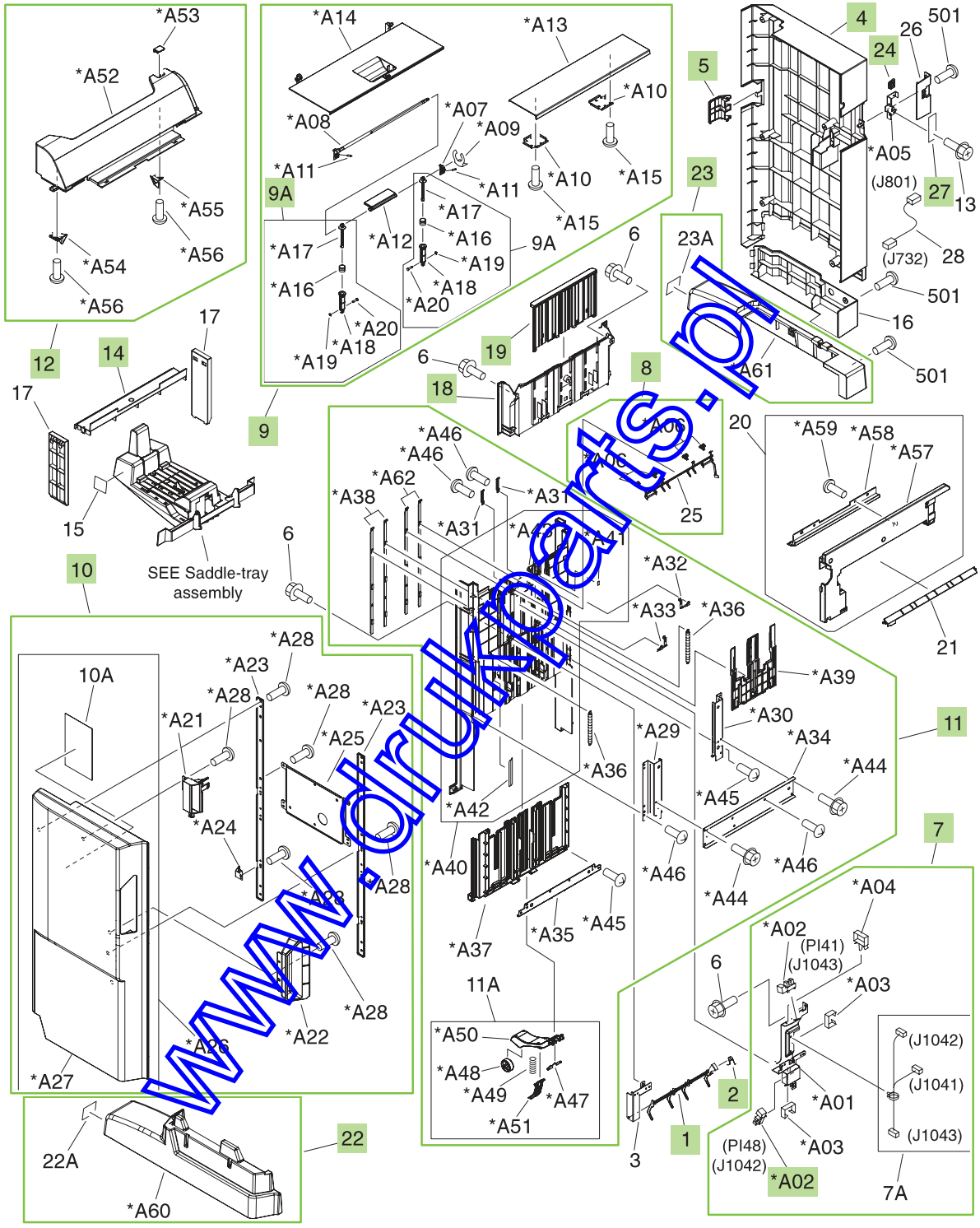

www.druknarts.pl

Table 9-34 External panels and covers (booklet-maker)

Ref	Description	Part number	Qty
1	Flag, paper-sensing sensor	FC5-5004-000CN	1
2	Spring, torsion	FC5-5005-000CN	1
4	Cover, rear	RC2-1278-000CN	1
5	Cover, tray-connector	RC2-1279-000CN	1
7	Paper-face sensor assembly	4G3-0934-000CN	1
8	Paper-face sensing assembly	4G3-1624-000CN	1
9	Top-door (upper-cover) assembly	RM1-4121-000CN	1
9A	Link-slide assembly	4G3-0271-000CN	2
10	Front-door assembly	RM1-4122-000CN	1
11	Middle-height cover assembly	RM1-4119-000CN	1
12	Left-upper cover assembly	RM1-4129-000CN	1
14	Cover, left-lower	RC2-1280-000CN	1
18	Panel, height, upper	RC2-1283-000CN	1
19	Guide, side-wall	RC2-1284-000CN	1
22	Cover, front-lower	RL1-1717-000CN	1
23	Cover, rear-lower	RL1-1718-000CN	1
24	Window, LED	RC2-1734-000CN	1
27	LED-PCA assembly	RM1-4141-000CN	1
A02	Photo interrupter, TLP1242	WG8-5593-000CN	2

NOTE: Only highlighted parts are orderable.

www.drukparts.pl

Figure 9-40 Finisher main body (1 of 5) (stapler/stacker and booklet-maker)

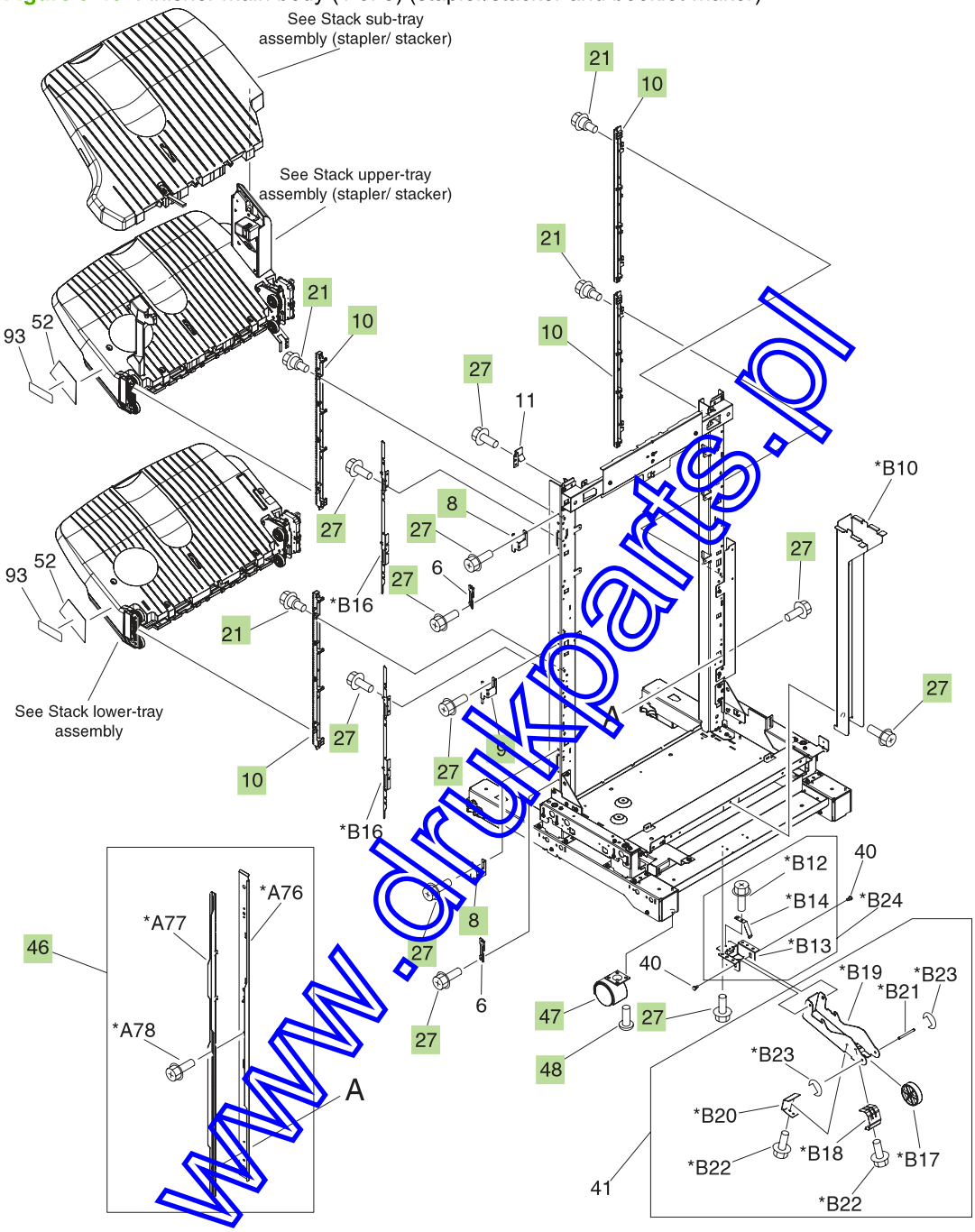

www.drukparts.pl

Figure 9-41 Finisher main body (2 of 5) (stapler/stacker and booklet-maker)

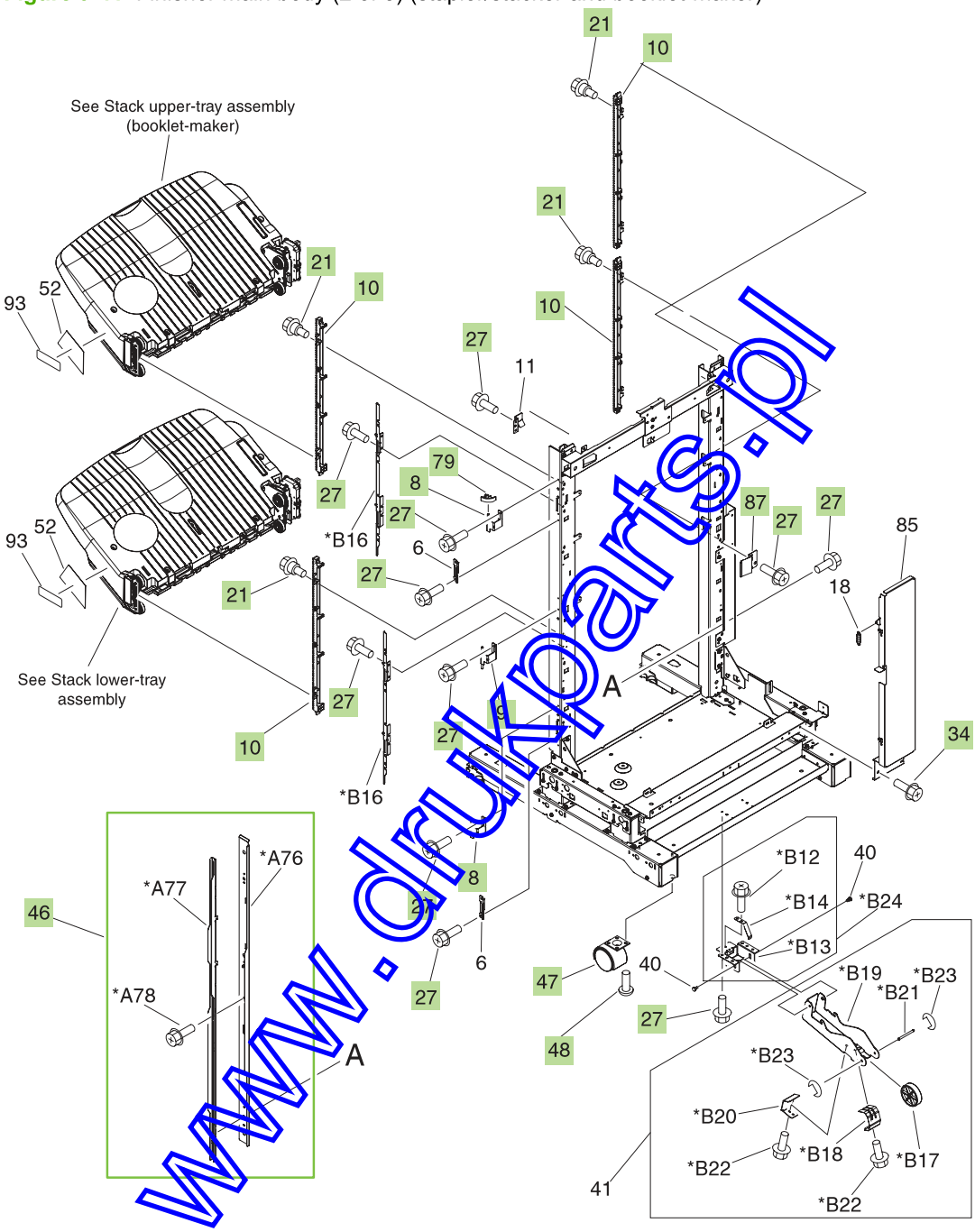

www.drukparts.pl

Figure 9-42 Finisher main body (3 of 5) (stapler/stacker and booklet-maker)

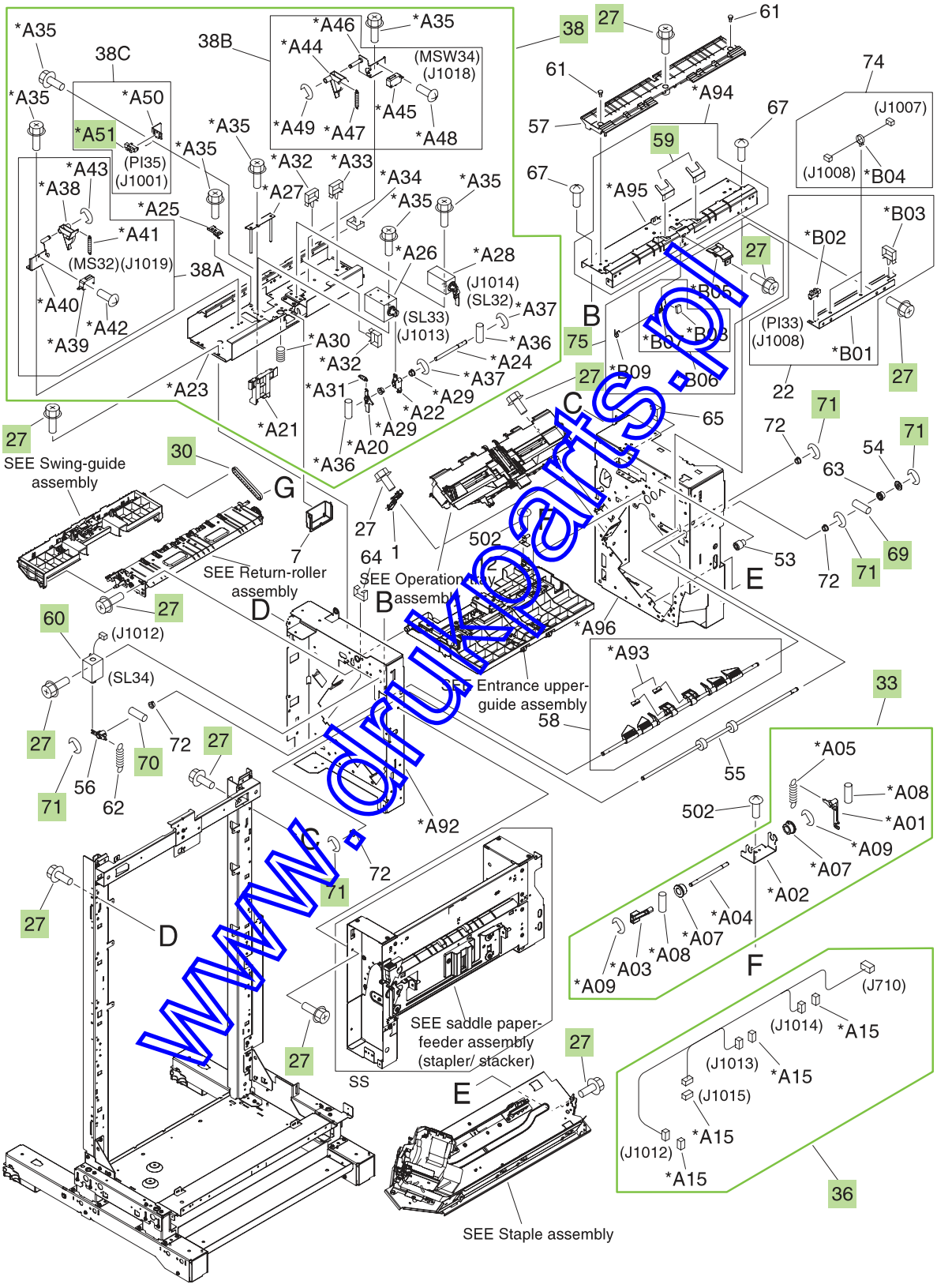

www.drukarts.pl

Figure 9-43 Finisher main body (4 of 5) (stapler/stacker and booklet-maker)

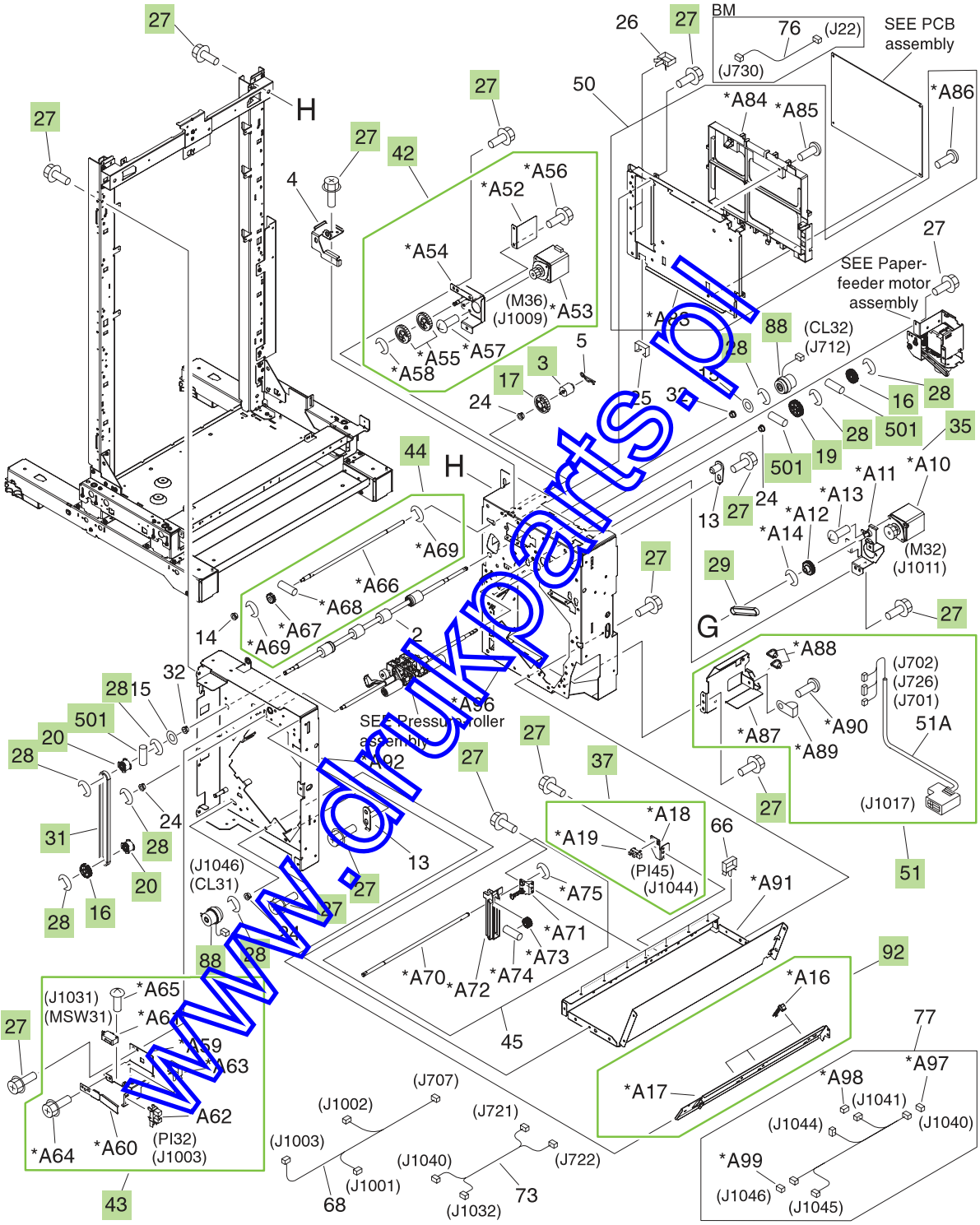

www.dukparts.pl

Figure 9-44 Finisher main body (5 of 5) (stapler/stacker and booklet-maker)

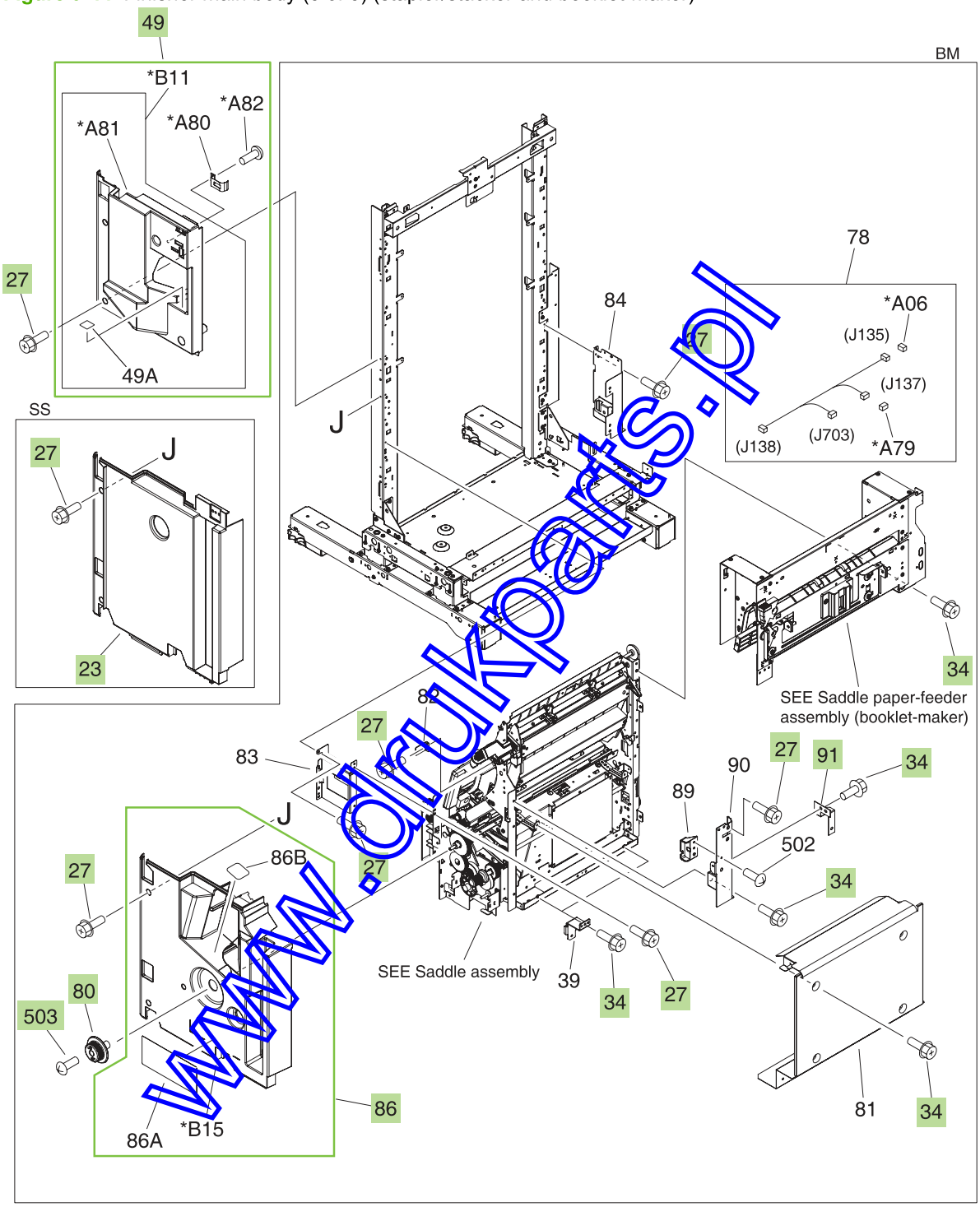

www.drukparts.pl

Table 9-35 Finisher main body (stapler/stacker and booklet-maker)

Ref	Description	Part number	Qty
3	Limiter, torque	FC5-3657-000CN	1
8	Hinge, front-door, 1	FC5-4991-030CN	2
9	Hinge, front-door, 2	FC5-4992-030CN	1
10	Rack, rail	FC5-5436-000CN	4
16	Gear, 30T	FU5-0428-000CN	2
17	Gear, 40T	FU5-0454-000CN	1
19	Gear, 29T	FU5-2399-000CN	1
20	Pulley, 20T	FU5-3086-000CN	2
21	Screw, RS stepped, M3	FU9-9059-000CN	8
23	Cover, internal, lower (stapler/stacker only)	RC2-1351-000CN	1
27	Screw, RS, M3x8	XA9-1386-000CN	83
28	Ring, E	XD9-0136-000CN	10
29	Belt, timing, cogged	XF2-1607-860CN	1
30	Belt, timing	XF2-1608-840CN	1
31	Belt, timing, cogged	XF9-0748-000CN	1
33	Upper-cover lock assembly	4G3-0210-000CN	1
34	Screw, RS, M4x8 (booklet-maker only)	XA9-0732-000CN	18
35	Stack-ejection motor assembly	4G3-0769-000CN	1
36	Cable, solenoid	FG3-2892-000CN	1
37	Shutter H.P.-sensor assembly	FM2-1401-000CN	1
38	Upper-crossmember assembly	RM1-4180-000CN	1
42	Press-motor assembly	FM2-1409-000CN	1
43	Sensor/switch assembly	FM2-1417-000CN	1
44	Swing-press shaft assembly	FM2-1423-000CN	1
46	Area-sensor flag assembly	RM1-4107-000CN	1
47	Caster, universal	RC2-1315-000CN	4
48	Screw, with washer, M5x12	XA9-0912-000CN	12
49	Inner-cover assembly	RM1-4123-000CN	1
51	Cable-mount lattice assembly	RM1-4128-000CN	1
59	Sheet, entrance-guide	FC5-5542-000CN	2
60	Solenoid	FL2-0821-000CN	1
69	Pin, dowel	XD3-2200-102CN	1
70	Pin, dowel	XD3-2200-142CN	1
71	Ring, E	XD9-0136-000CN	5

www.drukparts.pl

Table 9-35 Finisher main body (stapler/stacker and booklet-maker) (continued)

Ref	Description	Part number	Qty
75	Entrance-sensor flag assembly	FM2-0718-000CN	1
79	Plate, hinge-stop (booklet-maker only)	4A3-4715-000CN	1
80	Knob (booklet-maker only)	FB3-7881-000CN	1
86	Cover, internal, lower (booklet-maker only)	RL1-1477-000CN	1
87	Plate, grounding (booklet-maker only)	4A3-1955-000CN	1
88	Clutch, electromagnetic	4H3-0370-000CN	2
91	Plate, grounding (booklet-maker only)	RC2-1536-000CN	1
92	Flexible-cable mount assembly	FM2-0720-000CN	1
501	Pin	XD3-2200-100CN	4
503	Screw, TP, M3x6 (booklet-maker only)	XB6-7300-607CN	1
A51	Photo interrupter, TLP1242	WG8-3503-000CN	1

NOTE: Only highlighted parts are orderable.

www.drukparts.pl

Figure 9-45 Output bin 1 (stack upper-tray assembly) (1 of 2) (stapler/stacker)

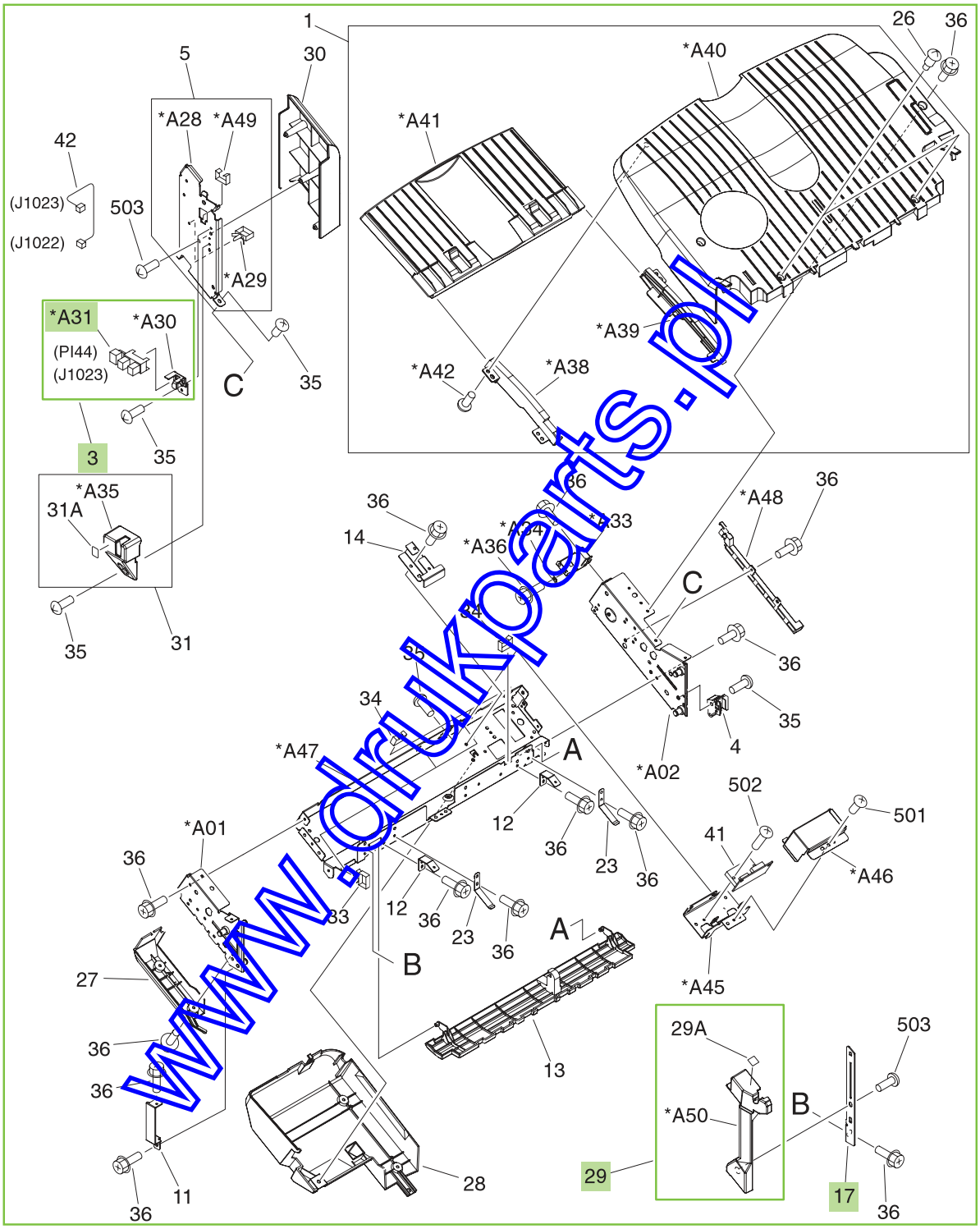

www.drukparts.pl

Figure 9-46 Output bin 1 (stack upper-tray assembly) (2 of 2) (stapler/stacker)

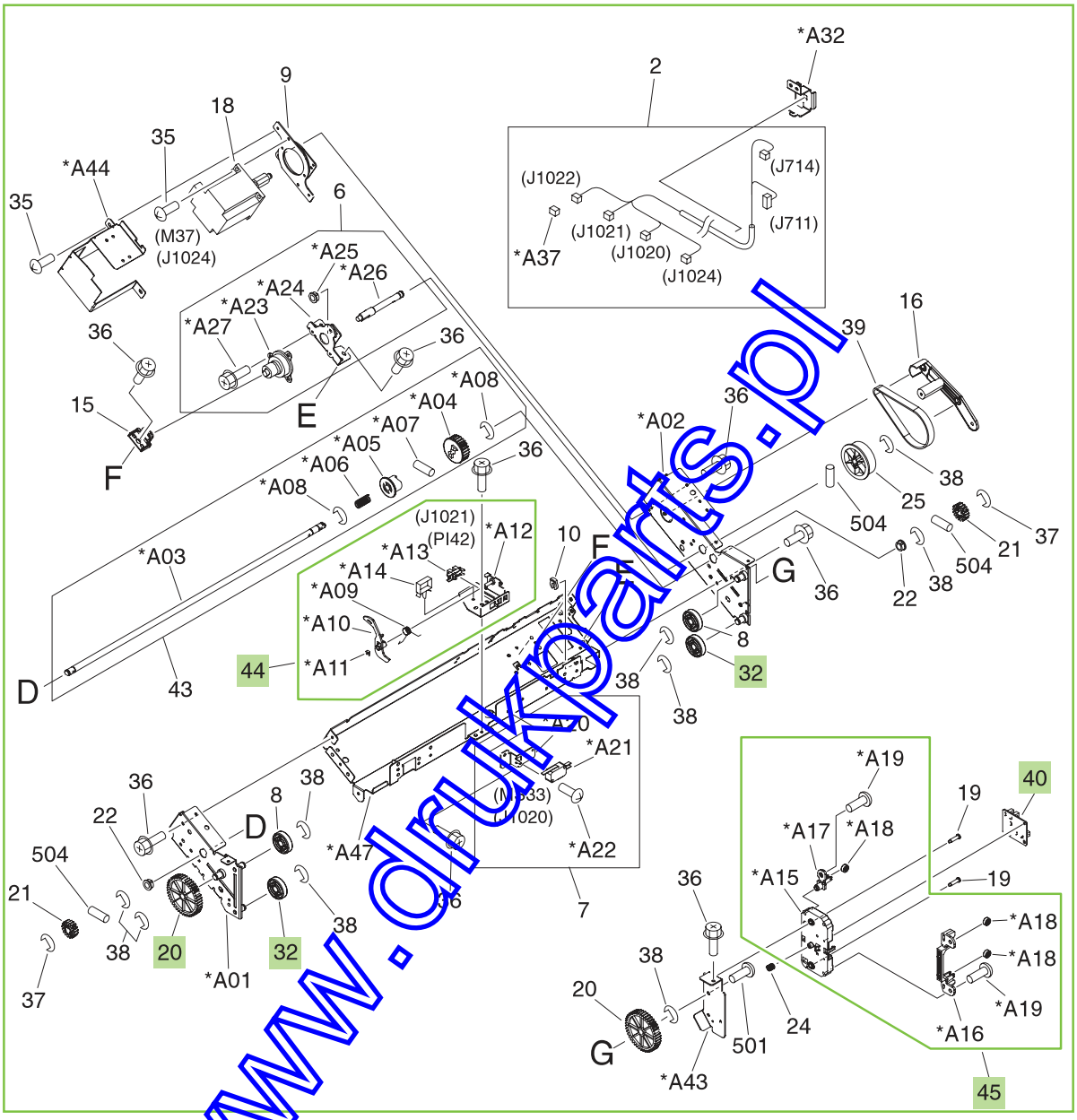

www.drukparts.pl

Table 9-36 Output bin 1 (stack upper-tray assembly) (stapler/stacker)

Ref	Description	Part number	Qty
All	Stack upper-tray assembly	RM1-4101-000CN	1
3	Option-sensor assembly	FM2-1708-000CN	1
17	Plate, option-tray, front	FC5-6978-000CN	1
20	Gear, 44T	FU5-0435-000CN	2
29	Cover, option-tray, front	RL1-2210-000CN	1
32	Roller, tray-guide	RU5-6035-000CN	2
40	Area-sensor PCA assembly	4G1-1498-000CN	1
44	Paper-sensor assembly	FM2-0707-000CN	1
45	Area-sensor holder assembly	FM2-0709-000CN	1
A31	Photo interrupter, TLP1242	WG8-5593-000CN	1

NOTE: Only highlighted parts are orderable.

www.drukparts.pl

Figure 9-47 Output bin 1 (stack upper-tray assembly) (1 of 2) (booklet-maker)

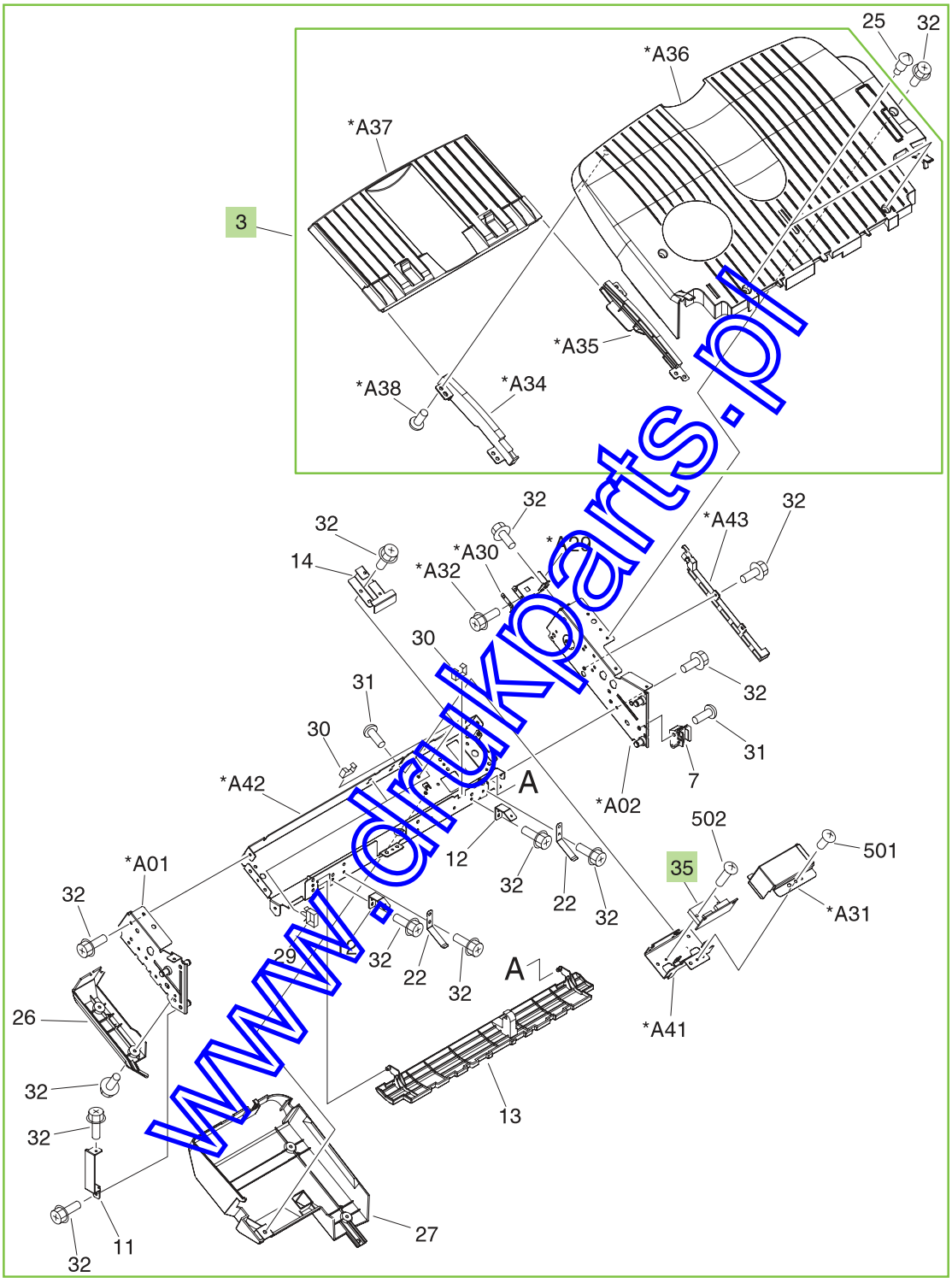

www.drukparts.pl

www.drukparts.pl

Figure 9-48 Output bin 1 (stack upper-tray assembly) (2 of 2) (booklet-maker)

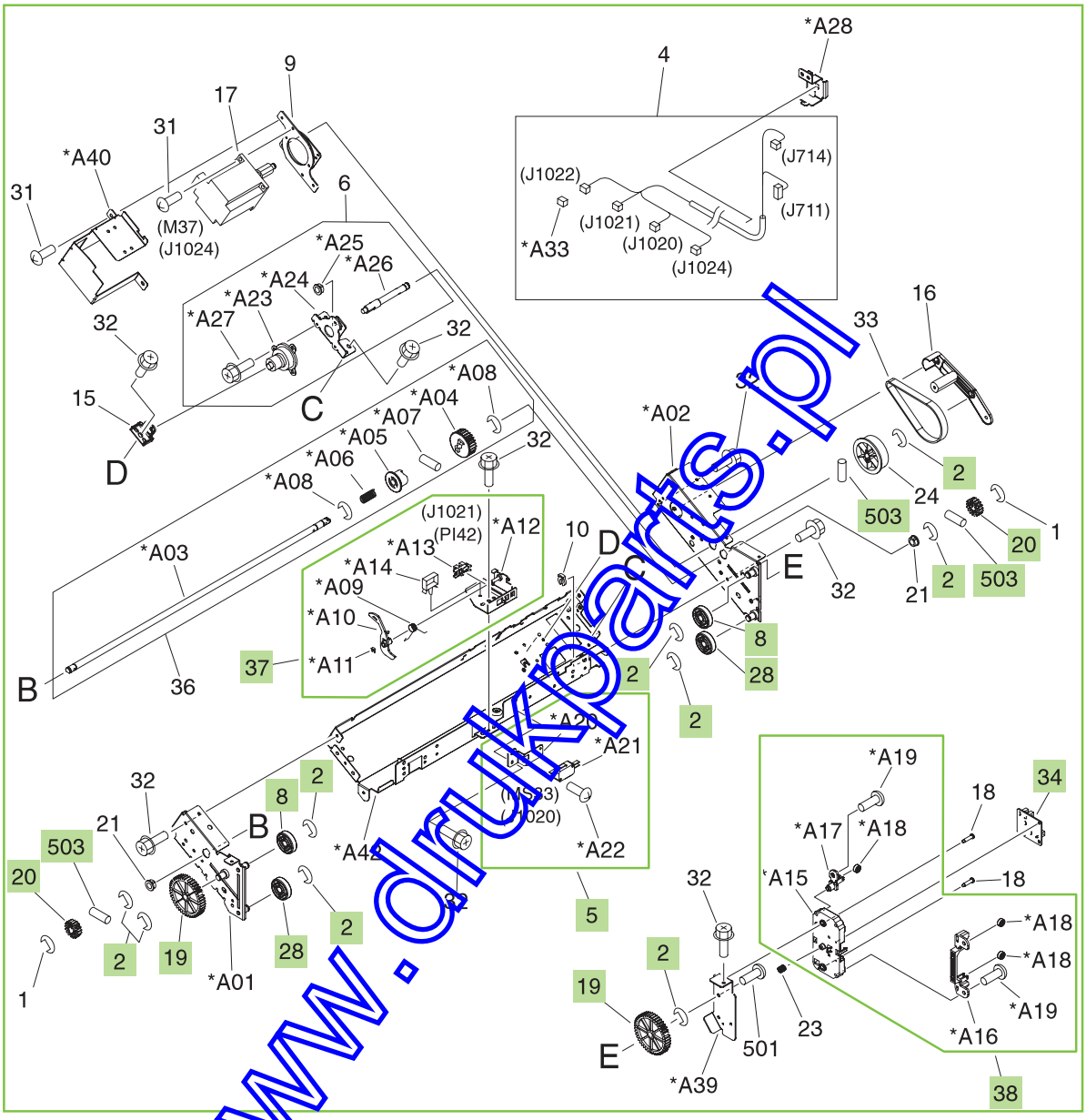

www.dukparts.pl

Table 9-37 Output bin 1 (stack upper-tray assembly) (booklet-maker)

Ref	Description	Part number	Qty
All	Stack upper-tray assembly	RM1-4102-000CN	1
2	Ring, E	XD9-0137-000CN	9
3	Stack-tray assembly	RM1-4104-000CN	1
5	Approach-switch assembly	FM2-0710-000CN	1
8	Roller, tray-guide	FC5-4221-000CN	2
19	Gear, 44T	FU5-0435-000CN	2
20	Gear, 17T	FU5-0457-000CN	2
28	Roller, tray-guide	RU5-6035-000CN	2
34	Area-sensor PCA assembly	4G1-1498-000CN	1
35	Tray-driver PCA assembly	FG3-2887-000CN	1
37	Paper-sensor assembly	FM2-0707-000CN	1
38	Area-sensor holder assembly	FM2-0709-000CN	1
503	Pin, dowel	XD3-2300-142CN	3

NOTE: Only highlighted parts are orderable.

www.drukparts.pl

Figure 9-49 Output bin 2 (stack lower-tray assembly) (1 of 2) (stapler/stacker and booklet-maker)

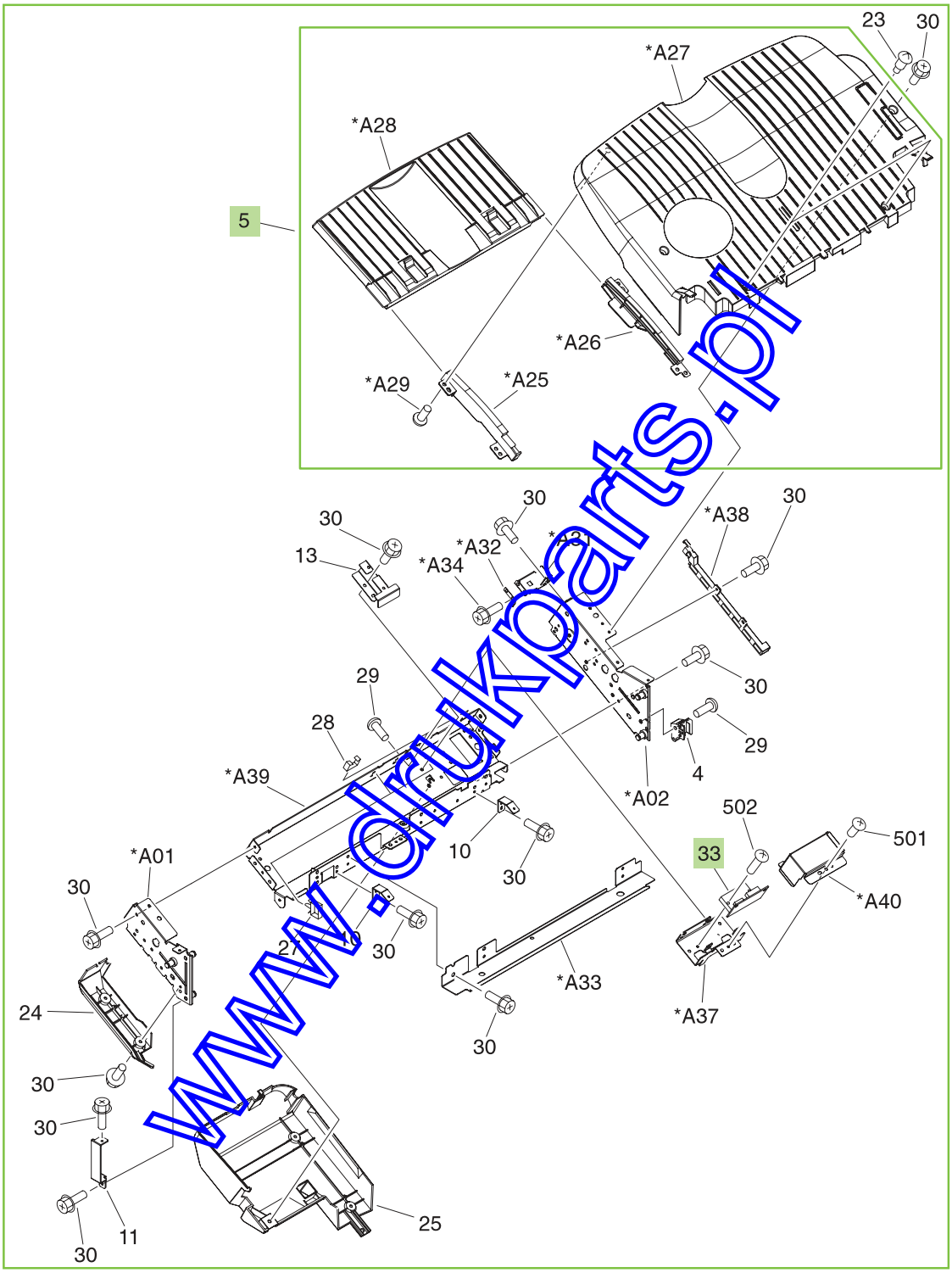

www.drukparts.pl

www.drukparts.pl

Figure 9-50 Output bin 2 (stack lower-tray assembly) (2 of 2) (stapler/stacker and booklet-maker)

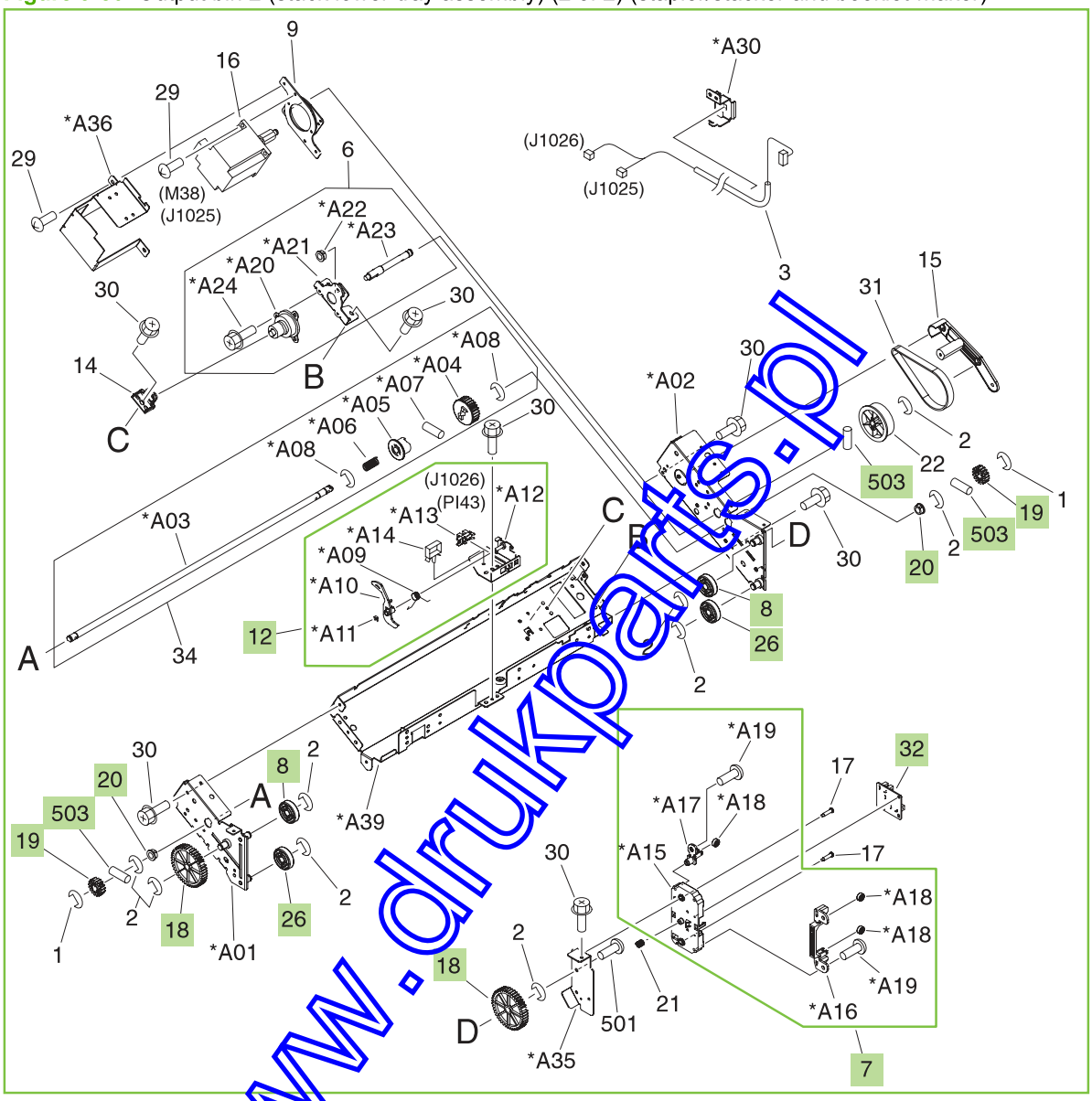

www.drukparts.pl

Table 9-38 Output bin 2 (stack lower-tray assembly) (stapler/stacker and booklet-maker)

Ref	Description	Part number	Qty
All	Stack lower-tray assembly	RM1-4105-000CN	1
5	Stack-tray assembly	RM1-4104-000CN	1
7	Area-sensor holder assembly	FM2-0709-000CN	1
8	Roller, tray-guide	FC5-4221-000CN	2
12	Paper-sensor assembly	FM2-0707-000CN	1
18	Gear, 44T	FU5-0435-000CN	2
19	Gear, 17T	FU5-0457-000CN	2
20	Bushing	FU5-1169-000CN	2
26	Roller, tray-guide	RU5-6035-000CN	2
32	Area-sensor PCA assembly	4G1-1498-000CN	1
33	Tray-driver PCA assembly	FG3-2887-000CN	1
503	Pin, dowel	XD3-2300-142CN	3

NOTE: Only highlighted parts are orderable.

www.drukparts.pl

Figure 9-51 Top output bin (stack sub-tray assembly) (stapler/stacker)

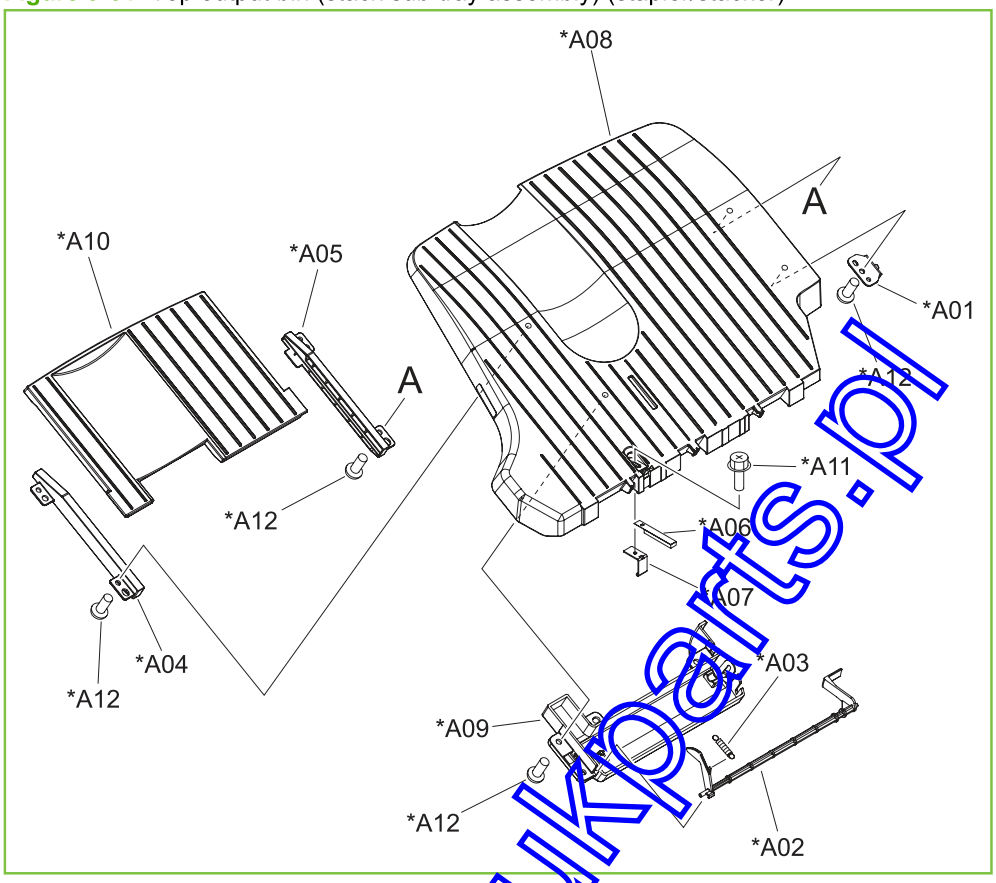

www.drukparts.pl

Table 9-39 Top output bin (stack sub-tray assembly) (stapler/stacker)

Ref	Description	Part number	Qty
All	Stack sub-tray assembly	RM1-4115-000CN	1

NOTE: Only highlighted parts are orderable.

Figure 9-52 Operation-tray assembly (1 of 2) (stapler/stacker and booklet-maker)

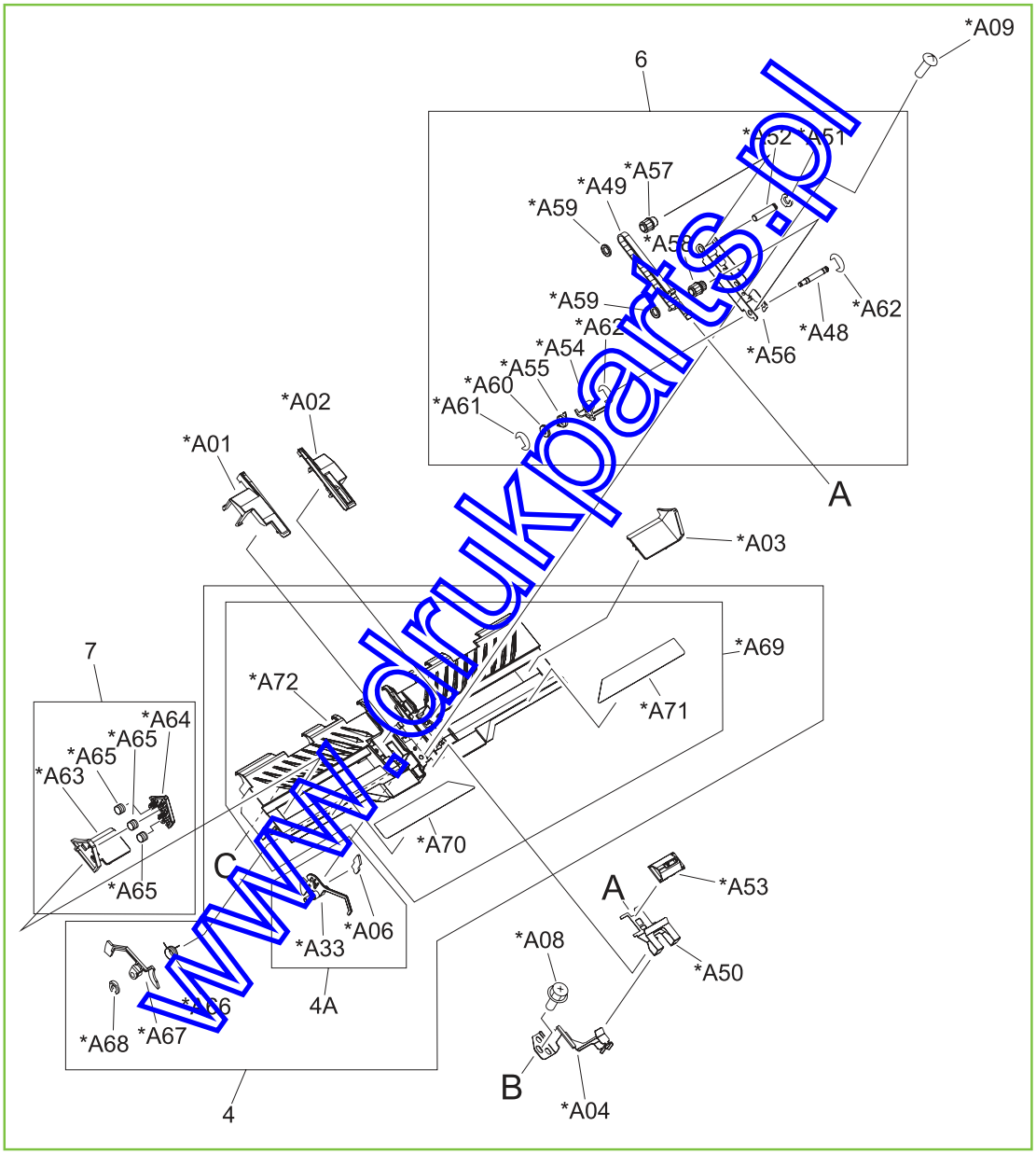

www.drukparts.pl

Figure 9-53 Operation-tray assembly (2 of 2) (stapler/stacker and booklet-maker)

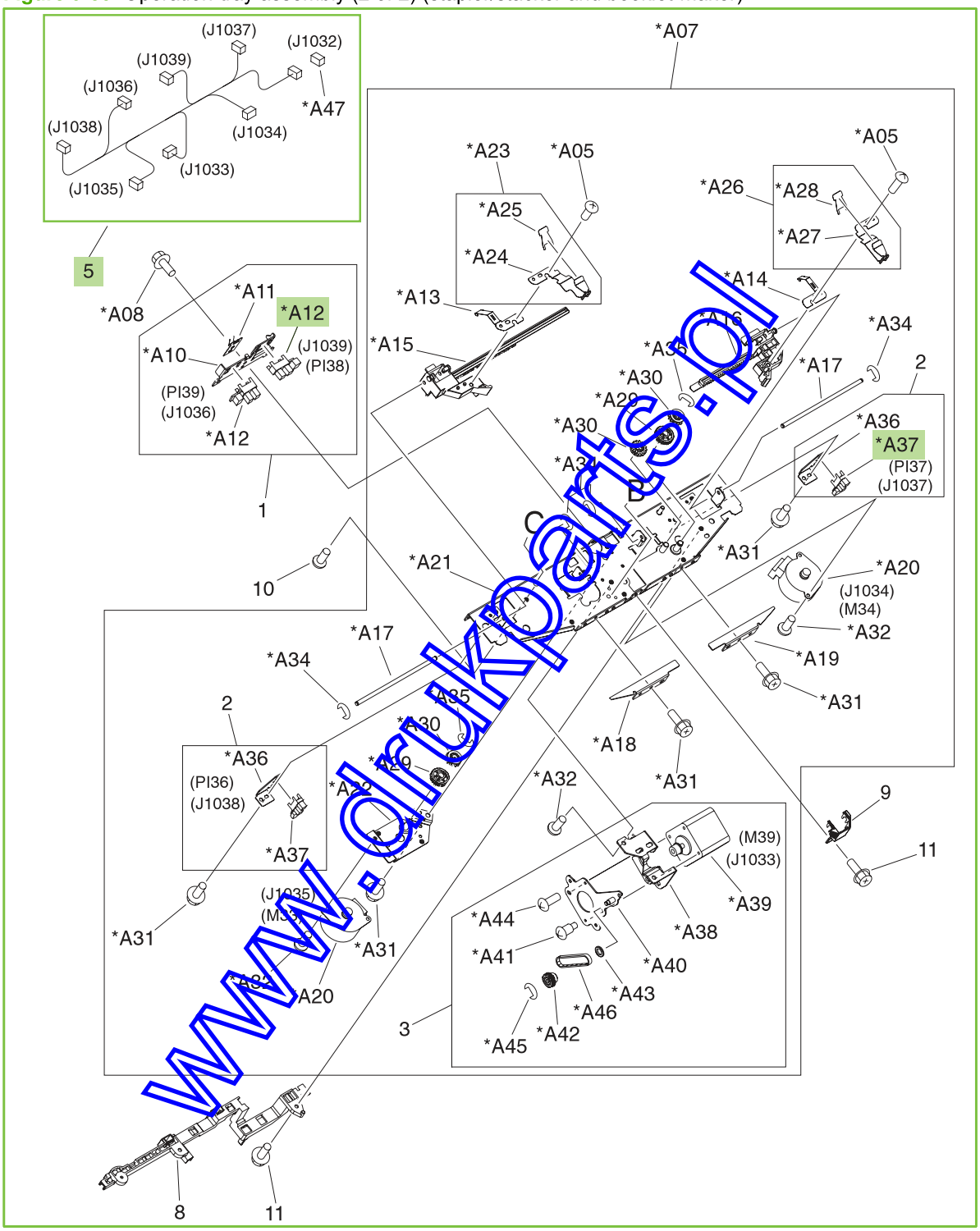

www.dlkparts.pl

Table 9-40 Operation-tray assembly (stapler/stacker and booklet-maker)

Ref	Description	Part number	Qty
All	Operation-tray assembly	RM1-4125-000CN	1
5	Cable, operation-tray	FG3-2903-000CN	1
A12	Photo interrupter, TLP1242	WG8-5593-000CN	2
A37	Photo interrupter, TLP1242	WG8-5593-000CN	1

NOTE: Only highlighted parts are orderable.

www.drukparts.pl

Figure 9-54 Paper-feeder motor assembly (stapler/stacker and booklet-maker)

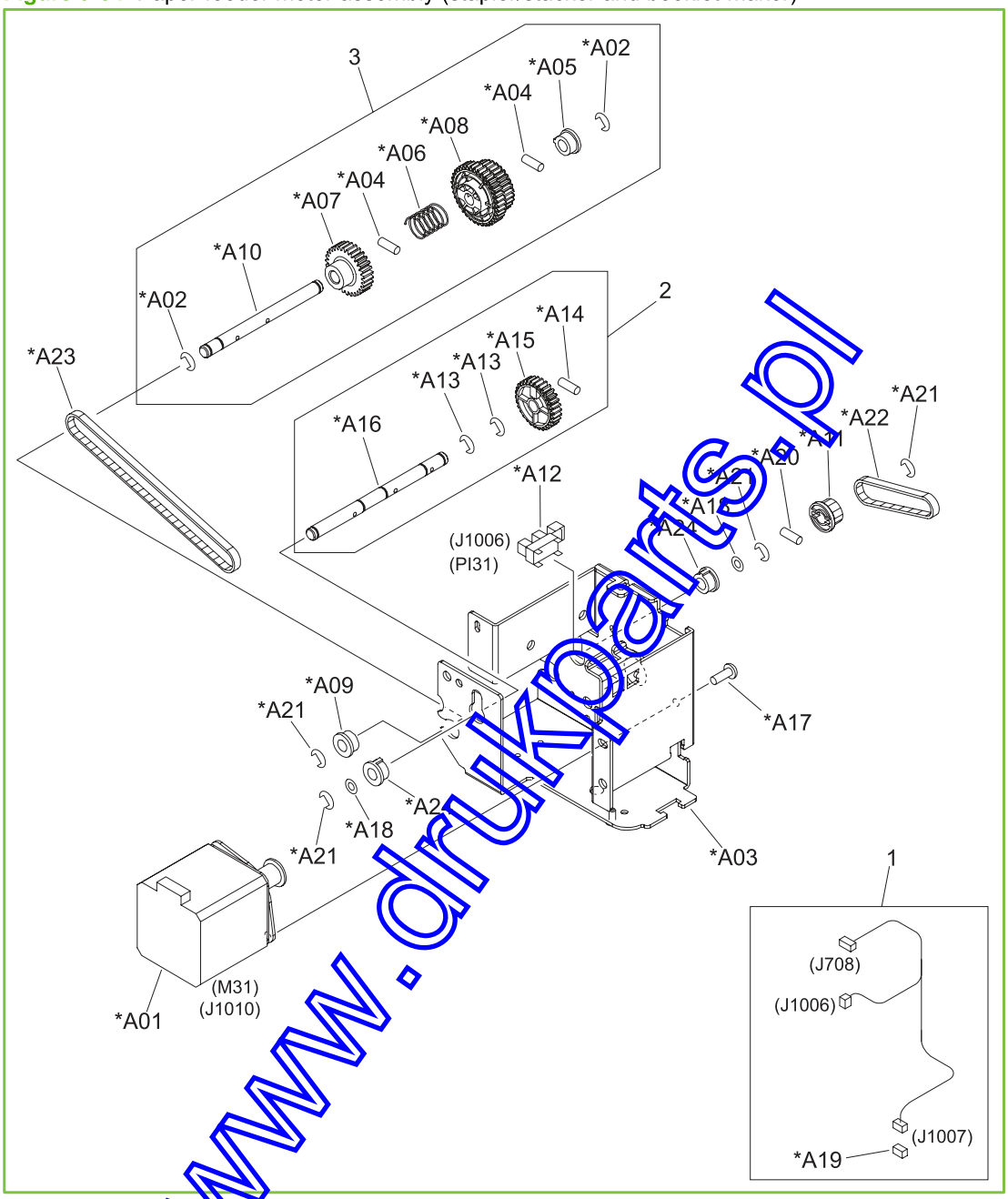

www.drukparts.pl

Table 9-41 Paper-feeder motor assembly (stapler/stacker and booklet-maker)

Ref	Description	Part number	Qty
All	Paper-feeder motor assembly	RM1-4175-000CN	1

NOTE: Only highlighted parts are orderable.

www.drukparts.pl

Figure 9-55 Return-roller assembly (stapler/stacker and booklet-maker)

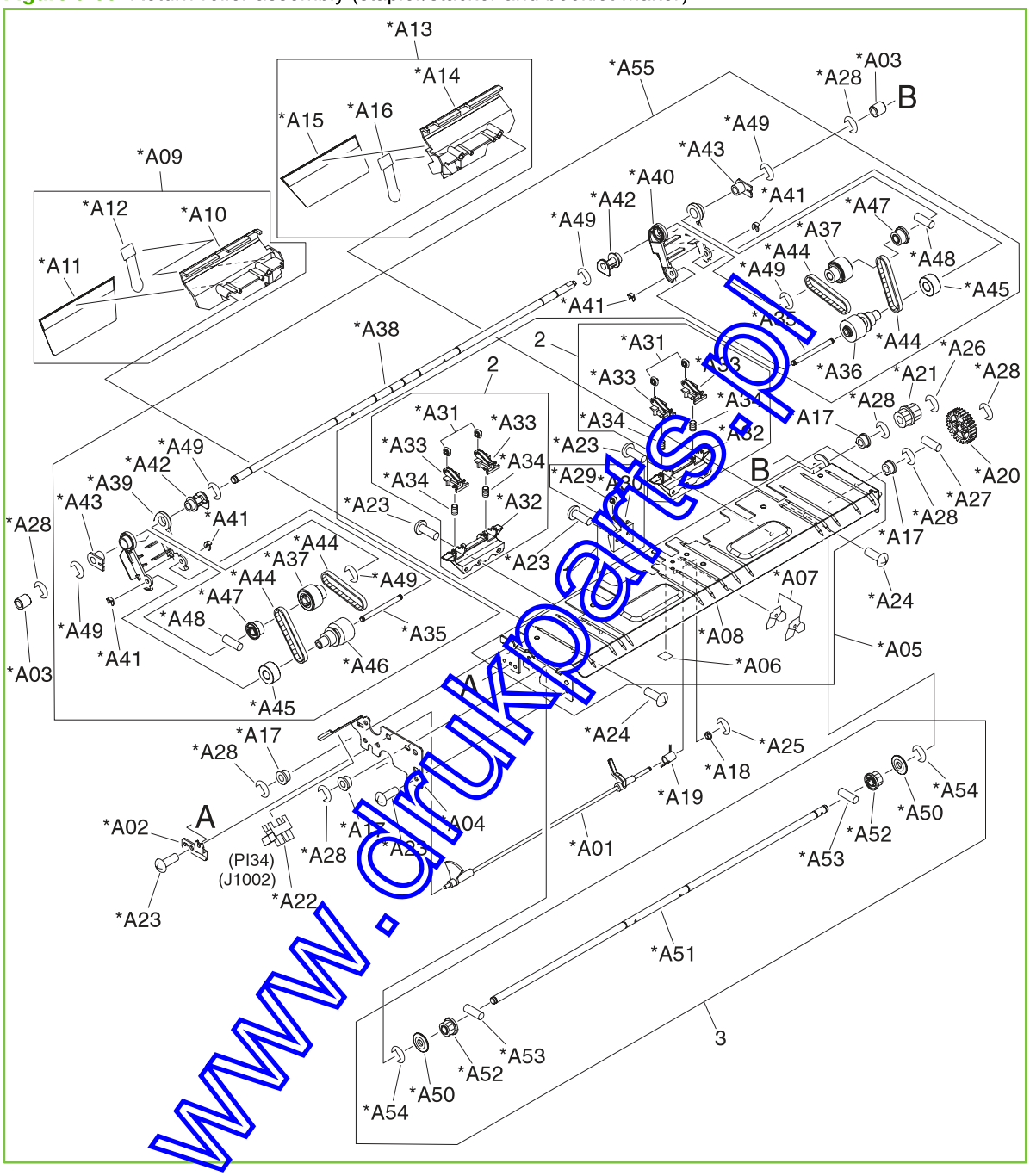

www.drukarki.pl

Table 9-42 Return-roller assembly (stapler/stacker and booklet-maker)

Ref	Description	Part number	Qty
All	Return-roller assembly	FM2-0725-090CN	1

NOTE: Only highlighted parts are orderable.

www.drukparts.pl

Figure 9-56 Pressure-roller assembly (stapler/stacker and booklet-maker)

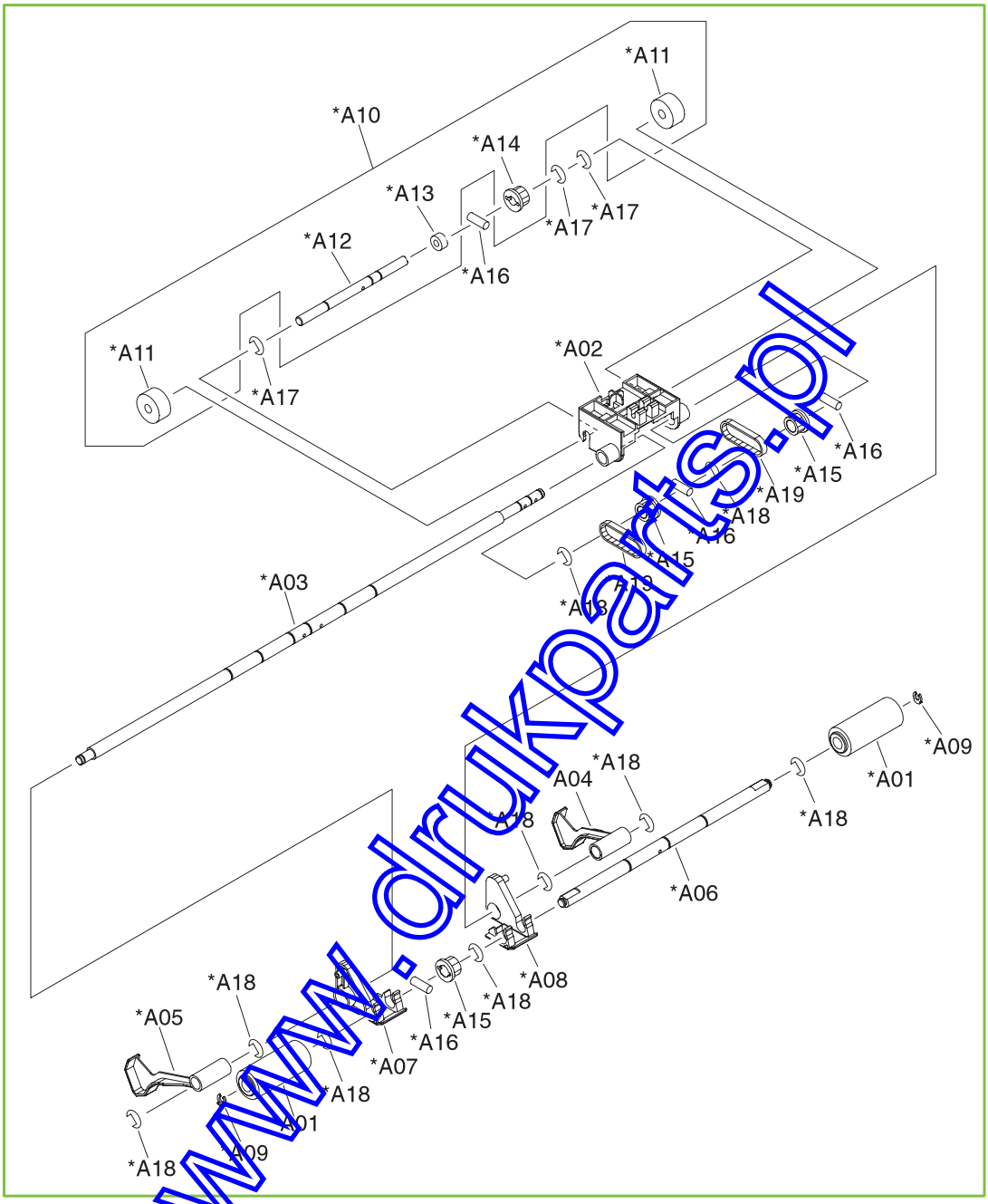

www.drukparts.pl

Table 9-43 Pressure-roller assembly (stapler/stacker and booklet-maker)

Ref	Description	Part number	Qty
All	Pressure-roller assembly	FM2-0730-000CN	1

NOTE: Only highlighted parts are orderable.

www.drukparts.pl

Figure 9-57 Swing-guide assembly (stapler/stacker and booklet-maker)

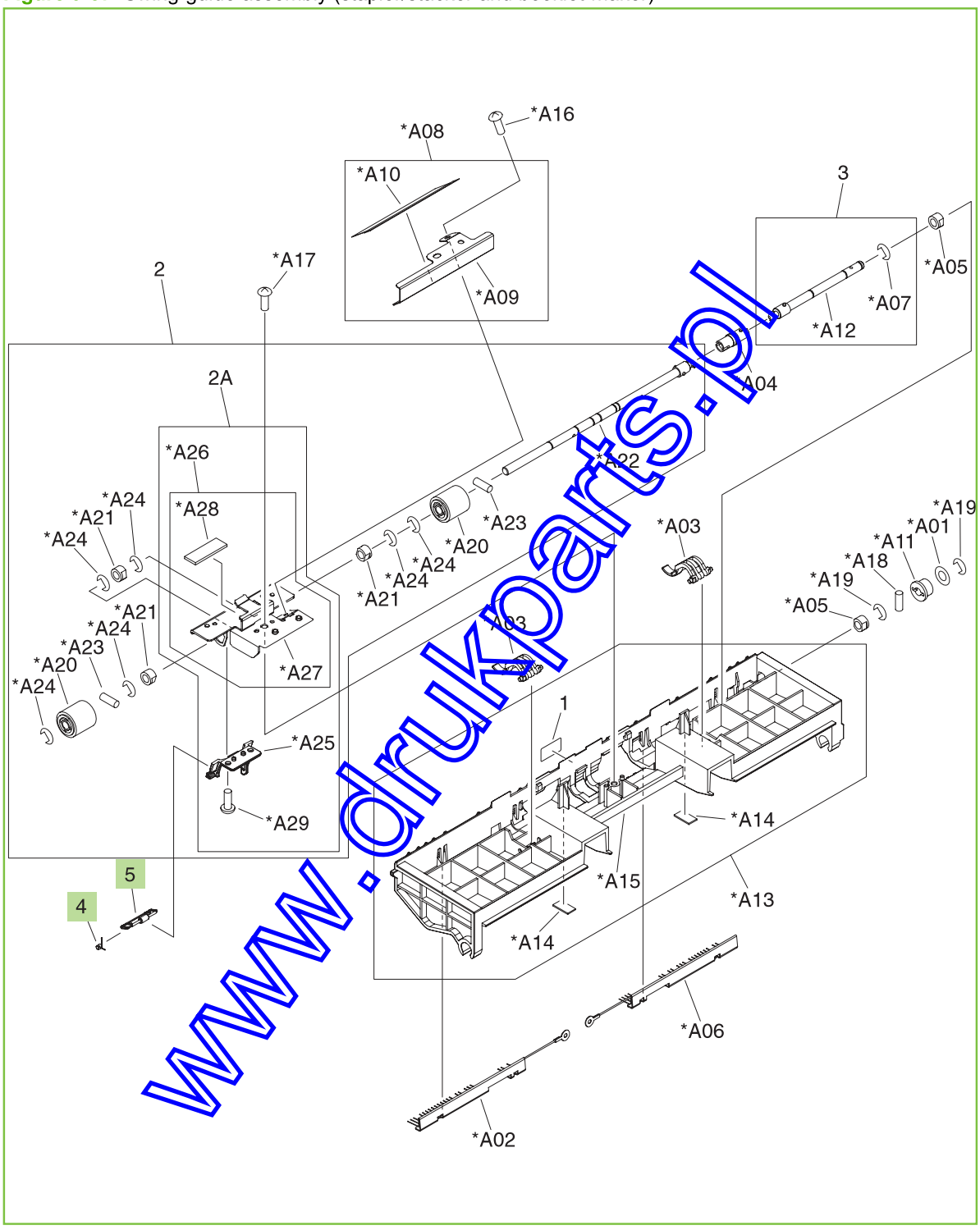

www.drukparts.pl

Table 9-44 Swing-guide assembly (stapler/stacker and booklet-maker)

Ref	Description	Part number	Qty
All	Swing-guide assembly	RM1-4108-000CN	1
4	Spring, torsion	FC5-6857-000CN	1
5	Arm, paper-delivery gate	RC2-1293-000CN	1

NOTE: Only highlighted parts are orderable.

www.drukparts.pl

Figure 9-58 Entrance upper-guide assembly (stapler/stacker and booklet-maker)

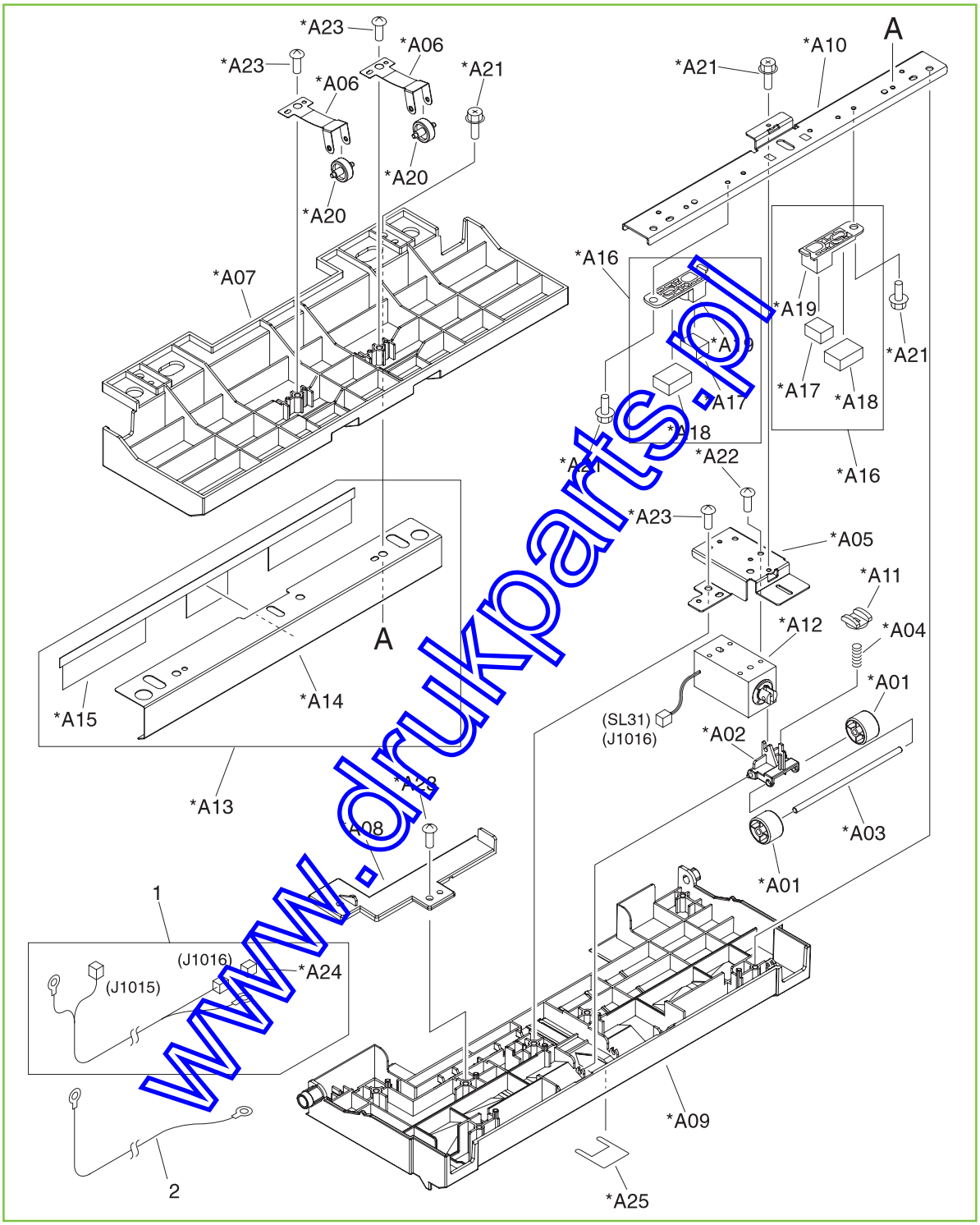

www.drukparts.pl

Table 9-45 Entrance upper-guide assembly (stapler/stacker and booklet-maker)

Ref	Description	Part number	Qty
All	Entrance upper-guide assembly	RM1-4172-000CN	1

NOTE: Only highlighted parts are orderable.

www.drukparts.pl

Figure 9-59 Staple assembly (stapler/stacker and booklet-maker)

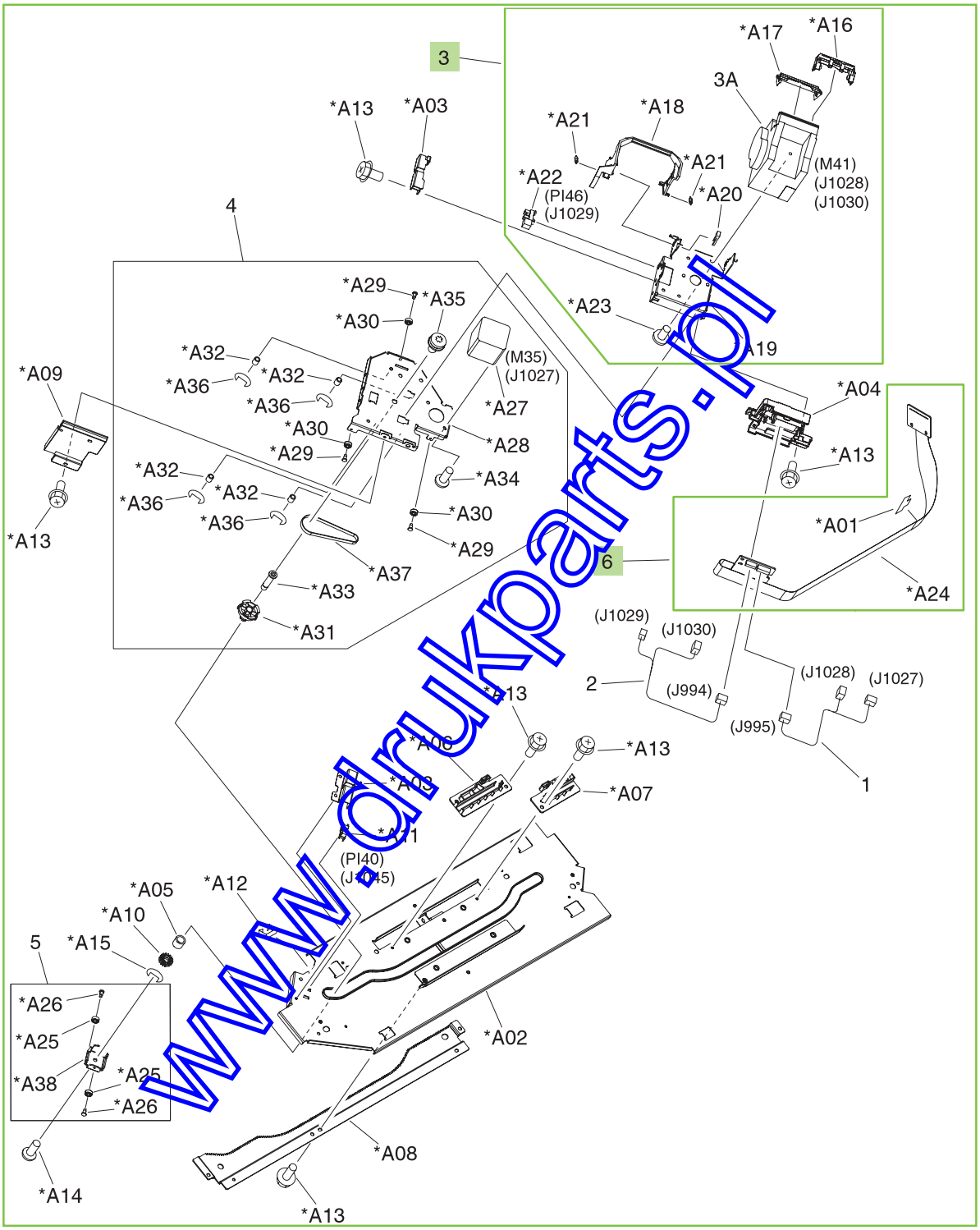

www.drukparts.pl

Table 9-46 Staple assembly (stapler/stacker and booklet-maker)

Ref	Description	Part number	Qty
All	Staple assembly	FM2-0721-000CN	1
3	Stapler sub-assembly	FM2-0722-000CN	1
	5000-staple replacement cartridge	C8091-67901	1
	2000-staple cartridge (for booklet making)	CC383-67901	1
6	Cable, staple-connecting assembly	4G3-1777-000CN	1

NOTE: Only highlighted parts are orderable.

www.drukparts.pl

Figure 9-60 Saddle assembly (1 of 4) (booklet-maker)

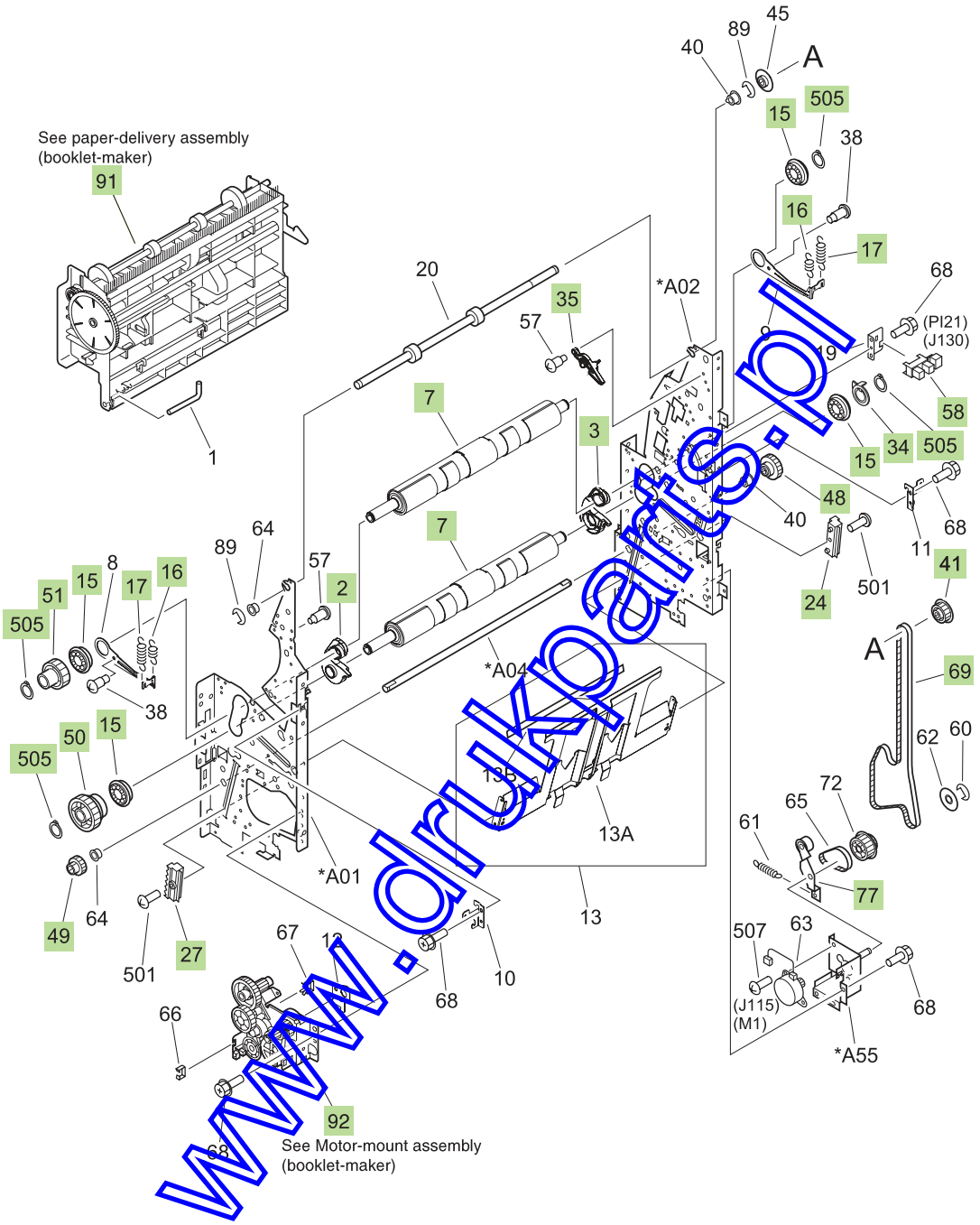

www.drukoarts.pl

Figure 9-61 Saddle assembly (2 of 4) (booklet-maker)

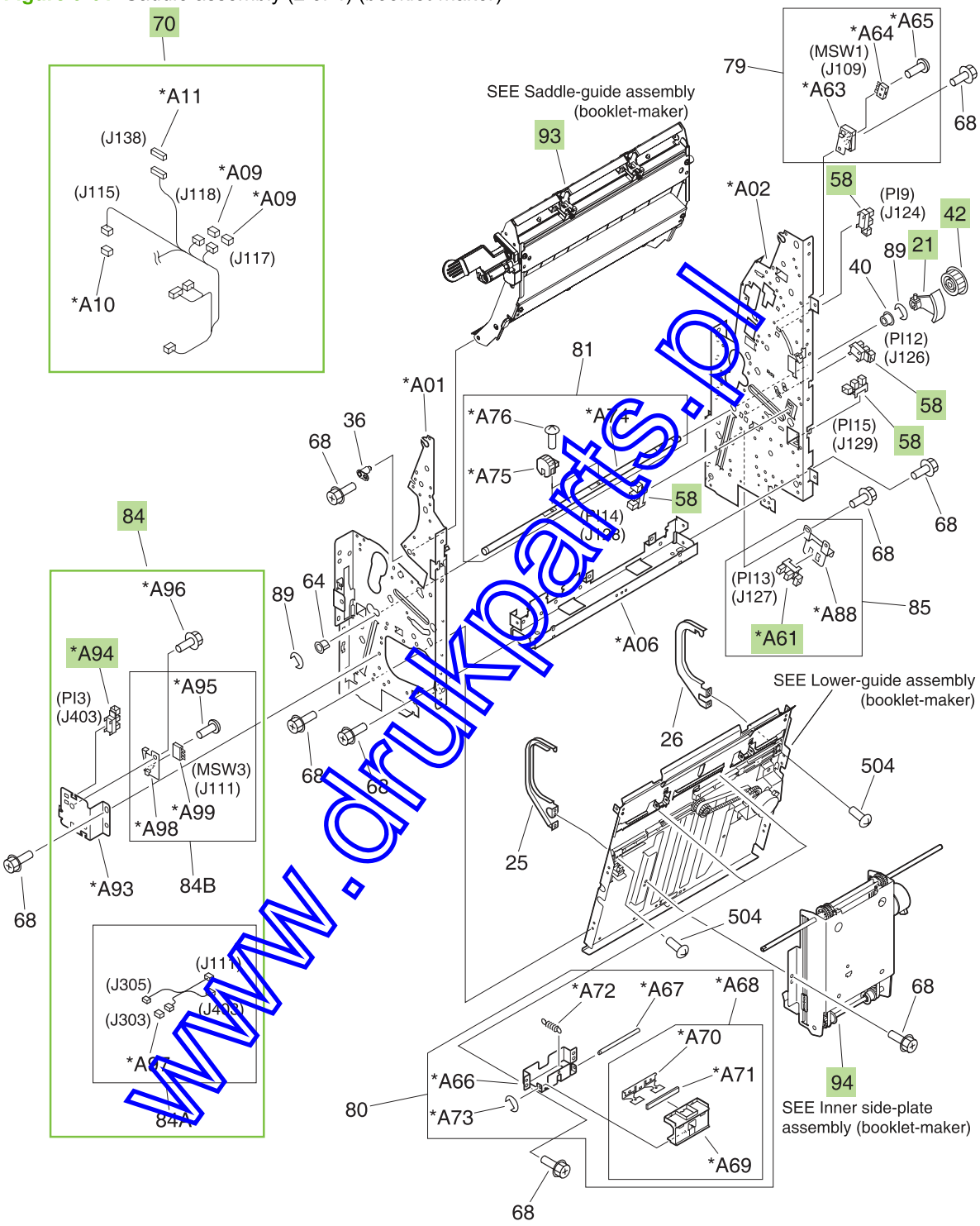

www.drukparts.pl

Figure 9-62 Saddle assembly (3 of 4) (booklet-maker)

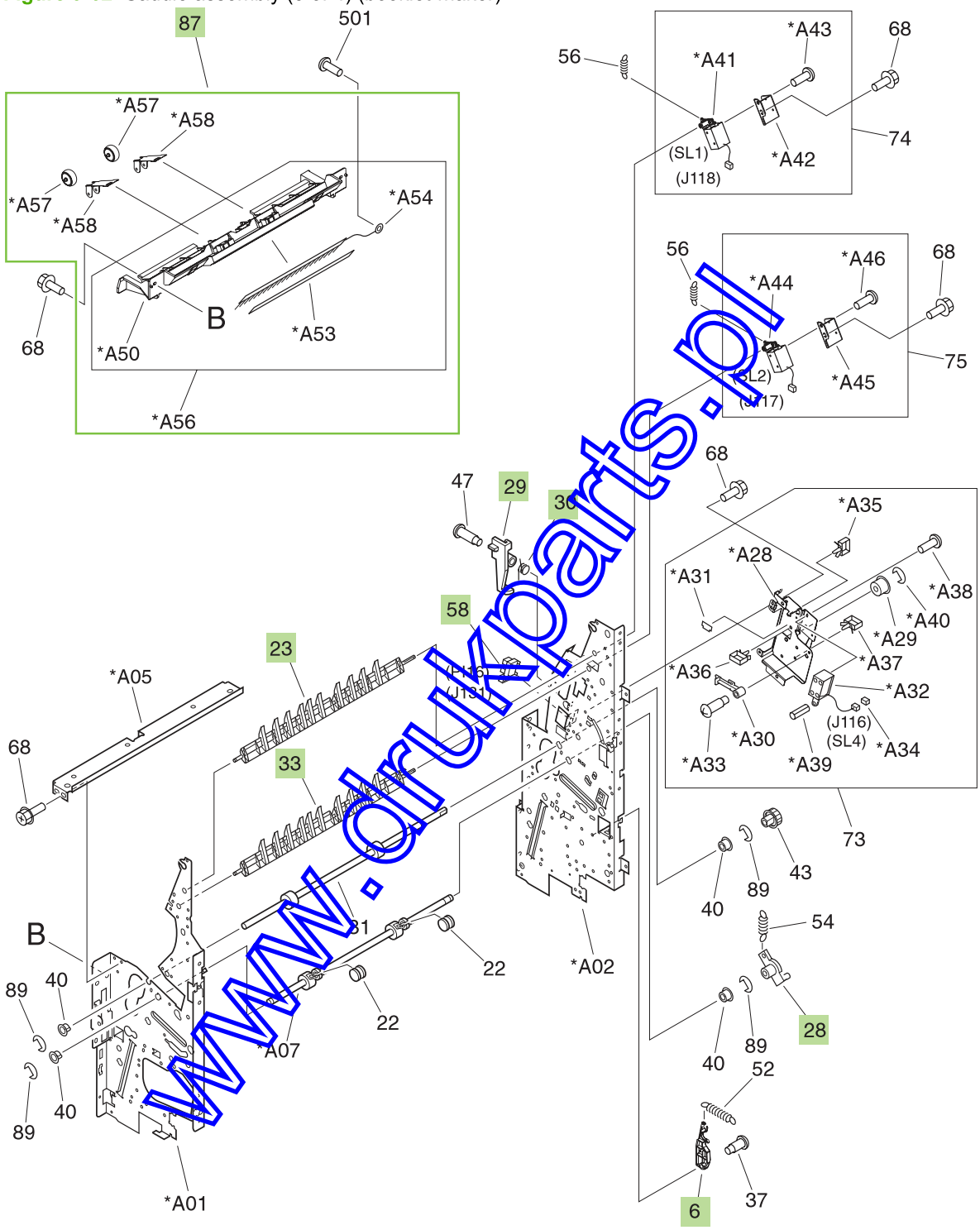

www.drukparts.pl

www.drukparts.pl

Figure 9-63 Saddle assembly (4 of 4) (booklet-maker)

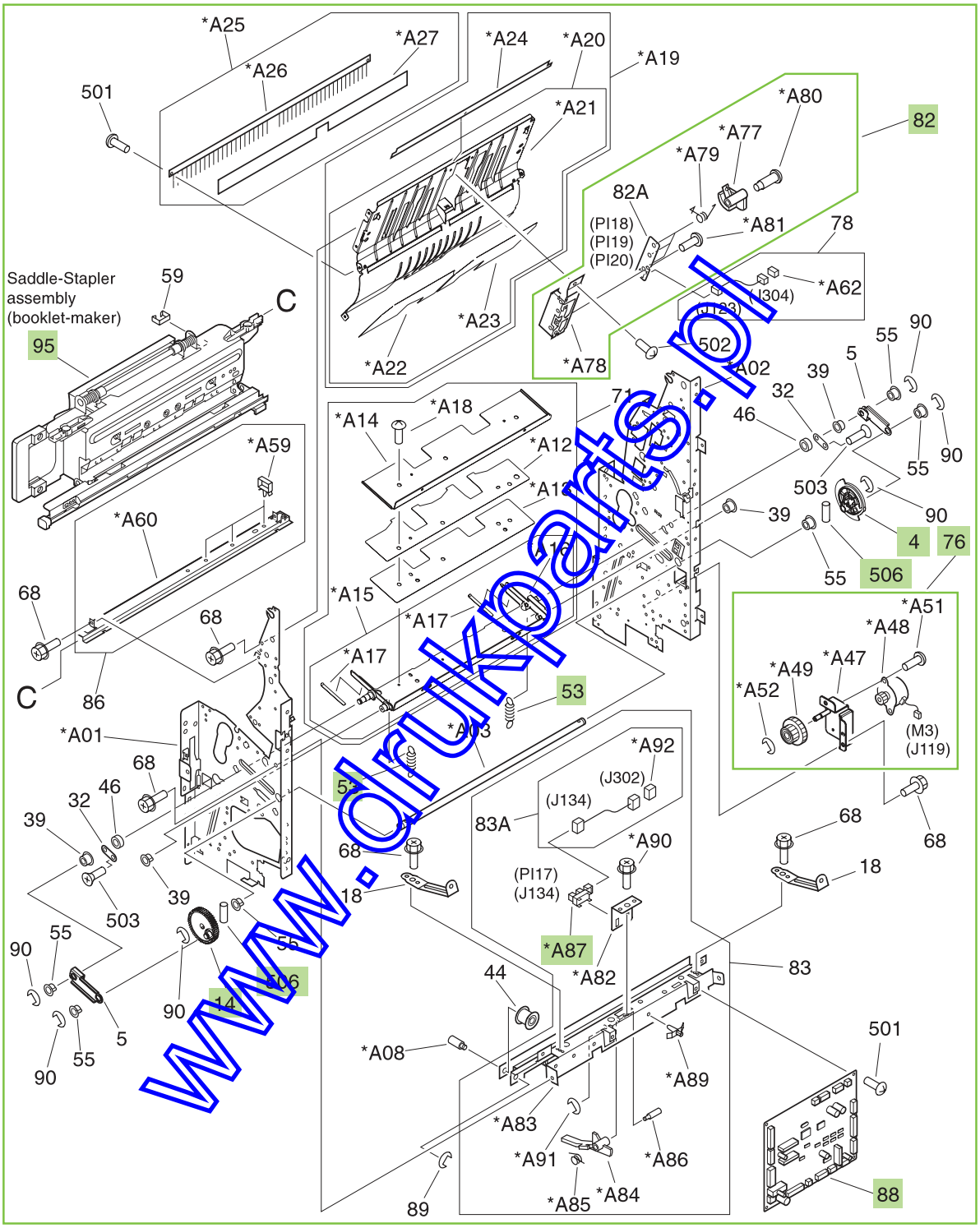

www.drukparts.pl

Table 9-47 Saddle assembly (booklet-maker)

Ref	Description	Part number	Qty
2	Arm, adjustment, front	4A3-1763-000CN	1
3	Arm, adjustment, rear	4A3-1764-000CN	1
4	Plate, rotation	4A3-1779-000CN	1
6	Lever, stopper	4A3-1782-000CN	1
7	Roller, folding	4A3-1783-000CN	2
14	Gear, 50T	4S3-0171-000CN	1
15	Bearing, ball, 6902ZZNR	4S3-1050-000CN	4
16	Spring, tension	4S3-2116-000CN	2
17	Spring, tension	4S3-2117-000CN	2
21	Flag, roller	FB3-7925-030CN	1
23	Deflector	FB3-7928-020CN	1
24	Rack, rear	FB3-7934-000CN	1
27	Rack, front	FB3-7967-000CN	1
28	Holder, roller, 2	FB3-7973-000CN	1
29	Flag, sensor	FB3-7979-000CN	1
30	Spring, torsion	FB3-7980-000CN	1
33	Deflector	FB5-2697-000CN	1
34	Flag, sensor	FB5-5937-020CN	1
35	Claw, latch, right	FC5-5021-000CN	1
41	Pulley, 30T	FS5-3576-000CN	1
42	Pulley, 39T	FS5-3577-000CN	1
48	Gear, 16T/33T	FS6-0822-000CN	1
49	Gear, 16T	FS6-0823-000CN	1
50	Gear, 16T/56T	FS6-0829-000CN	1
51	Gear, 16T	FS6-0830-000CN	1
53	Spring, tension	FS6-2582-000CN	2
58	Photo interrupter, JL P1242	WG8-5593-000CN	6
69	Belt, timing	XF2-3837-340CN	1
70	Cable, saddle-unit	4G1-2283-000CN	1
76	Guide-motor assembly	4G3-0725-000CN	1
77	Plate, tension	FF5-5805-040CN	1
82	Rear-end sensor assembly	FM2-0763-000CN	1
84	Delivery-switch mount assembly	FM2-1639-000CN	1
87	Upper delivery-guide assembly	RM1-4131-000CN	1

www.drukparts.pl

Table 9-47 Saddle assembly (booklet-maker) (continued)

Ref	Description	Part number	Qty
88	Saddle-controller PCA assembly	RM1-4140-000CN	1
91	Saddle paper-delivery assembly	RM1-4130-000CN	1
92	Motor-mount assembly	4G3-0670-000CN	1
93	Saddle-guide assembly	FM2-0756-000CN	1
94	Inner side-plate assembly	4G3-0671-000CN	1
95	Saddle-stapler assembly	RM1-4178-000CN	1
505	Ring, C, external	XD2-3100-152CN	4
506	Pin, dowel	XD3-2300-202CN	2
A61	Photo interrupter, TLP1242	WG8-5593-000CN	1
A87	Photo interrupter, TLP1242	WG8-5593-000CN	1
A94	Photo interrupter, TLP1242	WG8-5593-000CN	1

NOTE: Only highlighted parts are orderable.

www.drukparts.pl

www.drukparts.pl

Figure 9-64 Saddle-tray assembly (booklet-maker)

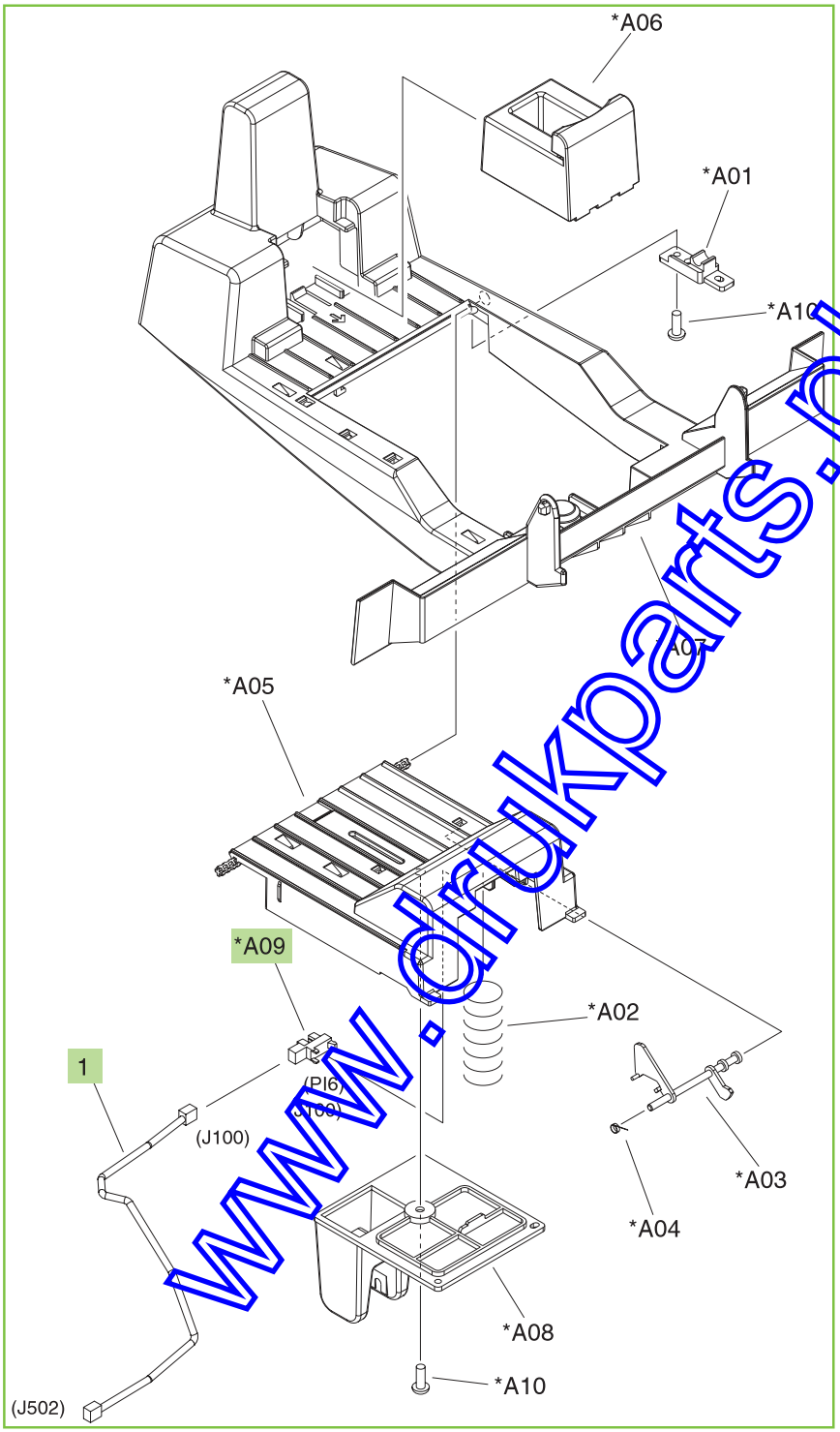

www.drukparts.pl

Table 9-48 Saddle-tray assembly (booklet-maker)

Ref	Description	Part number	Qty
All	Booklet-output bin (saddle-tray assembly)	RM1-4113-000CN	1
1	Cable, sensor	4G1-2285-000CN	1
A09	Photo interrupter, TLP1242	WG8-5593-000CN	1

NOTE: Only highlighted parts are orderable.

www.drukparts.pl

Figure 9-65 Saddle-guide assembly (booklet-maker)

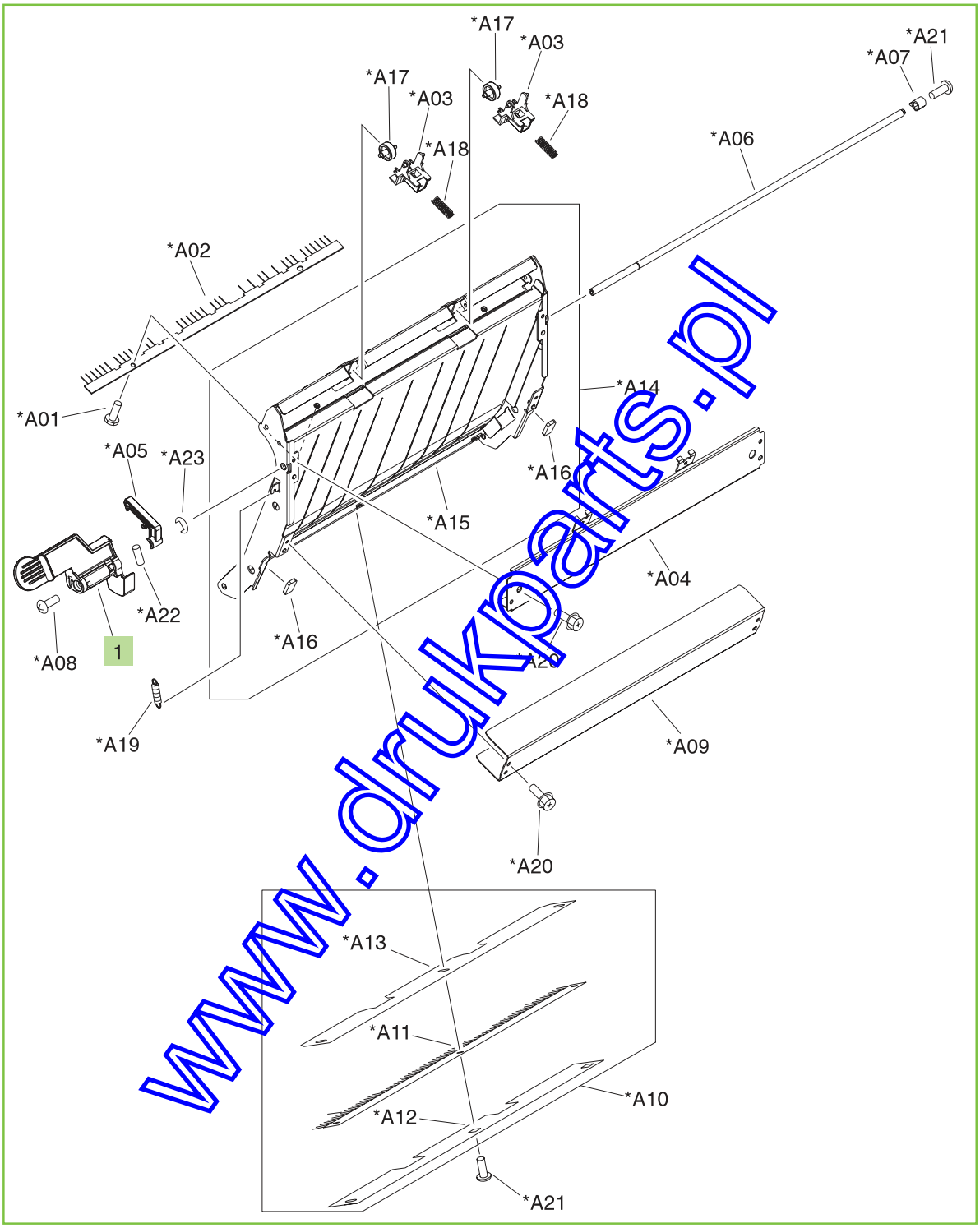

www.drukparts.pl

Table 9-49 Saddle-guide assembly (booklet-maker)

Ref	Description	Part number	Qty
All	Saddle-guide assembly	FM2-5024-000CN	1
1	Knob, latch	FC5-5024-000CN	1

NOTE: Only highlighted parts are orderable.

www.drukparts.pl

Figure 9-66 Saddle-stapler assembly (booklet-maker)

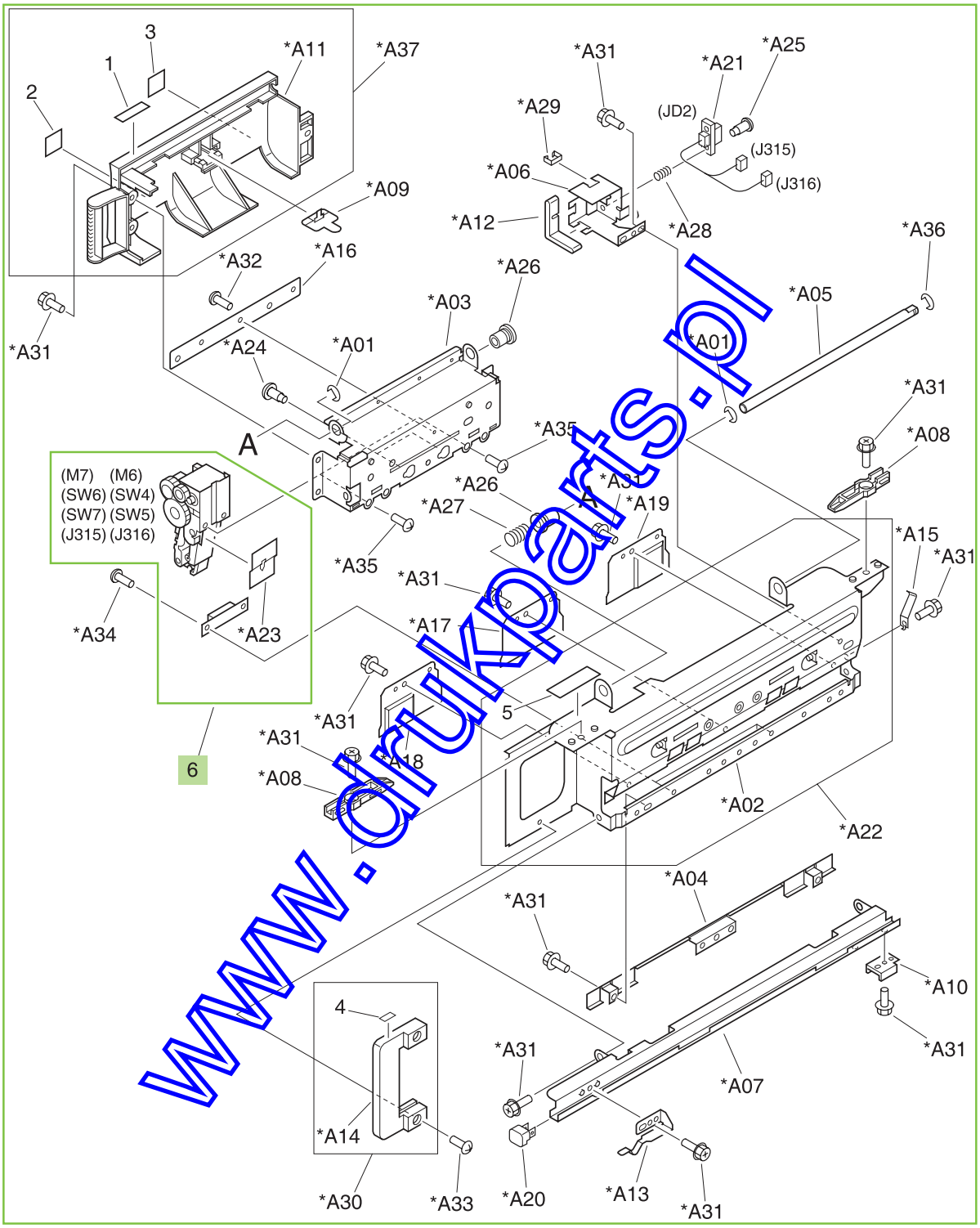

www.drukparts.pl

Table 9-50 Saddle-stapler assembly (booklet-maker)

Ref	Description	Part number	Qty
All	Saddle-stapler assembly	RM1-4178-000CN	1
6	Stapler unit	FL2-0846-000CN	2
	5000-staple replacement cartridge	C8091-67901	1
	2000-staple cartridge (for booklet making)	CC383-67901	1

NOTE: Only highlighted parts are orderable.

www.drukparts.pl

Figure 9-67 Saddle paper-feeder assembly (stapler/stacker)

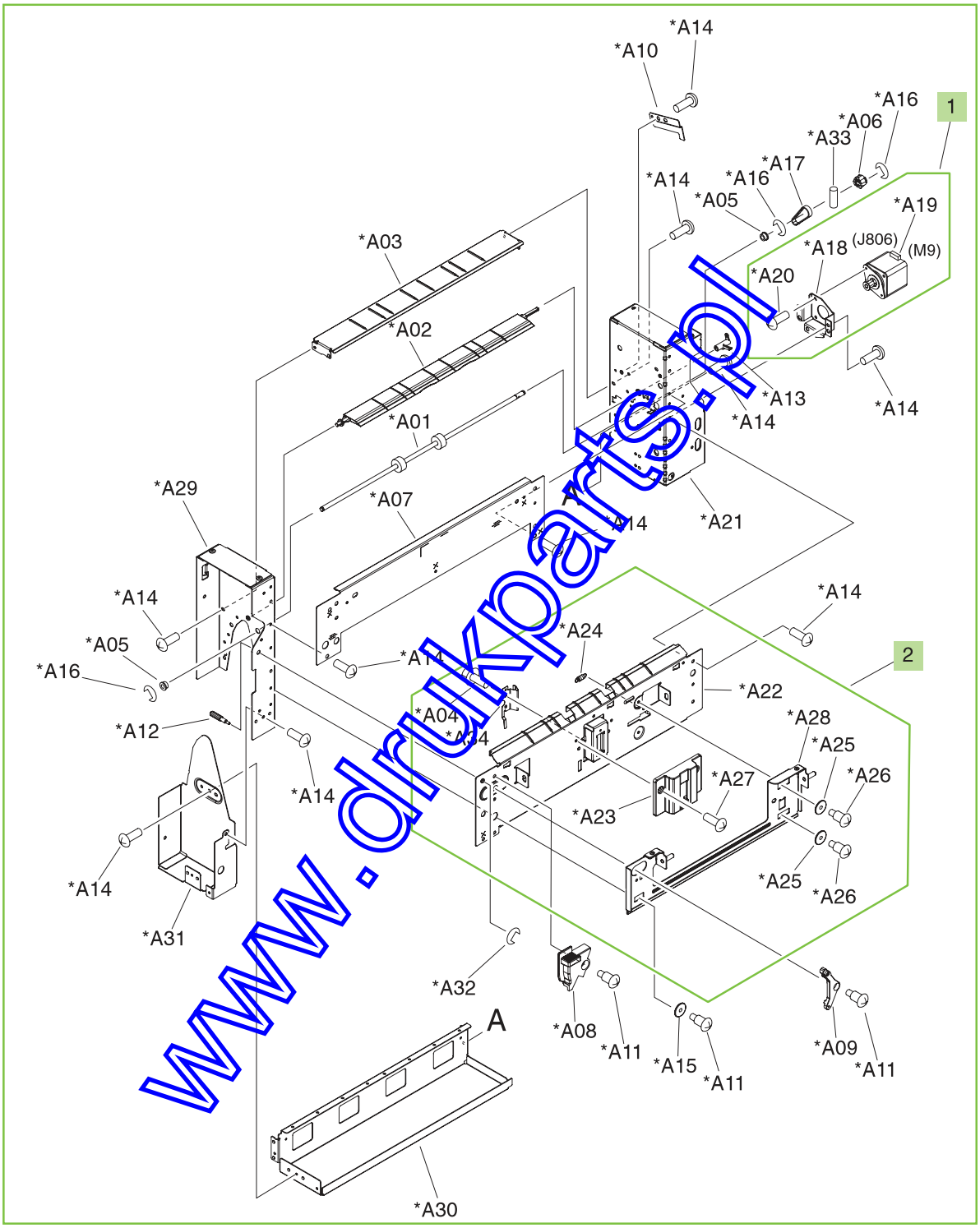

www.drukparts.pl

Table 9-51 Saddle paper-feeder assembly (stapler/stacker)

Ref	Description	Part number	Qty
All	Saddle paper-feeder assembly	RM1-4136-000CN	1
1	Saddle-motor assembly	FM2-0737-000CN	1
2	Entrance lower-guide assembly	RM1-4110-000CN	1

NOTE: Only highlighted parts are orderable.

www.drukparts.pl

Figure 9-68 Saddle paper-feeder assembly (booklet-maker)

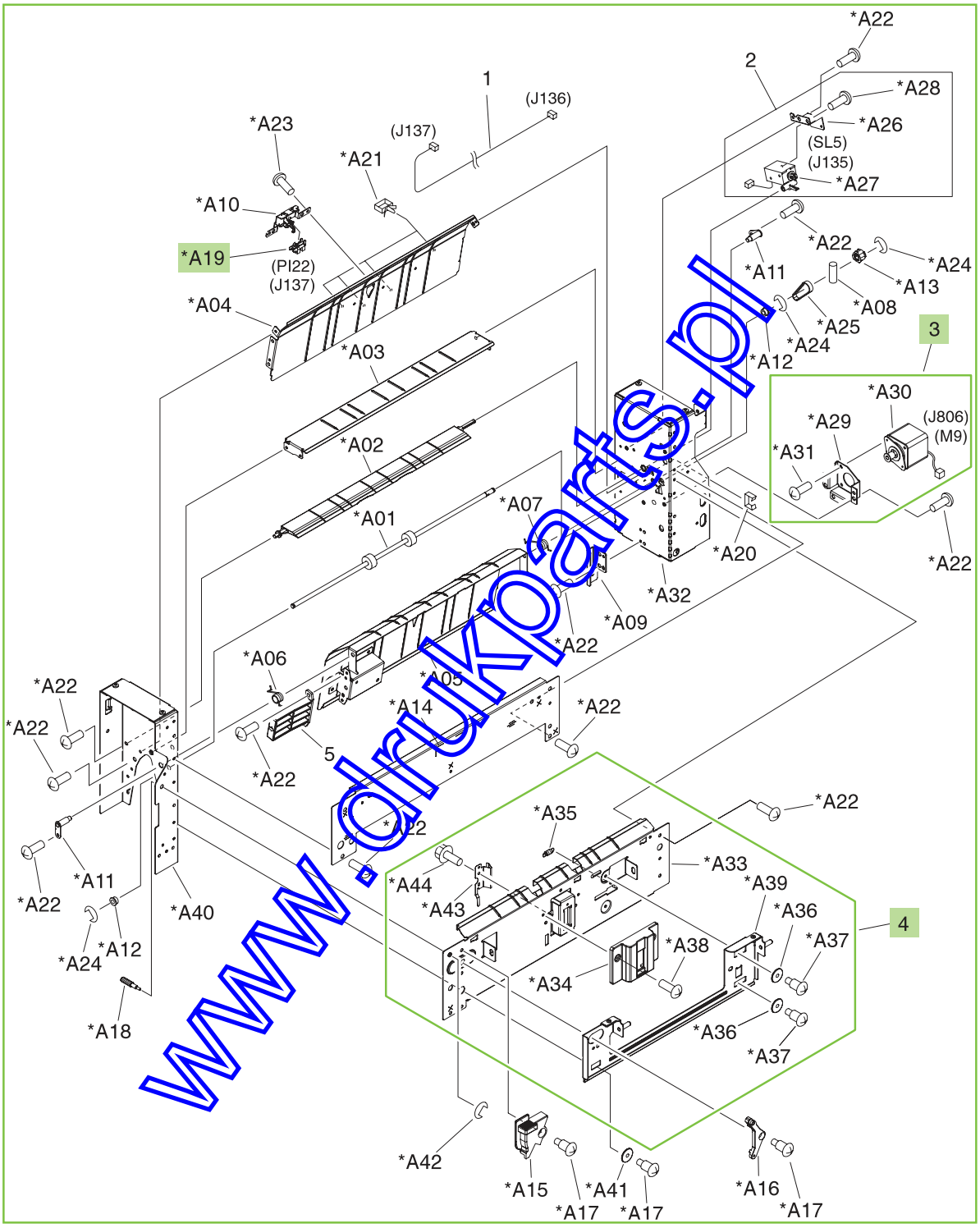

www.drukparts.pl

Table 9-52 Saddle paper-feeder assembly (booklet-maker)

Ref	Description	Part number	Qty
All	Saddle paper-feeder assembly	RM1-4109-000CN	1
3	Saddle-motor assembly	FM2-0737-000CN	1
4	Entrance lower-guide assembly	RM1-4110-000CN	1
A19	Photo interrupter, TLP1242	WG8-5593-000CN	1

NOTE: Only highlighted parts are orderable.

www.drukparts.pl

Figure 9-69 Pass lower-guide assembly (booklet-maker)

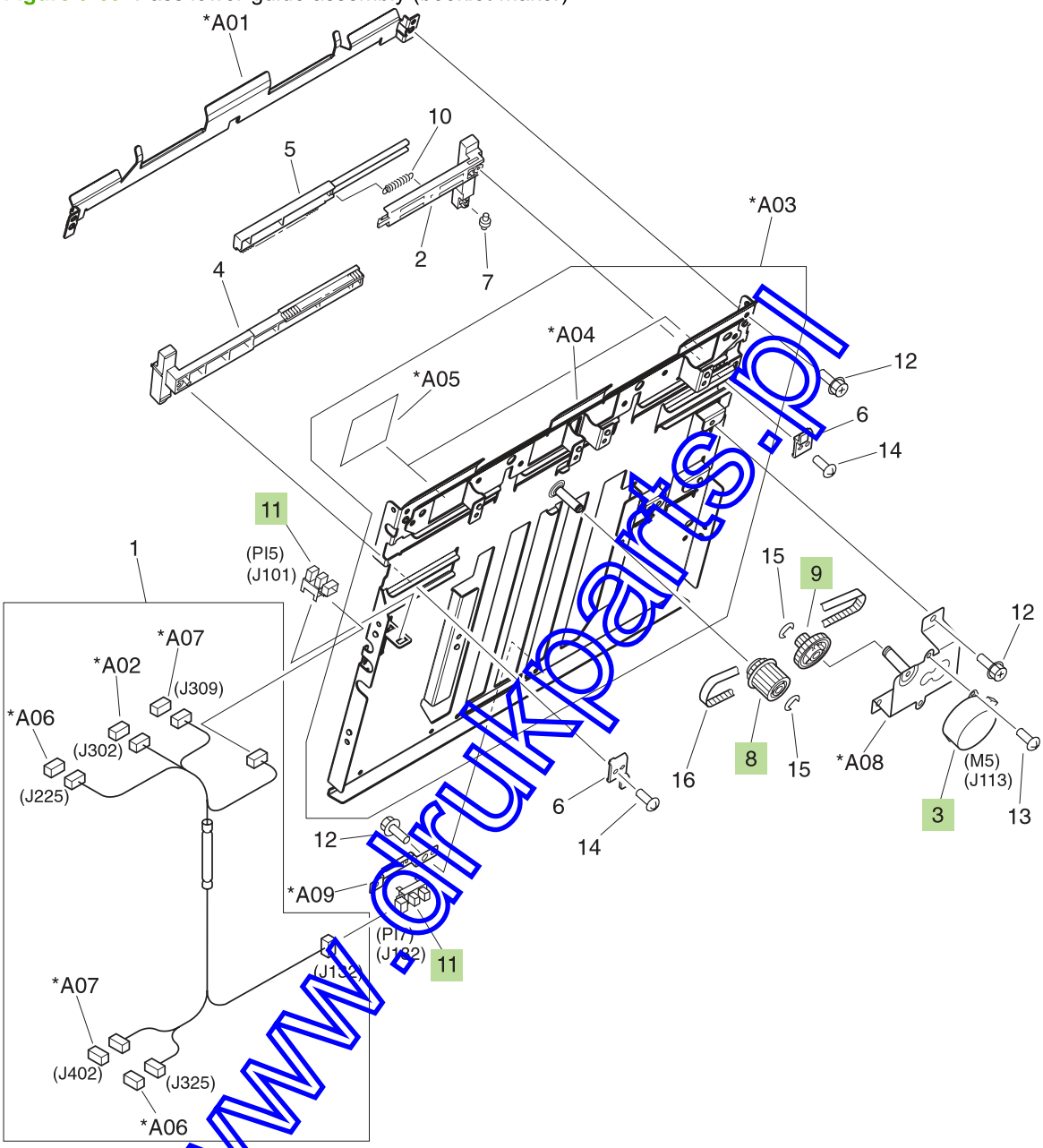

www.drukparts.pl

Table 9-53 Pass lower-guide assembly (booklet-maker)

Ref	Description	Part number	Qty
3	Motor, stepping	4K1-1103-000CN	1
8	Pulley, 32T/gear, 16T	FS6-0814-000CN	1
9	Pulley, 16T/gear, 32T	FS6-0815-000CN	1
11	Photo interrupter, TLP1242	WG8-5593-000CN	2

NOTE: Only highlighted parts are orderable.

www.drukparts.pl

Figure 9-70 Inner side-plate assembly (booklet-maker)

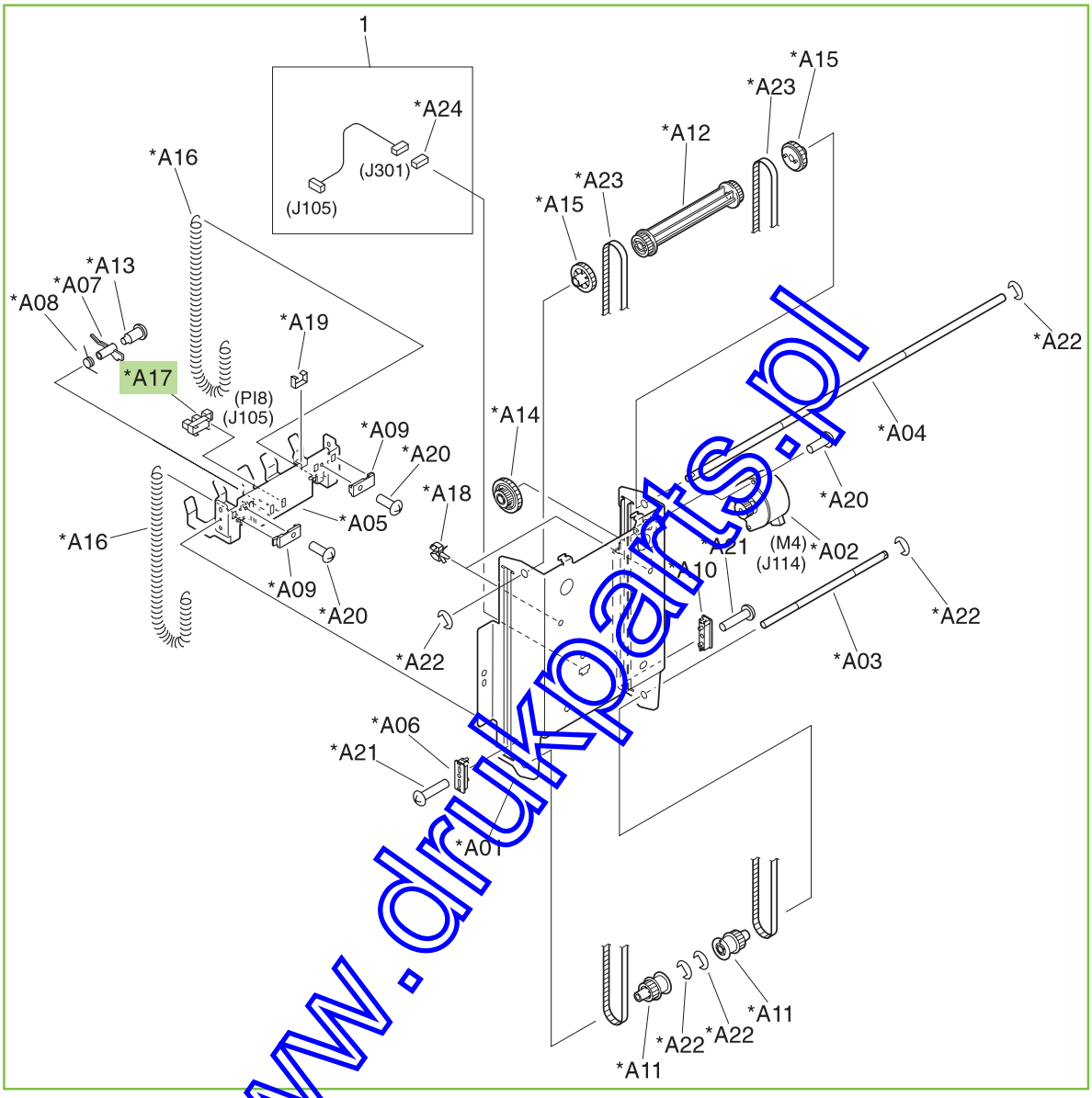

www.drukparts.pl

Table 9-54 Inner side-plate assembly (booklet-maker)

Ref	Description	Part number	Qty
All	Inner side-plate assembly	4G3-0671-000CN	1
A17	Photo interrupter, TLP1242	WG8-5593-000CN	1

NOTE: Only highlighted parts are orderable.

www.drukparts.pl

Figure 9-71 Saddle paper-delivery assembly (booklet-maker)

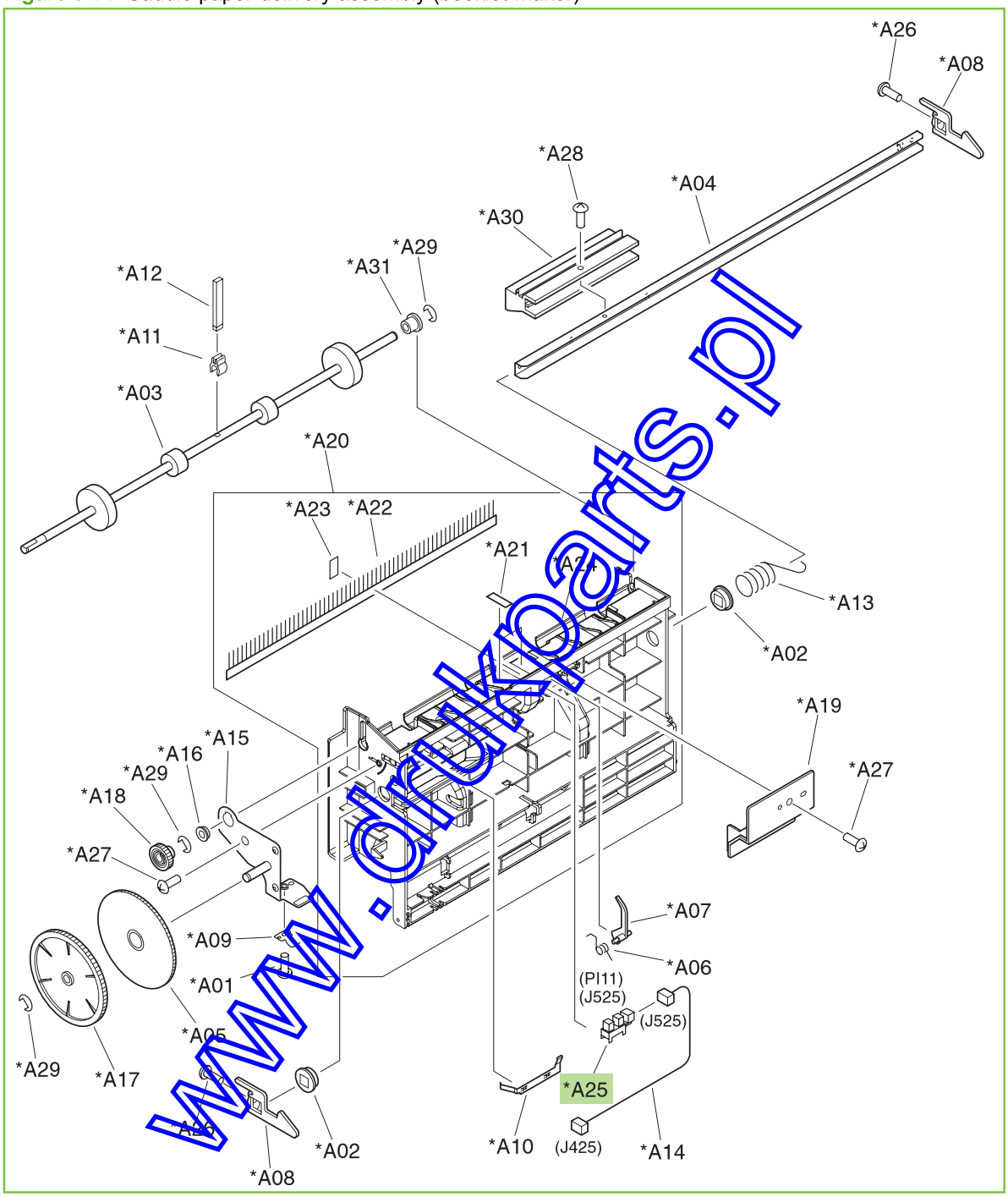

www.drukparts.pl

Table 9-55 Saddle paper-delivery assembly (booklet-maker)

Ref	Description	Part number	Qty
All	Saddle paper-delivery assembly	RM1-4130-000CN	1
A25	Photo interrupter, TLP1242	WG8-5593-000CN	1

NOTE: Only highlighted parts are orderable.

www.drukparts.pl

Figure 9-72 Motor-mount assembly (booklet-maker)

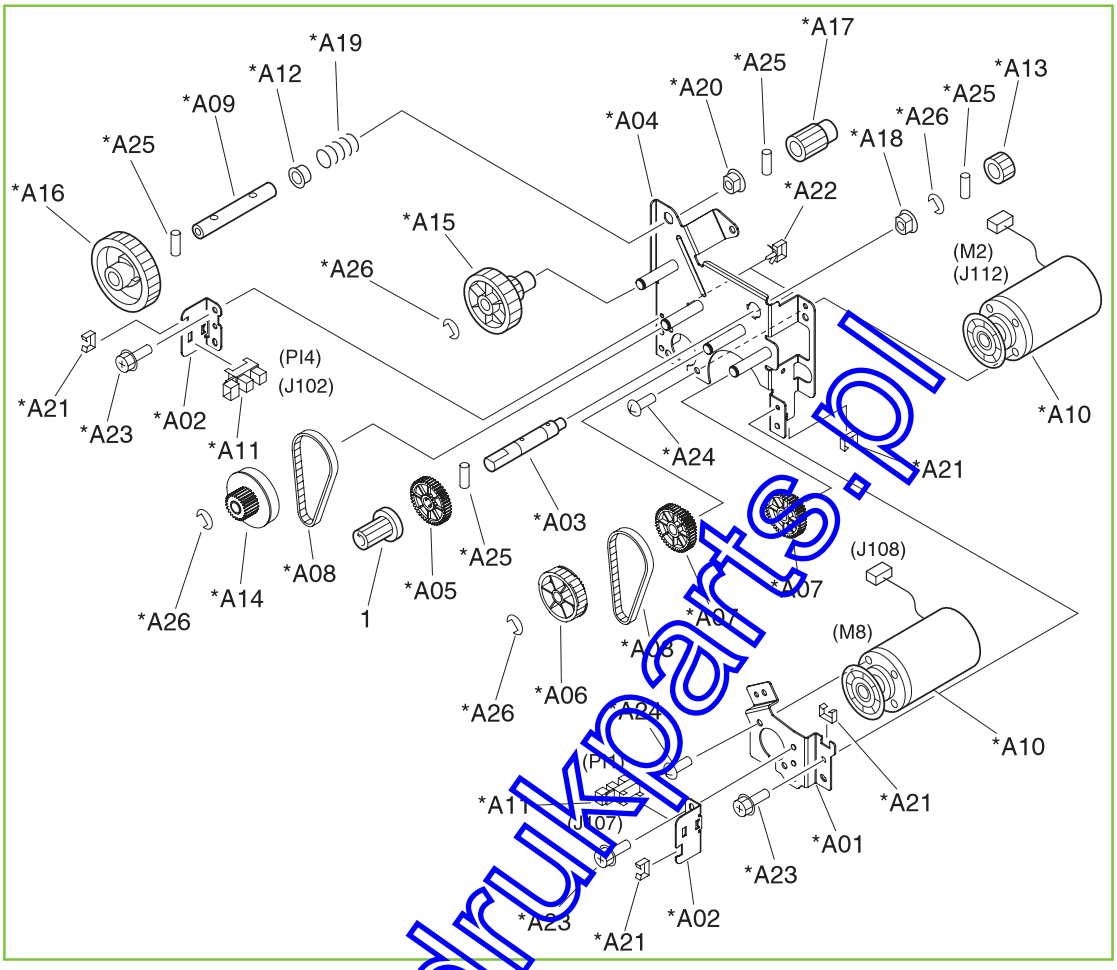

www.drukparts.pl

Table 9-56 Motor-mount assembly (booklet-maker)

Ref	Description	Part number	Qty
All	Motor-mount assembly	4G3-0670-000CN	1

NOTE: Only highlighted parts are orderable.

www.drukparts.pl

Figure 9-73 PCA assembly

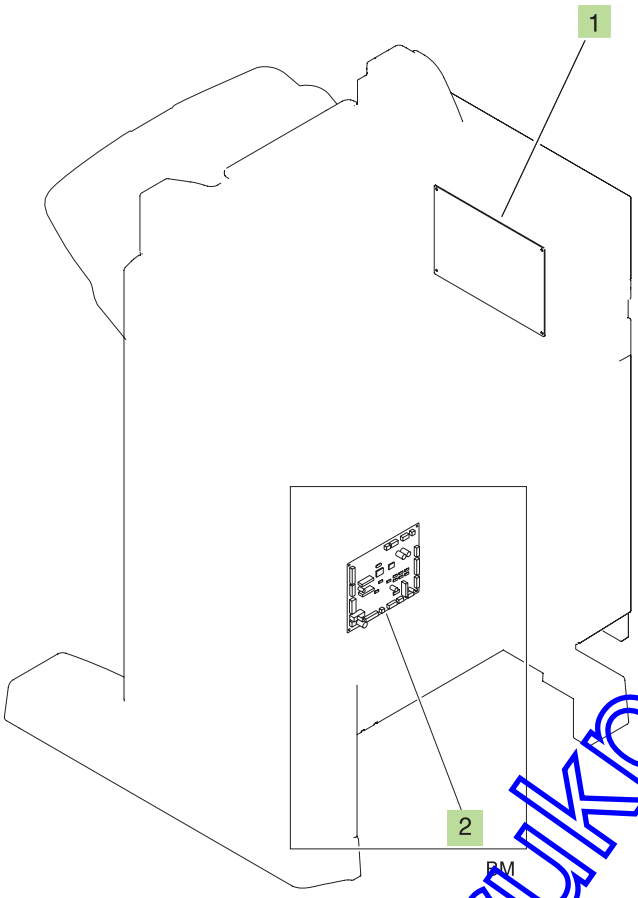

www.drukparts.pl

Table 9-57 PCA assembly

Ref	Description	Part number	Qty
1	Main controller PCA assembly (stapler/stacker and booklet-maker)	RM1-4139-000CN	1
2	Saddle-controller PCA assembly (booklet-maker)	RM1-4140-000CN	1

NOTE: Only highlighted parts are orderable.

www.drukparts.pl

Alphabetical parts list

Table 9-58 Alphabetical parts list

Description	Part number	Table and page
2000-staple cartridge (for booklet making)	CC383-67901	Staple assembly (stapler/ stacker and booklet-maker) on page 897
2000-staple cartridge (for booklet making)	CC383-67901	Saddle-stapler assembly (booklet-maker) on page 911
2nd-transfer-roller assembly	RM1-3319-000CN	Printer internal components (3 of 7) on page 797
5000-staple replacement cartridge	C8091-67901	Staple assembly (stapler/ stacker and booklet-maker) on page 897
5000-staple replacement cartridge	C8091-67901	Saddle-stapler assembly (booklet-maker) on page 911
Approach-switch assembly	FM2-0710-000CN	Output bin 1 (stack upper-tray assembly) (booklet-maker) on page 877
Area-sensor flag assembly	RM1-4107-000CN	Finisher main body (stapler/ stacker and booklet-maker) on page 869
Area-sensor holder assembly	FM2-0709-000CN	Output bin 1 (stack upper-tray assembly) (stapler/stacker) on page 873
Area-sensor holder assembly	FM2-0709-000CN	Output bin 1 (stack upper-tray assembly) (booklet-maker) on page 877
Area-sensor holder assembly	FM2-0709-000CN	Output bin 2 (stack lower-tray assembly) (stapler/stacker and booklet-maker) on page 881
Area-sensor PCA assembly	4G1-1498-000CN	Output bin 1 (stack upper-tray assembly) (stapler/stacker) on page 873
Area-sensor PCA assembly	4G1-1498-000CN	Output bin 1 (stack upper-tray assembly) (booklet-maker) on page 877
Area-sensor PCA assembly	4G1-1498-000CN	Output bin 2 (stack lower-tray assembly) (stapler/stacker and booklet-maker) on page 881
Arm, 1st-estrangement	RC1-9189-000CN	Printer internal components (3 of 7) on page 797
Arm, adjustment, front	4A3-1763-000CN	Saddle assembly (booklet-maker) on page 903
Arm, adjustment, rear	4A3-1764-000CN	Saddle assembly (booklet-maker) on page 903
Arm, lock	RC1-9913-000CN	Input-tray main body (1x500-sheet) on page 835

www.drukparts.pl

Table 9-58 Alphabetical parts list (continued)

Description	Part number	Table and page
Arm, lock	RC1-9913-000CN	Input-tray main body (3x500-sheet) on page 839
Arm, paper-delivery gate	RC2-1293-000CN	Swing-guide assembly (stapler/stacker and booklet-maker) on page 893
Auto-close assembly, 1x500-sheet	RM1-3531-040CN	Input-tray auto-close assembly on page 843
Auto-close assembly, 3x500-sheet	RM1-3531-040CN	Input-tray auto-close assembly on page 843
Band, door	RC1-9043-000CN	Printer front-door assembly on page 789
Bearing, ball	XG9-0586-000CN	Printer internal components (4 of 7) on page 799
Bearing, ball, 6902ZZNR	4S3-1050-000CN	Saddle assembly (booklet-maker) on page 903
Belt, paper-feed, cogged	RC1-9674-000CN	Intermediate-feed main body on page 851
Belt, timing	XF2-1608-840CN	Finisher main body (stapler/stacker and booklet-maker) on page 869
Belt, timing	XF2-3837-340CN	Saddle assembly (booklet-maker) on page 903
Belt, timing, cogged	XF2-1607-860CN	Finisher main body (stapler/stacker and booklet-maker) on page 869
Belt, timing, cogged	XF9-0748-000CN	Finisher main body (stapler/stacker and booklet-maker) on page 869
Block, reinforcement (simplex)	RC1-9354-000CN	Printer internal components (2 of 7) on page 795
Booklet-output bin (saddle-tray assembly)	RM1-4113-000CN	Saddle-tray assembly (booklet-maker) on page 907
Bushing	RC1-8734-000CN	Printer internal components (3 of 7) on page 797
Bushing	RC1-9915-000CN	Input-tray main body (1x500-sheet) on page 835
Bushing	RC1-9915-000CN	Input-tray main body (3x500-sheet) on page 839
Bushing	FU5-1169-000CN	Output bin 2 (stack lower-tray assembly) (stapler/stacker and booklet-maker) on page 881
Button, main-switch	RC1-9300-000CN	Printer internal components (7 of 7) on page 807
Cable TP/T2 open-sensor	RM1-5030-000CN	Printer internal components (7 of 7) on page 807

www.drukparts.pl

Table 9-58 Alphabetical parts list (continued)

Description	Part number	Table and page
Cable, fixing open-sensor	RM1-5029-000CN	Printer internal components (5 of 7) on page 803
Cable, flexible flat	RK2-1356-000CN	Printer internal components (6 of 7) on page 805
Cable, laser flexible flat	RK2-1354-000CN	Printer internal components (2 of 7) on page 795
Cable, laser flexible flat	RK2-1355-000CN	Printer internal components (2 of 7) on page 795
Cable, operation-tray	FG3-2903-000CN	Operation-tray assembly (stapler/stacker and booklet-maker) on page 885
Cable, option-sensor PCA connect	RM1-3574-000CN	Input-tray main body (1x500-sheet) on page 835
Cable, option-sensor PCA connect	RM1-3574-000CN	Input-tray main body (3x500-sheet) on page 839
Cable, paper-pickup option	RM1-3575-000CN	Input-tray main body (1x500-sheet) on page 835
Cable, paper-pickup option	RM1-3575-000CN	Input-tray main body (3x500-sheet) on page 839
Cable, paper-pickup-option drawer	RM1-3571-000CN	Input-tray main body (3x500-sheet) on page 839
Cable, pickup-option door switch	RM1-3572-000CN	Input-tray main body (1x500-sheet) on page 835
Cable, pickup-option door switch	RM1-3572-000CN	Input-tray main body (3x500-sheet) on page 839
Cable, pickup-option drawer	RM1-3571-000CN	Input-tray main body (1x500-sheet) on page 835
Cable, pickup-option lifter unit	RM1-3576-000CN	Input-tray auto-close assembly on page 843
Cable, pickup-option PCA connect	RM1-3573-000CN	Input-tray main body (3x500-sheet) on page 839
Cable, saddle-unit	4G1-2283-000CN	Saddle assembly (booklet-maker) on page 903
Cable, sensor	4G1-2285-000CN	Saddle-tray assembly (booklet-maker) on page 907
Cable, solenoid	FG3-2892-000CN	Finisher main body (stapler/stacker and booklet-maker) on page 869
Cable, staple-connecting assembly	4G3-1777-000CN	Staple assembly (stapler/stacker and booklet-maker) on page 897
Cable-mount lattice assembly	RM1-4128-000CN	Finisher main body (stapler/stacker and booklet-maker) on page 869
Cartridge contact-holder assembly	RM1-3254-000CN	Printer internal components (7 of 7) on page 807

www.drukparts.pl

Table 9-58 Alphabetical parts list (continued)

Description	Part number	Table and page
Cartridge-interface assembly kit with service document	Q3931-67917	Printer internal components (7 of 7) on page 807
Cassette (1x500-sheet)	RM1-3529-000CN	Input-tray cassette on page 845
Cassette (3x500-sheet)	RM1-3529-000CN	Input-tray cassette on page 845
Cassette paper-pickup assembly (includes 1 pick and 2 feed rollers)	RM1-3206-000CN	Printer cassette paper-pickup assembly on page 815
Cassette-assembly kit	Q3931-67918	Printer cassette on page 813
Caster, double-lock, front	RC1-9896-000CN	Input-tray main body (1x500-sheet) on page 835
Caster, double-lock, front	RC1-9896-000CN	Input-tray main body (3x500-sheet) on page 839
Caster, rear	RC1-9917-000CN	Input-tray main body (1x500-sheet) on page 835
Caster, rear	RC1-9917-000CN	Input-tray main body (3x500-sheet) on page 839
Caster, universal	RC2-1316-000CN	Finisher main body (stapler/stacker and booklet-maker) on page 869
Clamp, cable	WT2-5738-000CN	Input-tray main body (1x500-sheet) on page 835
Clamp, cable	WT2-5738-000CN	Input-tray main body (3x500-sheet) on page 839
Clamp, FFC	WT2-5912-000CN	Printer internal components (2 of 7) on page 795
Clamp, formatter cable	RC1-9261-000CN	Printer internal components (7 of 7) on page 807
Claw, latch, right	FC5-5021-000CN	Saddle assembly (booklet-maker) on page 903
Clutch, electromagnetic	4H3-0370-000CN	Finisher main body (stapler/stacker and booklet-maker) on page 869
Color-plane-registration joint cable	RM1-3624-000CN	Printer internal components (6 of 7) on page 805
Color-plane-registration sensor assembly	RM1-3258-000CN	Printer internal components (3 of 7) on page 797
Connector, drawer	VS1-7258-000CN	Printer internal components (5 of 7) on page 803
Connector, drawer	VS1-7257-012CN	Input-tray main body (1x500-sheet) on page 835
Connector, drawer	VS1-7257-012CN	Input-tray main body (3x500-sheet) on page 839
Connector, snap-tight	VS1-7177-002CN	Printer internal components (2 of 7) on page 795

www.drukparts.pl

Table 9-58 Alphabetical parts list (continued)

Description	Part number	Table and page
Connector, snap-tight	VS1-7177-003CN	Printer internal components (4 of 7) on page 799
Control-panel unit	RM1-4516-000CN	Printer external covers and panels on page 787
Cover, blanking (simplex)	RC1-9362-000CN	Printer external covers and panels on page 787
Cover, cassette back-end	RC1-9201-000CN	Printer internal components (5 of 7) on page 803
Cover, face-down	Q3931-67905	Printer external covers and panels on page 787
Cover, face-down drive	RC1-9360-000CN	Printer external covers and panels on page 787
Cover, front-lower	RL1-1717-000CN	External panels and covers (stapler/stacker) on page 861
Cover, front-lower	RL1-1717-000CN	External panels and covers (booklet-maker) on page 863
Cover, front-upper	RC1-9873-000CN	Input-tray main body (1x500-sheet) on page 835
Cover, front-upper	RC1-9873-000CN	Input-tray main body (3x500-sheet) on page 839
Cover, intermediate-feed SW.	RC1-9667-000CN	Intermediate-feed main body on page 851
Cover, internal, lower (booklet-maker only)	RL1-1477-000CN	Finisher main body (stapler/stacker and booklet-maker) on page 869
Cover, internal, lower (stapler/stacker only)	RC2-1351-000CN	Finisher main body (stapler/stacker and booklet-maker) on page 869
Cover, internal, right	RC1-9348-000CN	Printer internal components (3 of 7) on page 797
Cover, left	RC1-9336-000CN	Printer external covers and panels on page 787
Cover, left	RC1-9872-000CN	Input-tray main body (1x500-sheet) on page 835
Cover, left	RC1-9872-000CN	Input-tray main body (3x500-sheet) on page 839
Cover, left-lower	RC2-1280-000CN	External panels and covers (booklet-maker) on page 863
Cover, main-switch	RC1-9211-000CN	Printer internal components (7 of 7) on page 807
Cover, motor	RC1-9511-000CN	Printer right-door assembly on page 791
Cover, multi-purpose blanking	RC1-8527-000CN	Printer right-door assembly on page 791

www.drukparts.pl

Table 9-58 Alphabetical parts list (continued)

Description	Part number	Table and page
Cover, option-slide	RC2-1347-000CN	External panels and covers (stapler/stacker) on page 861
Cover, option-tray, front	RL1-2210-000CN	Output bin 1 (stack upper-tray assembly) (stapler/stacker) on page 873
Cover, panel	RC1-9341-000CN	Printer external covers and panels on page 787
Cover, rear	RL1-1210-000CN	Printer external covers and panels on page 787
Cover, rear	RC1-9871-000CN	Input-tray main body (1x500-sheet) on page 835
Cover, rear	RC1-9871-000CN	Input-tray main body (3x500-sheet) on page 839
Cover, rear	RC2-1278-000CN	External panels and covers (stapler/stacker) on page 861
Cover, rear	RC2-1278-000CN	External panels and covers (booklet-maker) on page 863
Cover, rear-left	RC1-9344-000CN	Printer external covers and panels on page 787
Cover, rear-lower	RL1-1718-000CN	External panels and covers (stapler/stacker) on page 861
Cover, rear-lower	RL1-1718-000CN	External panels and covers (booklet-maker) on page 863
Cover, rear-upper	RC1-9342-000CN	Printer external covers and panels on page 787
Cover, right-front	RL1-1322-000CN	Input-tray main body (1x500-sheet) on page 835
Cover, right-front	RL1-1321-000CN	Input-tray main body (3x500-sheet) on page 839
Cover, right-lower	RC1-9874-000CN	Input-tray main body (1x500-sheet) on page 835
Cover, right-lower	RC1-9874-000CN	Input-tray main body (3x500-sheet) on page 839
Cover, right-upper	RC1-9339-000CN	Printer external covers and panels on page 787
Cover, tray-connector	RC2-1279-000CN	External panels and covers (stapler/stacker) on page 861
Cover, tray-connector	RC2-1279-000CN	External panels and covers (booklet-maker) on page 863
Damper assembly	RM1-3688-000CN	Intermediate-feed main body on page 851
Damper, gear	RC1-8925-000CN	Printer internal components (4 of 7) on page 799
DC controller kit with service document	Q3931-67922	Printer PCA assembly location on page 831

www.drukparts.pl

Table 9-58 Alphabetical parts list (continued)

Description	Part number	Table and page
DC motor assembly	RM1-4519-000CN	Printer internal components (4 of 7) on page 799
DC-controller kit with service document	Q3931-67916	Printer internal components (6 of 7) on page 805
DC-controller power cable	RM1-3610-000CN	Printer internal components (6 of 7) on page 805
Deflector	FB3-7928-020CN	Saddle assembly (booklet-maker) on page 903
Deflector	FB5-2697-000CN	Saddle assembly (booklet-maker) on page 903
Delivery-switch mount assembly	FM2-1639-000CN	Saddle assembly (booklet-maker) on page 903
Door, stock	RC1-9921-000CN	Input-tray main body (1x500-sheet) on page 835
Drive-belt assembly	RM1-3684-000CN	Intermediate-feed main body on page 851
Drum-motor assembly	RM1-3286-000CN	Printer internal components (4 of 7) on page 799
Duct, air	RC1-8961-000CN	Printer internal components (4 of 7) on page 799
Duct, cartridge	RC1-9275-000CN	Printer internal components (4 of 7) on page 799
Duct, face-down joint	RC1-8964-000CN	Printer internal components (4 of 7) on page 799
Duct, scanner	RC1-9334-000CN	Printer internal components (2 of 7) on page 795
Duct, scanner-fan	RC1-9309-000CN	Printer internal components (4 of 7) on page 799
Duplex-switchback tray assembly kit	Q3931-67921	Printer duplexing-tray assembly on page 827
Duplexing-feed assembly	RM1-3665-000CN	Printer duplexing-feed assembly on page 829
Duplexing-reverse assembly	RM1-3652-000CN	Printer duplexing-reverse assembly on page 825
Entrance lower-guide assembly	RM1-4110-000CN	Saddle paper-feeder assembly (stapler/stacker) on page 913
Entrance lower-guide assembly	RM1-4110-000CN	Saddle paper-feeder assembly (booklet-maker) on page 915
Entrance upper-guide assembly	RM1-4172-000CN	Entrance upper-guide assembly (stapler/stacker and booklet-maker) on page 895
Entrance-sensor flag assembly	FM2-0718-000CN	Finisher main body (stapler/stacker and booklet-maker) on page 869

www.drukparts.pl

Table 9-58 Alphabetical parts list (continued)

Description	Part number	Table and page
Face-down end-tray assembly	RM1-3340-000CN	Printer external covers and panels on page 787
Face-down full-flag assembly	RM1-4391-000CN	Printer face-down paper-delivery assembly on page 823
Face-down paper-delivery assembly	RM1-3293-000CN	Printer face-down paper-delivery assembly on page 823
Face-down unit-1 cable	RM1-3390-000CN	Printer internal components (7 of 7) on page 807
Face-down unit-2 cable	RM1-3391-000CN	Printer internal components (7 of 7) on page 807
Fan	RK2-1377-000CN	Printer internal components (4 of 7) on page 799
Fan	RK2-1382-000CN	Printer internal components (4 of 7) on page 799
Fan	RK2-1384-000CN	Printer internal components (4 of 7) on page 799
Fan	RK2-1378-000CN	Printer internal components (5 of 7) on page 803
Fan	RK2-1378-000CN	Printer duplexing-reverse assembly on page 825
Fan assembly	RM1-3364-000CN	Printer internal components (2 of 7) on page 795
Filter unit, air	RC1-9313-000CN	Printer external covers and panels on page 787
Fin-lock assembly	RM1-3685-000CN	Intermediate-feed main body on page 851
Fixing assembly kit, 110-127V	Q3931-67914	Printer internal components (4 of 7) on page 799
Fixing assembly kit, 220-240V	Q3931-67915	Printer internal components (4 of 7) on page 799
Fixing one-way gear assembly	RM1-3247-000CN	Printer internal components (4 of 7) on page 799
Fixing power-supply assembly	RM1-3218-000CN	Printer internal components (7 of 7) on page 807
Fixing power-supply assembly	RM1-3218-000CN	Printer PCA assembly location on page 831
Fixing-bias cable assembly	RM1-4409-000CN	Printer internal components (7 of 7) on page 807
Fixing-fan cover assembly	RM1-5950-000CN	Printer external covers and panels on page 787
Fixing-joint cable	RM1-3612-000CN	Printer internal components (7 of 7) on page 807

www.drukparts.pl

Table 9-58 Alphabetical parts list (continued)

Description	Part number	Table and page
Fixing-motor cable	RM1-3217-000CN	Printer internal components (6 of 7) on page 805
Flag, paper-face sensing, upper	FC5-4162-000CN	External panels and covers (stapler/stacker) on page 861
Flag, paper-sensing sensor	FC5-5004-000CN	External panels and covers (stapler/stacker) on page 861
Flag, paper-sensing sensor	FC5-5004-000CN	External panels and covers (booklet-maker) on page 863
Flag, roller	FB3-7925-030CN	Saddle assembly (booklet-maker) on page 903
Flag, sensor	FB3-7979-000CN	Saddle assembly (booklet-maker) on page 903
Flag, sensor	FB5-5937-020CN	Saddle assembly (booklet-maker) on page 903
Flexible-cable mount assembly	FM2-0720-000CN	Finisher main body (stapler/stacker and booklet-maker) on page 869
Foot, rubber	RC1-9208-000CN	Printer internal components (6 of 7) on page 805
Formatter-case assembly	RM1-3253-000CN	Printer internal components (6 of 7) on page 805
Front cable	RM1-3617-000CN	Printer internal components (6 of 7) on page 805
Front-door assembly	RM1-3356-000CN	Printer front-door assembly on page 789
Front-door assembly	RM1-4134-000CN	External panels and covers (stapler/stacker) on page 861
Front-door assembly	RM1-4122-000CN	External panels and covers (booklet-maker) on page 863
Gear, 16T	FS6-0823-000CN	Saddle assembly (booklet-maker) on page 903
Gear, 16T	FS6-0830-000CN	Saddle assembly (booklet-maker) on page 903
Gear, 16T/33T	FS6-0822-000CN	Saddle assembly (booklet-maker) on page 903
Gear, 16T/56T	FS6-0829-000CN	Saddle assembly (booklet-maker) on page 903
Gear, 17T	FU5-0457-000CN	Output bin 1 (stack upper-tray assembly) (booklet-maker) on page 877
Gear, 17T	FU5-0457-000CN	Output bin 2 (stack lower-tray assembly) (stapler/stacker and booklet-maker) on page 881
Gear, 29T	FU5-2399-000CN	Finisher main body (stapler/stacker and booklet-maker) on page 869

www.drukparts.pl

Table 9-58 Alphabetical parts list (continued)

Description	Part number	Table and page
Gear, 30T	FU5-0428-000CN	Finisher main body (stapler/ stacker and booklet-maker) on page 869
Gear, 34T	RU5-0791-000CN	Printer internal components (4 of 7) on page 799
Gear, 40T	FU5-0454-000CN	Finisher main body (stapler/ stacker and booklet-maker) on page 869
Gear, 44T	FU5-0435-000CN	Output bin 1 (stack upper-tray assembly) (stapler/stacker) on page 873
Gear, 44T	FU5-0435-000CN	Output bin 1 (stack upper-tray assembly) (booklet-maker) on page 877
Gear, 44T	FU5-0435-000CN	Output bin 2 (stack lower-tray assembly) (stapler/stacker and booklet-maker) on page 881
Gear, 50T	4S3-0171-000CN	Saddle assembly (booklet-maker) on page 903
Gear, 83T/25T	RU5-0790-000CN	Printer internal components (4 of 7) on page 799
Grip-support front assembly	RM1-3225-000CN	Printer internal components (2 of 7) on page 795
Grip-support rear assembly	RM1-3226-000CN	Printer internal components (2 of 7) on page 795
Guide, cable	RC1-9329-000CN	Printer internal components (6 of 7) on page 805
Guide, cable, A	RC1-9306-000CN	Printer internal components (7 of 7) on page 807
Guide, cable, B	RC1-9307-000CN	Printer internal components (6 of 7) on page 805
Guide, cable, C	RC1-9308-000CN	Printer internal components (6 of 7) on page 805
Guide, cable, D	RC1-9312-000CN	Printer internal components (6 of 7) on page 805
Guide, cable, E	RC1-9318-000CN	Printer internal components (6 of 7) on page 805
Guide, cable, F	RC1-9323-000CN	Printer internal components (7 of 7) on page 807
Guide, duplexing-feed, upper (duplex)	RL1-1335-000CN	Printer right-door assembly on page 791
Guide, face-down inner	RC1-8959-000CN	Printer internal components (2 of 7) on page 795
Guide, fixing-cable	RC1-9332-000CN	Printer internal components (7 of 7) on page 807

www.drukparts.pl

Table 9-58 Alphabetical parts list (continued)

Description	Part number	Table and page
Guide, intermediate transfer belt (ITB)-entrance, front	RC1-9185-000CN	Printer internal components (3 of 7) on page 797
Guide, intermediate transfer belt (ITB)-entrance, rear	RC1-9186-000CN	Printer internal components (3 of 7) on page 797
Guide, multi-purpose, right	RL1-1283-000CN	Printer internal components (2 of 7) on page 795
Guide, multi-purpose, upper	RC1-8526-000CN	Printer multi-purpose paper-pickup assembly on page 817
Guide, paper-feed roller	RC1-9881-000CN	Input-tray main body (1x500-sheet) on page 835
Guide, paper-feed roller	RC1-9881-000CN	Input-tray main body (3x500-sheet) on page 839
Guide, side-wall	RC2-1284-000CN	External panels and covers (booklet-maker) on page 863
Guide-motor assembly	4G3-0725-000CN	Saddle assembly (booklet-maker) on page 903
Guide-sensor assembly	RM1-4400-000CN	Printer internal components (5 of 7) on page 803
High-voltage transfer B PCA assembly	RM1-5475-000CN	Printer internal components (1 of 7) on page 793
High-voltage-transfer A PCA assembly	RM1-3582-000CN	Printer internal components (7 of 7) on page 807
High-voltage-transfer A PCA assembly	RM1-3582-000CN	Printer PCA assembly location on page 831
High-voltage-transfer B PCA assembly	RM1-5475-000CN	Printer PCA assembly location on page 831
Hinge, front-door, 1	FC5-4991-030CN	Finisher main body (stapler/stacker and booklet-maker) on page 869
Hinge, front-door, 2	FC5-4992-030CN	Finisher main body (stapler/stacker and booklet-maker) on page 869
Holder, cartridge-fan	RC1-9277-000CN	Printer internal components (4 of 7) on page 799
Holder, environment-sensor	RC1-9324-000CN	Printer internal components (2 of 7) on page 795
Holder, fixing-fan	RC1-9278-000CN	Printer internal components (4 of 7) on page 799
Holder, high-voltage-connector	RC1-9328-000CN	Printer internal components (7 of 7) on page 807
Holder, roller, 2	FB3-7973-000CN	Saddle assembly (booklet-maker) on page 903
Holder, scanner-fan	RC1-9279-000CN	Printer internal components (4 of 7) on page 799

www.drukparts.pl

Table 9-58 Alphabetical parts list (continued)

Description	Part number	Table and page
Holder, scanner-thermistor	RC1-9260-000CN	Printer internal components (2 of 7) on page 795
Inner side-plate assembly	4G3-0671-000CN	Saddle assembly (booklet-maker) on page 903
Inner side-plate assembly	4G3-0671-000CN	Inner side-plate assembly (booklet-maker) on page 919
Inner-cover assembly	RM1-4123-000CN	Finisher main body (stapler/stacker and booklet-maker) on page 869
Interface-joint cable	RM1-3623-000CN	Printer internal components (6 of 7) on page 805
Interlock-switch assembly	RM1-3589-000CN	Printer internal components (2 of 7) on page 795
Intermediate paper-transfer unit (IPTU)-driver PCA assembly	RM1-3559-000CN	Intermediate-feed main body on page 851
Intermediate paper-transfer unit (IPTU)-driver PCA assembly	RM1-3559-000CN	PCA assembly on page 857
Intermediate transfer belt (ITB) assembly	RM1-3307-000CN	Printer internal components (3 of 7) on page 797
Intermediate transfer belt (ITB) duct assembly	RM1-4401-000CN	Printer internal components (5 of 7) on page 803
Intermediate transfer belt (ITB) estrangement-drive assembly	RM1-3280-000CN	Printer internal components (3 of 7) on page 797
Intermediate transfer belt (ITB) lock-support front assembly	RM1-3228-000CN	Printer internal components (3 of 7) on page 797
Intermediate transfer belt (ITB) lock-support rear assembly	RM1-3215-000CN	Printer internal components (3 of 7) on page 797
Intermediate transfer belt (ITB)-drawer assembly	RM1-3240-000CN	Printer internal components (3 of 7) on page 797
Knob (booklet-maker only)	FB3-7881-000CN	Finisher main body (stapler/stacker and booklet-maker) on page 869
Knob, latch	FC5-5024-000CN	Saddle-guide assembly (booklet-maker) on page 909
LED-PCA assembly	RM1-4141-000CN	External panels and covers (stapler/stacker) on page 861
LED-PCA assembly	RM1-4141-000CN	External panels and covers (booklet-maker) on page 863
Left upper-cover assembly	RM1-4179-000CN	External panels and covers (stapler/stacker) on page 861
Left-side wall assembly	RM1-3233-000CN	Printer internal components (1 of 7) on page 793
Left-upper cover assembly	RM1-4129-000CN	External panels and covers (booklet-maker) on page 863
Lever, door-interlock shutter	RC1-9220-000CN	Printer internal components (5 of 7) on page 803

www.drukparts.pl

Table 9-58 Alphabetical parts list (continued)

Description	Part number	Table and page
Lever, lock	RC1-9883-000CN	Input-tray main body (1x500-sheet) on page 835
Lever, lock	RC1-9883-000CN	Input-tray main body (3x500-sheet) on page 839
Lever, paper-sensing	RC1-8928-000CN	Printer internal components (5 of 7) on page 803
Lever, stopper	4A3-1782-000CN	Saddle assembly (booklet-maker) on page 903
Lifter-drive-assembly kit	RM1-3222-020CN	Printer lifter-drive assembly on page 811
Limiter, torque	RC1-8519-000CN	Printer multi-purpose paper-pickup assembly on page 817
Limiter, torque	FC5-3657-000CN	Finisher main body (stapler/stacker and booklet-maker) on page 869
Link-slide assembly	4G3-0271-000CN	External panels and covers (stapler/stacker) on page 861
Link-slide assembly	4G3-0271-000CN	External panels and covers (booklet-maker) on page 863
Low-voltage power-supply assembly	RM1-3594-000CN	Printer internal components (5 of 7) on page 803
Low-voltage power-supply assembly	RM1-3594-000CN	Printer PCA assembly location on page 831
Lower height-guide assembly	RM1-4135-000CN	External panels and covers (stapler/stacker) on page 861
Lower-guide assembly	RM1-3686-000CN	Intermediate-feed lower-guide assembly on page 853
Main controller PCA assembly (stapler/stacker and booklet-maker)	RM1-4139-000CN	PCA assembly on page 925
Main drive-unit kit with service document	Q3931-67911	Printer internal components (4 of 7) on page 799
Main switch-holder assembly	RM1-3252-000CN	Printer internal components (7 of 7) on page 807
Memory-tag PCA assembly	RM1-3585-000CN	Printer internal components (4 of 7) on page 799
Memory-tag PCA assembly	RM1-3585-000CN	Printer PCA assembly location on page 831
Middle-height cover assembly	RM1-4119-000CN	External panels and covers (booklet-maker) on page 863
Motor, stepping	4K1-1103-000CN	Pass lower-guide assembly (booklet-maker) on page 917
Motor, stepping, DC	RK2-1366-000CN	Printer internal components (4 of 7) on page 799
Motor, stepping, DC	RK2-1370-000CN	Printer internal components (4 of 7) on page 799

www.drukparts.pl

Table 9-58 Alphabetical parts list (continued)

Description	Part number	Table and page
Motor, stepping, DC	RK2-1331-000CN	Input-tray main body (1x500-sheet) on page 835
Motor, stepping, DC	RK2-1331-000CN	Input-tray main body (3x500-sheet) on page 839
Motor, stepping, DC	RK2-1320-000CN	Intermediate-feed main body on page 851
Motor-mount assembly	4G3-0670-000CN	Saddle assembly (booklet-maker) on page 903
Motor-mount assembly	4G3-0670-000CN	Motor-mount assembly (booklet-maker) on page 923
Mount, LED-PCA	RC2-1735-000CN	External panels and covers (stapler/stacker) on page 861
Multi-purpose paper-pickup assembly	RM1-3345-000CN	Printer multi-purpose paper-pickup assembly on page 817
Multi-purpose-drive assembly	RM1-3365-000CN	Printer multi-purpose-drive assembly on page 809
Multi-purpose-guide assembly	RM1-3291-000CN	Printer multi-purpose-guide assembly on page 821
Multi-purpose-tray assembly	RM1-3341-000CN	Printer multi-purpose-tray assembly on page 819
Multi-tray cable	RM1-3630-000CN	Printer multi-purpose-tray assembly on page 819
Operation-tray assembly	RM1-4125-000CN	Operation-tray assembly (stapler/stacker and booklet-maker) on page 885
Option paper-sensor PCA assembly	RM1-3570-000CN	Input-tray paper-pickup assembly on page 847
Option-sensor assembly	FM2-1708-000CN	Output bin 1 (stack upper-tray assembly) (stapler/stacker) on page 873
Panel cable	RM1-3389-000CN	Printer internal components (6 of 7) on page 805
Panel, height, upper	RC2-1283-000CN	External panels and covers (stapler/stacker) on page 861
Panel, height, upper	RC2-1283-000CN	External panels and covers (booklet-maker) on page 863
Panel-joint cable	RM1-3622-000CN	Printer internal components (6 of 7) on page 805
Paper feed-roller assembly	RM1-0037-020CN	Input-tray paper-pickup assembly on page 847
Paper-delivery-guide assembly	RM1-4407-000CN	Printer face-down paper-delivery assembly on page 823
Paper-face sensing assembly	4G3-1624-000CN	External panels and covers (stapler/stacker) on page 861

www.drukparts.pl

Table 9-58 Alphabetical parts list (continued)

Description	Part number	Table and page
Paper-face sensing assembly	4G3-1624-000CN	External panels and covers (booklet-maker) on page 863
Paper-face sensor assembly	4G3-0934-000CN	External panels and covers (stapler/stacker) on page 861
Paper-face sensor assembly	4G3-0934-000CN	External panels and covers (booklet-maker) on page 863
Paper-feed PCA assembly	RM1-3569-000CN	Input-tray main body (1x500-sheet) on page 835
Paper-feed PCA assembly	RM1-3569-000CN	Input-tray main body (3x500-sheet) on page 839
Paper-feed PCA assembly (1x500-sheet)	RM1-3569-000CN	Input-tray PCA assembly on page 849
Paper-feed PCA assembly (3x500-sheet)	RM1-3569-000CN	Input-tray PCA assembly on page 849
Paper-feeder motor assembly	RM1-4175-000CN	Paper-feeder motor assembly (stapler/stacker and booklet-maker) on page 887
Paper-pickup assembly (1x500-sheet)	RM1-3538-000CN	Input-tray paper-pickup assembly on page 847
Paper-pickup assembly (3x500-sheet)	RM1-3538-000CN	Input-tray paper-pickup assembly on page 847
Paper-sensor assembly	FM2-0707-000CN	Output bin 1 (stack upper-tray assembly) (stapler/stacker) on page 873
Paper-sensor assembly	FM2-0707-000CN	Output bin 1 (stack upper-tray assembly) (booklet-maker) on page 877
Paper-sensor assembly	FM2-0707-000CN	Output bin 2 (stack lower-tray assembly) (stapler/stacker and booklet-maker) on page 881
Partition-plate assembly, cyan	RM1-3238-000CN	Printer internal components (1 of 7) on page 793
Partition-plate assembly, magenta	RM1-3237-000CN	Printer internal components (1 of 7) on page 793
Partition-plate assembly, yellow	RM1-3235-000CN	Printer internal components (1 of 7) on page 793
Photo interrupter, TLP1242	WG8-5593-000CN	External panels and covers (stapler/stacker) on page 861
Photo interrupter, TLP1242	WG8-5593-000CN	External panels and covers (booklet-maker) on page 863
Photo interrupter, TLP1242	WG8-5593-000CN	Finisher main body (stapler/stacker and booklet-maker) on page 869
Photo interrupter, TLP1242	WG8-5593-000CN	Output bin 1 (stack upper-tray assembly) (stapler/stacker) on page 873

www.drukparts.pl

Table 9-58 Alphabetical parts list (continued)

Description	Part number	Table and page
Photo interrupter, TLP1242	WG8-5593-000CN	Operation-tray assembly (stapler/stacker and booklet-maker) on page 885
Photo interrupter, TLP1242	WG8-5593-000CN	Operation-tray assembly (stapler/stacker and booklet-maker) on page 885
Photo interrupter, TLP1242	WG8-5593-000CN	Saddle assembly (booklet-maker) on page 903
Photo interrupter, TLP1242	WG8-5593-000CN	Saddle assembly (booklet-maker) on page 903
Photo interrupter, TLP1242	WG8-5593-000CN	Saddle assembly (booklet-maker) on page 903
Photo interrupter, TLP1242	WG8-5593-000CN	Saddle assembly (booklet-maker) on page 903
Photo interrupter, TLP1242	WG8-5593-000CN	Saddle-tray assembly (booklet-maker) on page 907
Photo interrupter, TLP1242	WG8-5593-000CN	Saddle paper-feeder assembly (booklet-maker) on page 915
Photo interrupter, TLP1242	WG8-5593-000CN	Pass lower-guide assembly (booklet-maker) on page 917
Photo interrupter, TLP1242	WG8-5593-000CN	Inner side-plate assembly (booklet-maker) on page 919
Photo interrupter, TLP1242	WG8-5593-000CN	Saddle paper-delivery assembly (booklet-maker) on page 921
Photo interrupter, TLP1243	WG8-5696-000CN	Printer internal components (2 of 7) on page 795
Photo interrupter, TLP1243	WG8-5696-000CN	Printer internal components (5 of 7) on page 803
Photo interrupter, TLP1243	WG8-5696-000CN	Printer internal components (7 of 7) on page 807
Photo interrupter, TLP1243	WG8-5696-000CN	Printer multi-purpose-guide assembly on page 821
Photo interrupter, TLP1243	WG8-5696-000CN	Printer face-down paper-delivery assembly on page 823
Photo interrupter, TLP1243	WG8-5696-000CN	Printer duplexing-reverse assembly on page 825
Photosensor assembly	RM1-3250-000CN	Printer internal components (2 of 7) on page 795
Pin	XD3-2200-102CN	Finisher main body (stapler/stacker and booklet-maker) on page 869
Pin, dowel	XD9-0240-000CN	Printer internal components (4 of 7) on page 799

www.drukparts.pl

Table 9-58 Alphabetical parts list (continued)

Description	Part number	Table and page
Pin, dowel	XD3-2200-102CN	Finisher main body (stapler/stacker and booklet-maker) on page 869
Pin, dowel	XD3-2200-142CN	Finisher main body (stapler/stacker and booklet-maker) on page 869
Pin, dowel	XD3-2300-142CN	Output bin 1 (stack upper-tray assembly) (booklet-maker) on page 877
Pin, dowel	XD3-2300-142CN	Output bin 2 (stack lower-tray assembly) (stapler/stacker and booklet-maker) on page 881
Pin, dowel	XD3-2300-202CN	Saddle assembly (booklet-maker) on page 903
Plate, control-panel grounding	RC1-9238-000CN	Printer external covers and panels on page 787
Plate, drawer-guard	RC1-9235-000CN	Printer internal components (5 of 7) on page 803
Plate, fan-fixing, front	RC1-9166-000CN	Printer internal components (5 of 7) on page 803
Plate, fixing-motor	RC1-4216-000CN	Printer internal components (4 of 7) on page 799
Plate, grounding (booklet-maker only)	4A3-1955-000CN	Finisher main body (stapler/stacker and booklet-maker) on page 869
Plate, grounding (booklet-maker only)	RC2-1536-000CN	Finisher main body (stapler/stacker and booklet-maker) on page 869
Plate, hinge-stop (booklet-maker only)	4A3-4715-000CN	Finisher main body (stapler/stacker and booklet-maker) on page 869
Plate, HVT-A (high-voltage transmission) guard	RC1-9326-000CN	Printer internal components (7 of 7) on page 807
Plate, option-tray, front	FC5-6978-000CN	Output bin 1 (stack upper-tray assembly) (stapler/stacker) on page 873
Plate, rotation	4A3-1779-000CN	Saddle assembly (booklet-maker) on page 903
Plate, sensor, front	RC1-9246-000CN	Printer internal components (5 of 7) on page 803
Plate, switch-cover	RC1-9901-000CN	Input-tray main body (1x500-sheet) on page 835
Plate, switch-cover	RC1-9901-000CN	Input-tray main body (3x500-sheet) on page 839
Plate, tension	FF5-5805-040CN	Saddle assembly (booklet-maker) on page 903

www.drukparts.pl

Table 9-58 Alphabetical parts list (continued)

Description	Part number	Table and page
Press-motor assembly	FM2-1409-000CN	Finisher main body (stapler/ stacker and booklet-maker) on page 869
Pressure-roller assembly	FM2-0730-000CN	Pressure-roller assembly (stapler/stacker and booklet-maker) on page 891
Pulley, 16T/gear, 32T	FS6-0815-000CN	Pass lower-guide assembly (booklet-maker) on page 917
Pulley, 20T	FU5-3086-000CN	Finisher main body (stapler/ stacker and booklet-maker) on page 869
Pulley, 30T	FS5-3576-000CN	Saddle assembly (booklet-maker) on page 903
Pulley, 32T/gear, 16T	FS6-0814-000CN	Pass lower-guide assembly (booklet-maker) on page 917
Pulley, 39T	FS5-3577-000CN	Saddle assembly (booklet-maker) on page 903
Rack, front	FB3-7967-000CN	Saddle assembly (booklet-maker) on page 903
Rack, rail	FC5-5486-000CN	Finisher main body (stapler/ stacker and booklet-maker) on page 869
Rack, rear	FB3-7934-000CN	Saddle assembly (booklet-maker) on page 903
Rail, cassette, left	RL1-1311-000CN	Input-tray main body (1x500-sheet) on page 835
Rail, cassette, left	RL1-1311-000CN	Input-tray main body (3x500-sheet) on page 839
Rail, cassette, right	RL1-1215-000CN	Printer internal components (5 of 7) on page 803
Rail, cassette, right	RL1-1310-000CN	Input-tray main body (1x500-sheet) on page 835
Rail, cassette, right	RL1-1310-000CN	Input-tray main body (3x500-sheet) on page 839
Rail, fixing, front	RC1-8931-000CN	Printer internal components (4 of 7) on page 799
Rail, fixing, rear	RC1-8939-000CN	Printer internal components (4 of 7) on page 799
Rail, left, top	RL1-1213-000CN	Printer internal components (5 of 7) on page 803
Rail, reverse, rear	RC1-9206-000CN	Printer internal components (2 of 7) on page 795
Rear-cover-mount plate assembly	RM1-3354-000CN	Printer internal components (6 of 7) on page 805
Rear-end sensor assembly	FM2-0763-000CN	Saddle assembly (booklet-maker) on page 903

www.drukparts.pl

Table 9-58 Alphabetical parts list (continued)

Description	Part number	Table and page
Rear-lower cable	RM1-3618-000CN	Printer internal components (6 of 7) on page 805
Rear-right cover assembly	RM1-4415-000CN	Printer external covers and panels on page 787
Rear-upper cable	RM1-3619-000CN	Printer internal components (6 of 7) on page 805
Registration 2nd-transfer assembly kit with service document	Q3931-67909	Printer internal components (3 of 7) on page 797
Retainer	RC1-8511-000CN	Printer internal components (3 of 7) on page 797
Retainer	RC1-8511-000CN	Printer multi-purpose paper-pickup assembly on page 817
Return-roller assembly	FM2-0725-090CN	Return roller assembly (stapler/stacker and booklet-maker) on page 889
Right-door assembly	RM1-3538-000CN	Input-tray main body (1x500-sheet) on page 835
Right-door assembly	RM1-3637-000CN	Input-tray main body (3x500-sheet) on page 839
Right-door sub-assembly	RM1-3333-000CN	Printer right-door assembly on page 791
Right-lower cover assembly	RL1-1280-000CN	Printer external covers and panels on page 787
Right-side wall assembly	RM1-3239-000CN	Printer internal components (1 of 7) on page 793
Ring, C, external	XD2-3100-152CN	Saddle assembly (booklet-maker) on page 903
Ring, E	XD9-0234-000CN	Printer internal components (4 of 7) on page 799
Ring, E	XD9-0234-000CN	Printer internal components (5 of 7) on page 803
Ring, E	XD9-0136-000CN	Finisher main body (stapler/stacker and booklet-maker) on page 869
Ring, E	XD9-0136-000CN	Finisher main body (stapler/stacker and booklet-maker) on page 869
Ring, E	XD9-0137-000CN	Output bin 1 (stack upper-tray assembly) (booklet-maker) on page 877
Roller, folding	4A3-1783-000CN	Saddle assembly (booklet-maker) on page 903
Roller, paper-pickup	RL1-1289-000CN	Input-tray paper-pickup assembly on page 847
Roller, rail	RC1-9231-000CN	Input-tray main body (1x500-sheet) on page 835

www.drukparts.pl

Table 9-58 Alphabetical parts list (continued)

Description	Part number	Table and page
Roller, rail	RC1-9231-000CN	Input-tray main body (3x500-sheet) on page 839
Roller, tray-guide	RU5-6035-000CN	Output bin 1 (stack upper-tray assembly) (stapler/stacker) on page 873
Roller, tray-guide	FC5-4221-000CN	Output bin 1 (stack upper-tray assembly) (booklet-maker) on page 877
Roller, tray-guide	RU5-6035-000CN	Output bin 1 (stack upper-tray assembly) (booklet-maker) on page 877
Roller, tray-guide	FC5-4221-000CN	Output bin 2 (stack lower-tray assembly) (stapler/stacker and booklet-maker) on page 881
Roller, tray-guide	RU5-6035-000CN	Output bin 2 (stack lower-tray assembly) (stapler/stacker and booklet-maker) on page 881
Saddle paper-delivery assembly	RM1-4130-000CN	Saddle assembly (booklet-maker) on page 903
Saddle paper-delivery assembly	RM1-4130-000CN	Saddle paper-delivery assembly (booklet-maker) on page 921
Saddle paper-feeder assembly	RM1-4136-000CN	Saddle paper-feeder assembly (stapler/stacker) on page 913
Saddle paper-feeder assembly	RM1-4109-000CN	Saddle paper-feeder assembly (booklet-maker) on page 915
Saddle, wire	WT2-5694-000CN	Printer internal components (4 of 7) on page 799
Saddle, wire	WT2-5694-000CN	Input-tray main body (1x500-sheet) on page 835
Saddle, wire	WT2-5694-000CN	Input-tray main body (3x500-sheet) on page 839
Saddle-controller PCA assembly	RM1-4140-000CN	Saddle assembly (booklet-maker) on page 903
Saddle-controller PCA assembly (booklet-maker)	RM1-4140-000CN	PCA assembly on page 925
Saddle-guide assembly	FM2-0756-000CN	Saddle assembly (booklet-maker) on page 903
Saddle-guide assembly	FM2-5024-000CN	Saddle-guide assembly (booklet-maker) on page 909
Saddle-motor assembly	FM2-0737-000CN	Saddle paper-feeder assembly (stapler/stacker) on page 913
Saddle-motor assembly	FM2-0737-000CN	Saddle paper-feeder assembly (booklet-maker) on page 915
Saddle-stapler assembly	RM1-4178-000CN	Saddle assembly (booklet-maker) on page 903

www.drukparts.pl

Table 9-58 Alphabetical parts list (continued)

Description	Part number	Table and page
Saddle-stapler assembly	RM1-4178-000CN	Saddle-stapler assembly (booklet-maker) on page 911
Scanner assembly kit (1 scanner assembly per kit) with service document	Q3931-67907	Printer internal components (2 of 7) on page 795
Scanner-joint cable	RM1-3620-000CN	Printer internal components (6 of 7) on page 805
Screw, machined, truss-head, M3x4	XB1-2300-407CN	Printer internal components (4 of 7) on page 799
Screw, machined, truss-head, M4x8	XB1-2400-805CN	Printer internal components (7 of 7) on page 807
Screw, RS stepped, M3	FU9-9059-000CN	Finisher main body (stapler/ stacker and booklet-maker) on page 869
Screw, RS, M13x12	XA9-1801-000CN	Printer internal components (7 of 7) on page 807
Screw, RS, M3x6	XA9-1495-000CN	Printer internal components (1 of 7) on page 793
Screw, RS, M3x6	XA9-1495-000CN	Printer internal components (2 of 7) on page 795
Screw, RS, M3x6	XA9-1495-000CN	Printer internal components (3 of 7) on page 797
Screw, RS, M3x6	XA9-1495-000CN	Printer internal components (4 of 7) on page 799
Screw, RS, M3x6	XA9-1495-000CN	Printer internal components (5 of 7) on page 803
Screw, RS, M3x6	XA9-1495-000CN	Printer internal components (6 of 7) on page 805
Screw, RS, M3x6	XA9-1495-000CN	Printer internal components (7 of 7) on page 807
Screw, RS, M3X6 (duplex)	XA9-1495-000CN	Printer right-door assembly on page 791
Screw, RS, M3x8	XA9-1504-000CN	Printer internal components (1 of 7) on page 793
Screw, RS, M3x8	XA9-1504-000CN	Printer internal components (2 of 7) on page 795
Screw, RS, M3x8	XA9-1449-000CN	Printer internal components (2 of 7) on page 795
Screw, RS, M3x8	XA9-1504-000CN	Printer internal components (3 of 7) on page 797
Screw, RS, M3x8	XA9-1504-000CN	Printer internal components (4 of 7) on page 799
Screw, RS, M3x8	XA9-1504-000CN	Printer internal components (5 of 7) on page 803
Screw, RS, M3x8	XA9-1449-000CN	Printer internal components (6 of 7) on page 805

www.drukparts.pl

Table 9-58 Alphabetical parts list (continued)

Description	Part number	Table and page
Screw, RS, M3x8	XA9-1504-000CN	Printer internal components (7 of 7) on page 807
Screw, RS, M3x8	XA9-1386-000CN	Finisher main body (stapler/ stacker and booklet-maker) on page 869
Screw, RS, M4x8	XA9-1448-000CN	Input-tray main body (1x500-sheet) on page 835
Screw, RS, M4x8	XA9-1448-000CN	Input-tray main body (1x500-sheet) on page 835
Screw, RS, M4x8	XA9-1448-000CN	Input-tray main body (3x500-sheet) on page 839
Screw, RS, M4x8	XA9-1448-000CN	Input-tray main body (3x500-sheet) on page 839
Screw, RS, M4x8 (booklet-maker only)	XA9-0732-000CN	Finisher main body (stapler/ stacker and booklet-maker) on page 869
Screw, stepped	RS5-9099-000CN	Input-tray main body (1x500-sheet) on page 835
Screw, stepped	RS5-9099-000CN	Input-tray main body (3x500-sheet) on page 839
Screw, tapping, pan-head, M4x10	XB4-7401-006CN	Input-tray main body (1x500-sheet) on page 835
Screw, tapping, truss-head, M4X10	XB4-7401-005CN	Printer external covers and panels on page 787
Screw, tapping, truss-head, M4X10	XB4-7401-005CN	Printer external covers and panels on page 787
Screw, tapping, truss-head, M4X10	XB4-7401-005CN	Printer right-door assembly on page 791
Screw, tapping, truss-head, M4x10	XB4-7401-005CN	Printer internal components (5 of 7) on page 803
Screw, TP, M3x30	XB6-7303-005CN	Printer internal components (5 of 7) on page 803
Screw, TP, M3x6	XA9-1159-000CN	Printer internal components (4 of 7) on page 799
Screw, TP, M3x6	XA9-1469-000CN	Input-tray main body (1x500-sheet) on page 835
Screw, TP, M3x6	XA9-1469-000CN	Input-tray main body (3x500-sheet) on page 839
Screw, TP, M3x6 (booklet-maker only)	XB6-7300-607CN	Finisher main body (stapler/ stacker and booklet-maker) on page 869
Screw, TP, M4x8	XA9-1300-000CN	Printer internal components (6 of 7) on page 805
Screw, with washer, M3x6	XB2-8300-607CN	Printer internal components (4 of 7) on page 799

www.drukparts.pl

Table 9-58 Alphabetical parts list (continued)

Description	Part number	Table and page
Screw, with washer, M3x6	XB2-8300-607CN	Input-tray main body (1x500-sheet) on page 835
Screw, with washer, M3x6	XB2-8300-607CN	Input-tray main body (3x500-sheet) on page 839
Screw, with washer, M4X12	XA9-1422-000CN	Printer right-door assembly on page 791
Screw, with washer, M4X12	XA9-1422-000CN	Printer right-door assembly on page 791
Screw, with washer, M5x12	XA9-0912-000CN	Input-tray main body (1x500-sheet) on page 835
Screw, with washer, M5x12	XA9-0912-000CN	Input-tray main body (3x500-sheet) on page 839
Screw, with washer, M5x12	XA9-0912-000CN	Finisher main body (stapler/stacker and booklet-maker) on page 869
Sensor unit, humidity	RK2-2376-000CN	Printer internal components (2 of 7) on page 795
Sensor/switch assembly	FM2-1417-000CN	Finisher main body (stapler/stacker and booklet-maker) on page 869
Shaft, lock	RC1-9912-000CN	Input-tray main body (1x500-sheet) on page 835
Shaft, lock	RC1-9912-000CN	Input-tray main body (3x500-sheet) on page 839
Sheet, entrance-guide	FC5-5542-000CN	Finisher main body (stapler/stacker and booklet-maker) on page 869
Sheet, fixing-crossmember	RC1-9232-000CN	Printer internal components (2 of 7) on page 795
Shutter H.P.-sensor assembly	FM2-1401-000CN	Finisher main body (stapler/stacker and booklet-maker) on page 869
Solenoid	FL2-0821-000CN	Finisher main body (stapler/stacker and booklet-maker) on page 869
Spring, leaf	RC1-9233-000CN	Printer internal components (1 of 7) on page 793
Spring, tension	RU5-2822-000CN	Printer internal components (2 of 7) on page 795
Spring, tension	RU5-2796-000CN	Printer internal components (5 of 7) on page 803
Spring, tension	4S3-2116-000CN	Saddle assembly (booklet-maker) on page 903
Spring, tension	4S3-2117-000CN	Saddle assembly (booklet-maker) on page 903

www.drukparts.pl

Table 9-58 Alphabetical parts list (continued)

Description	Part number	Table and page
Spring, tension	FS6-2582-000CN	Saddle assembly (booklet-maker) on page 903
Spring, torsion	RU5-2825-000CN	Printer internal components (2 of 7) on page 795
Spring, torsion	RC1-9244-000CN	Printer internal components (5 of 7) on page 803
Spring, torsion	FC5-5005-000CN	External panels and covers (stapler/stacker) on page 861
Spring, torsion	FC5-5005-000CN	External panels and covers (booklet-maker) on page 863
Spring, torsion	FC5-6857-000CN	Sweep-guide assembly (stapler/stacker and booklet-maker) on page 893
Spring, torsion	FB3-7980-000CN	Saddle assembly (booklet-maker) on page 903
Stack lower-tray assembly	RM1-4105-000CN	Output bin 2 (stack lower-tray assembly) (stapler/stacker and booklet-maker) on page 881
Stack sub-tray assembly	RM1-4475-000CN	Top output bin (stack sub-tray assembly) (stapler/stacker) on page 883
Stack upper-tray assembly	RM1-4101-000CN	Output bin 1 (stack upper-tray assembly) (stapler/stacker) on page 873
Stack upper-tray assembly	RM1-4102-000CN	Output bin 1 (stack upper-tray assembly) (booklet-maker) on page 877
Stack-ejection motor assembly	4G3-0769-000CN	Finisher main body (stapler/stacker and booklet-maker) on page 869
Stack-tray assembly	RM1-4104-000CN	Output bin 1 (stack upper-tray assembly) (booklet-maker) on page 877
Stack-tray assembly	RM1-4104-000CN	Output bin 2 (stack lower-tray assembly) (stapler/stacker and booklet-maker) on page 881
Staple assembly	FM2-0721-000CN	Staple assembly (stapler/stacker and booklet-maker) on page 897
Stapler sub-assembly	FM2-0722-000CN	Staple assembly (stapler/stacker and booklet-maker) on page 897
Stapler unit	FL2-0846-000CN	Saddle-stapler assembly (booklet-maker) on page 911
Stock-box assembly	RM1-3539-000CN	Input-tray main body (1x500-sheet) on page 835

www.drukparts.pl

Table 9-58 Alphabetical parts list (continued)

Description	Part number	Table and page
Stopper, right-door	RC1-9882-000CN	Input-tray main body (1x500-sheet) on page 835
Stopper, right-door	RC1-9882-000CN	Input-tray main body (3x500-sheet) on page 839
Support, door-cover (simplex)	RC1-9014-000CN	Printer right-door assembly on page 791
Support, lock-shaft	RC1-9900-000CN	Input-tray main body (1x500-sheet) on page 835
Support, lock-shaft	RC1-9900-000CN	Input-tray main body (3x500-sheet) on page 839
Support, PCA	VT2-0001-008CN	Input-tray main body (1x500-sheet) on page 835
Support, PCA	VT2-0001-008CN	Input-tray main body (3x500-sheet) on page 839
Swing-guide assembly	RM1-4108-000CN	Swing-guide assembly (stapler/stacker and booklet-maker) on page 893
Swing-press shaft assembly	FM2-1428-000CN	Finisher main body (stapler/stacker and booklet-maker) on page 869
Switch, button	VC2-5512-000CN	Input-tray main body (1x500-sheet) on page 835
Switch, button	VC2-5512-000CN	Input-tray main body (3x500-sheet) on page 839
Switchback-cover assembly	RM1-3360-000CN	Printer external covers and panels on page 787
T2 guide-arm assembly	RM1-4411-000CN	Printer internal components (7 of 7) on page 807
Tag PCA-holder assembly	RM1-4402-000CN	Printer internal components (4 of 7) on page 799
Tape, door	RC1-9884-000CN	Input-tray main body (1x500-sheet) on page 835
Tape, door	RC1-9884-000CN	Input-tray main body (3x500-sheet) on page 839
Thermistor unit	RK2-1363-000CN	Printer internal components (2 of 7) on page 795
Thermopile case assembly	RM1-3232-000CN	Printer internal components (2 of 7) on page 795
Toner cartridge drive assembly kit with service document	Q3931-67912	Printer internal components (4 of 7) on page 799
Toner cartridge drive assembly kit with service document	Q3931-67913	Printer internal components (4 of 7) on page 799
Toner-motor cable	RM1-3383-000CN	Printer internal components (4 of 7) on page 799

www.drukparts.pl

Table 9-58 Alphabetical parts list (continued)

Description	Part number	Table and page
Toner-motor cable	RM1-3385-000CN	Printer internal components (4 of 7) on page 799
Top-cover assembly	RL1-1284-000CN	Printer internal components (1 of 7) on page 793
Top-door (upper-cover) assembly	RM1-4121-000CN	External panels and covers (stapler/stacker) on page 861
Top-door (upper-cover) assembly	RM1-4121-000CN	External panels and covers (booklet-maker) on page 863
Transfer contact-holder assembly	RM1-3230-000CN	Printer internal components (1 of 7) on page 793
Tray 1 pickup, retard-roller kit	Q3931-67920	Printer multi-purpose paper-pickup assembly on page 817
Tray 2 pickup, feed-roller kit	Q3931-67919	Printer cassette paper-pickup assembly on page 815
Tray-driver PCA assembly	FG3-2887-000CN	Output bin 1 (stack upper-tray assembly) (booklet-maker) on page 877
Tray-driver PCA assembly	FG3-2887-000CN	Output bin 2 (stack lower-tray assembly) (stapler/stacker and booklet-maker) on page 881
Upper delivery-guide assembly	RM1-4131-000CN	Saddle assembly (booklet-maker) on page 903
Upper-cover lock assembly	4[illegible]3-0210-000CN	Finisher main body (stapler/stacker and booklet-maker) on page 869
Upper-crossmember assembly	RM1-4180-000CN	Finisher main body (stapler/stacker and booklet-maker) on page 869
Upper-guide assembly	RM1-3687-000CN	Intermediate-feed upper-guide assembly on page 855
Window, LED	RC2-1734-000CN	External panels and covers (booklet-maker) on page 863

www.drukparts.pl

Numerical parts list

Table 9-59 Numerical parts list

Part number	Description	Table and page
4A3-1763-000CN	Arm, adjustment, front	Saddle assembly (booklet-maker) on page 903
4A3-1764-000CN	Arm, adjustment, rear	Saddle assembly (booklet-maker) on page 903
4A3-1779-000CN	Plate, rotation	Saddle assembly (booklet-maker) on page 903
4A3-1782-000CN	Lever, stopper	Saddle assembly (booklet-maker) on page 903
4A3-1783-000CN	Roller, folding	Saddle assembly (booklet-maker) on page 903
4A3-1955-000CN	Plate, grounding (booklet-maker only)	Finisher main body (stapler/stacker and booklet-maker) on page 869
4A3-4715-000CN	Plate, hinge-stop (booklet-maker only)	Finisher main body (stapler/stacker and booklet-maker) on page 869
4G1-1498-000CN	Area-sensor PCA assembly	Output bin 1 (stack upper-tray assembly) (stapler/stacker) on page 873
4G1-1498-000CN	Area-sensor PCA assembly	Output bin 1 (stack upper-tray assembly) (booklet-maker) on page 877
4G1-1498-000CN	Area-sensor PCA assembly	Output bin 2 (stack lower-tray assembly) (stapler/stacker and booklet-maker) on page 881
4G1-2283-000CN	Cable, saddle-unit	Saddle assembly (booklet-maker) on page 903
4G1-2285-000CN	Cable, sensor	Saddle-tray assembly (booklet-maker) on page 907
4G3-0210-000CN	Upper-cover lock assembly	Finisher main body (stapler/stacker and booklet-maker) on page 869
4G3-0271-000CN	Link-slide assembly	External panels and covers (stapler/stacker) on page 861
4G3-0271-000CN	Link-slide assembly	External panels and covers (booklet-maker) on page 863
4G3-0670-000CN	Motor-mount assembly	Saddle assembly (booklet-maker) on page 903
4G3-0670-000CN	Motor-mount assembly	Motor-mount assembly (booklet-maker) on page 923
4G3-0671-000CN	Inner side-plate assembly	Saddle assembly (booklet-maker) on page 903

www.drukparts.pl

Table 9-59 Numerical parts list (continued)

Part number	Description	Table and page
4G3-0671-000CN	Inner side-plate assembly	Inner side-plate assembly (booklet-maker) on page 919
4G3-0725-000CN	Guide-motor assembly	Saddle assembly (booklet-maker) on page 903
4G3-0769-000CN	Stack-ejection motor assembly	Finisher main body (stapler/stacker and booklet-maker) on page 869
4G3-0934-000CN	Paper-face sensor assembly	External panels and covers (stapler/stacker) on page 861
4G3-0934-000CN	Paper-face sensor assembly	External panels and covers (booklet-maker) on page 863
4G3-1624-000CN	Paper-face sensing assembly	External panels and covers (stapler/stacker) on page 861
4G3-1624-000CN	Paper-face sensing assembly	External panels and covers (booklet-maker) on page 863
4G3-1777-000CN	Cable, staple-connecting assembly	Staple assembly (stapler/stacker and booklet-maker) on page 897
4H3-0370-000CN	Clutch, electromagnetic	Finisher main body (stapler/stacker and booklet-maker) on page 869
4K1-1103-000CN	Motor, stepping	Pass lower-guide assembly (booklet-maker) on page 917
4S3-0171-000CN	Gear, 50T	Saddle assembly (booklet-maker) on page 903
4S3-1050-000CN	Bearing, ball, 6902ZZNR	Saddle assembly (booklet-maker) on page 903
4S3-2116-000CN	Spring, tension	Saddle assembly (booklet-maker) on page 903
4S3-2117-000CN	Spring, tension	Saddle assembly (booklet-maker) on page 903
C8091-67901	5000-staple replacement cartridge	Staple assembly (stapler/stacker and booklet-maker) on page 897
C8091-67901	5000-staple replacement cartridge	Saddle-stapler assembly (booklet-maker) on page 911
CC383-67901	2000-staple cartridge (for booklet making)	Staple assembly (stapler/stacker and booklet-maker) on page 897
CC383-67901	2000-staple cartridge (for booklet making)	Saddle-stapler assembly (booklet-maker) on page 911
FB3-7881-000CN	Knob (booklet-maker only)	Finisher main body (stapler/stacker and booklet-maker) on page 869
FB3-7925-030CN	Flag, roller	Saddle assembly (booklet-maker) on page 903

www.drukparts.pl

Table 9-59 Numerical parts list (continued)

Part number	Description	Table and page
FB3-7928-020CN	Deflector	Saddle assembly (booklet-maker) on page 903
FB3-7934-000CN	Rack, rear	Saddle assembly (booklet-maker) on page 903
FB3-7967-000CN	Rack, front	Saddle assembly (booklet-maker) on page 903
FB3-7973-000CN	Holder, roller, 2	Saddle assembly (booklet-maker) on page 903
FB3-7979-000CN	Flag, sensor	Saddle assembly (booklet-maker) on page 903
FB3-7980-000CN	Spring, torsion	Saddle assembly (booklet-maker) on page 903
FB5-2697-000CN	Deflector	Saddle assembly (booklet-maker) on page 903
FB5-5937-020CN	Flag, sensor	Saddle assembly (booklet-maker) on page 903
FC5-3657-000CN	Limiter, torque	Finisher main body (stapler/stacker and booklet-maker) on page 869
FC5-4162-000CN	Flag, paper-face sensing, upper	External panels and covers (stapler/stacker) on page 861
FC5-4221-000CN	Roller, tray-guide	Output bin 1 (stack upper-tray assembly) (booklet-maker) on page 877
FC5-4221-000CN	Roller, tray-guide	Output bin 2 (stack lower-tray assembly) (stapler/stacker and booklet-maker) on page 881
FC5-4991-030CN	Hinge, front-door, 1	Finisher main body (stapler/stacker and booklet-maker) on page 869
FC5-4992-030CN	Hinge, front-door, 2	Finisher main body (stapler/stacker and booklet-maker) on page 869
FC5-5004-000CN	Flag, paper-sensing sensor	External panels and covers (stapler/stacker) on page 861
FC5-5004-000CN	Flag, paper-sensing sensor	External panels and covers (booklet-maker) on page 863
FC5-5005-000CN	Spring, torsion	External panels and covers (stapler/stacker) on page 861
FC5-5005-000CN	Spring, torsion	External panels and covers (booklet-maker) on page 863
FC5-5021-000CN	Claw, latch, right	Saddle assembly (booklet-maker) on page 903
FC5-5024-000CN	Knob, latch	Saddle-guide assembly (booklet-maker) on page 909

www.drukparts.pl

Table 9-59 Numerical parts list (continued)

Part number	Description	Table and page
FC5-5436-000CN	Rack, rail	Finisher main body (stapler/ stacker and booklet-maker) on page 869
FC5-5542-000CN	Sheet, entrance-guide	Finisher main body (stapler/ stacker and booklet-maker) on page 869
FC5-6857-000CN	Spring, torsion	Swing-guide assembly (stapler/stacker and booklet-maker) on page 893
FC5-6978-000CN	Plate, option-tray, front	Output bin 1 (stack upper-tray assembly) (stapler/stacker) on page 873
FF5-5805-040CN	Plate, tension	Saddle assembly (booklet-maker) on page 903
FG3-2887-000CN	Tray-driver PCA assembly	Output bin 1 (stack upper-tray assembly) (booklet-maker) on page 877
FG3-2887-000CN	Tray-driver PCA assembly	Output bin 2 (stack lower-tray assembly) (stapler/stacker and booklet-maker) on page 881
FG3-2892-000CN	Cable, solenoid	Finisher main body (stapler/ stacker and booklet-maker) on page 869
FG3-2903-000CN	Cable, operation-tray	Operation-tray assembly (stapler/stacker and booklet-maker) on page 885
FL2-0821-000CN	Solenoid	Finisher main body (stapler/ stacker and booklet-maker) on page 869
FL2-0846-000CN	Stapler unit	Saddle-stapler assembly (booklet-maker) on page 911
FM2-0707-000CN	Paper-sensor assembly	Output bin 1 (stack upper-tray assembly) (stapler/stacker) on page 873
FM2-0707-000CN	Paper-sensor assembly	Output bin 1 (stack upper-tray assembly) (booklet-maker) on page 877
FM2-0707-000CN	Paper-sensor assembly	Output bin 2 (stack lower-tray assembly) (stapler/stacker and booklet-maker) on page 881
FM2-0709-000CN	Area-sensor holder assembly	Output bin 1 (stack upper-tray assembly) (stapler/stacker) on page 873
FM2-0709-000CN	Area-sensor holder assembly	Output bin 1 (stack upper-tray assembly) (booklet-maker) on page 877
FM2-0709-000CN	Area-sensor holder assembly	Output bin 2 (stack lower-tray assembly) (stapler/stacker and booklet-maker) on page 881

www.drukparts.pl

Table 9-59 Numerical parts list (continued)

Part number	Description	Table and page
FM2-0710-000CN	Approach-switch assembly	Output bin 1 (stack upper-tray assembly) (booklet-maker) on page 877
FM2-0718-000CN	Entrance-sensor flag assembly	Finisher main body (stapler/ stacker and booklet-maker) on page 869
FM2-0720-000CN	Flexible-cable mount assembly	Finisher main body (stapler/ stacker and booklet-maker) on page 869
FM2-0721-000CN	Staple assembly	Staple assembly (stapler/ stacker and booklet-maker) on page 897
FM2-0722-000CN	Stapler sub-assembly	Staple assembly (stapler/ stacker and booklet-maker) on page 897
FM2-0725-090CN	Return-roller assembly	Return-roller assembly (stapler/stacker and booklet-maker) on page 889
FM2-0730-000CN	Pressure-roller assembly	Pressure-roller assembly (stapler/stacker and booklet-maker) on page 891
FM2-0737-000CN	Saddle-motor assembly	Saddle paper-feeder assembly (stapler/stacker) on page 913
FM2-0737-000CN	Saddle-motor assembly	Saddle paper-feeder assembly (booklet-maker) on page 915
FM2-0756-000CN	Saddle-guide assembly	Saddle assembly (booklet-maker) on page 903
FM2-0763-000CN	Rear-end sensor assembly	Saddle assembly (booklet-maker) on page 903
FM2-1401-000CN	Shutter H.P.-sensor assembly	Finisher main body (stapler/ stacker and booklet-maker) on page 869
FM2-1409-000CN	Press-motor assembly	Finisher main body (stapler/ stacker and booklet-maker) on page 869
FM2-1417-000CN	Sensor/switch assembly	Finisher main body (stapler/ stacker and booklet-maker) on page 869
FM2-1423-000CN	Swing-press shaft assembly	Finisher main body (stapler/ stacker and booklet-maker) on page 869
FM2-1639-000CN	Delivery-switch mount assembly	Saddle assembly (booklet-maker) on page 903
FM2-1708-000CN	Option-sensor assembly	Output bin 1 (stack upper-tray assembly) (stapler/stacker) on page 873
FM2-5024-000CN	Saddle-guide assembly	Saddle-guide assembly (booklet-maker) on page 909

www.drukparts.pl

Table 9-59 Numerical parts list (continued)

Part number	Description	Table and page
FS5-3576-000CN	Pulley, 30T	Saddle assembly (booklet-maker) on page 903
FS5-3577-000CN	Pulley, 39T	Saddle assembly (booklet-maker) on page 903
FS6-0814-000CN	Pulley, 32T/gear, 16T	Pass lower-guide assembly (booklet-maker) on page 917
FS6-0815-000CN	Pulley, 16T/gear, 32T	Pass lower-guide assembly (booklet-maker) on page 917
FS6-0822-000CN	Gear, 16T/33T	Saddle assembly (booklet-maker) on page 903
FS6-0823-000CN	Gear, 16T	Saddle assembly (booklet-maker) on page 903
FS6-0829-000CN	Gear, 16T/56T	Saddle assembly (booklet-maker) on page 903
FS6-0830-000CN	Gear, 16T	Saddle assembly (booklet-maker) on page 903
FS6-2582-000CN	Spring, tension	Saddle assembly (booklet-maker) on page 903
FU5-0428-000CN	Gear, 30T	Finisher main body (stapler/stacker and booklet-maker) on page 869
FU5-0435-000CN	Gear, 44T	Output bin 1 (stack upper-tray assembly) (stapler/stacker) on page 873
FU5-0435-000CN	Gear, 44T	Output bin 1 (stack upper-tray assembly) (booklet-maker) on page 877
FU5-0435-000CN	Gear, 44T	Output bin 2 (stack lower-tray assembly) (stapler/stacker and booklet-maker) on page 881
FU5-0454-000CN	Gear, 40T	Finisher main body (stapler/stacker and booklet-maker) on page 869
FU5-0457-000CN	Gear, 17T	Output bin 1 (stack upper-tray assembly) (booklet-maker) on page 877
FU5-0457-000CN	Gear, 17T	Output bin 2 (stack lower-tray assembly) (stapler/stacker and booklet-maker) on page 881
FU5-1169-000CN	Bushing	Output bin 2 (stack lower-tray assembly) (stapler/stacker and booklet-maker) on page 881
FU5-2399-000CN	Gear, 29T	Finisher main body (stapler/stacker and booklet-maker) on page 869

www.drukparts.pl

Table 9-59 Numerical parts list (continued)

Part number	Description	Table and page
FU5-3086-000CN	Pulley, 20T	Finisher main body (stapler/ stacker and booklet-maker) on page 869
FU9-9059-000CN	Screw, RS stepped, M3	Finisher main body (stapler/ stacker and booklet-maker) on page 869
Q3931-67905	Cover, face-down	Printer external covers and panels on page 787
Q3931-67907	Scanner assembly kit (1 scanner assembly per kit) with service document	Printer internal components (2 of 7) on page 795
Q3931-67909	Registration 2nd-transfer assembly kit with service document	Printer internal components (3 of 7) on page 797
Q3931-67911	Main drive-unit kit with service document	Printer internal components (4 of 7) on page 799
Q3931-67912	Toner cartridge drive assembly kit with service document	Printer internal components (4 of 7) on page 799
Q3931-67913	Toner cartridge drive assembly kit with service document	Printer internal components (4 of 7) on page 799
Q3931-67914	Fixing assembly kit, 110-127V	Printer internal components (4 of 7) on page 799
Q3931-67915	Fixing assembly kit, 220-240V	Printer internal components (4 of 7) on page 799
Q3931-67916	DC-controller kit with service document	Printer internal components (6 of 7) on page 805
Q3931-67917	Cartridge-interface assembly kit with service document	Printer internal components (7 of 7) on page 807
Q3931-67918	Cassette-assembly kit	Printer cassette on page 813
Q3931-67919	Tray 2 pickup, feed roller kit	Printer cassette paper-pickup assembly on page 815
Q3931-67920	Tray 1 pickup, retard roller kit	Printer multi-purpose paper-pickup assembly on page 817
Q3931-67921	Duplex-switchback tray assembly kit	Printer duplexing-tray assembly on page 827
Q3931-67922	DC controller kit with service document	Printer PCA assembly location on page 831
RC1-8511-000CN	Retainer	Printer internal components (3 of 7) on page 797
RC1-8511-000CN	Retainer	Printer multi-purpose paper-pickup assembly on page 817
RC1-8519-000CN	Limiter, torque	Printer multi-purpose paper-pickup assembly on page 817
RC1-8526-000CN	Guide, multi-purpose, upper	Printer multi-purpose paper-pickup assembly on page 817
RC1-8527-000CN	Cover, multi-purpose blanking	Printer right-door assembly on page 791

www.drukparts.pl

Table 9-59 Numerical parts list (continued)

Part number	Description	Table and page
RC1-8734-000CN	Bushing	Printer internal components (3 of 7) on page 797
RC1-8925-000CN	Damper, gear	Printer internal components (4 of 7) on page 799
RC1-8928-000CN	Lever, paper-sensing	Printer internal components (5 of 7) on page 803
RC1-8931-000CN	Rail, fixing, front	Printer internal components (4 of 7) on page 799
RC1-8939-000CN	Rail, fixing, rear	Printer internal components (4 of 7) on page 799
RC1-8959-000CN	Guide, face-down inner	Printer internal components (2 of 7) on page 795
RC1-8961-000CN	Duct, air	Printer internal components (4 of 7) on page 799
RC1-8964-000CN	Duct, face-down joint	Printer internal components (4 of 7) on page 799
RC1-9014-000CN	Support, door-cover (simplex)	Printer right-door assembly on page 791
RC1-9043-000CN	Band, door	Printer front-door assembly on page 789
RC1-9185-000CN	Guide, intermediate transfer belt (ITB)-entrance, front	Printer internal components (3 of 7) on page 797
RC1-9186-000CN	Guide, intermediate transfer belt (ITB)-entrance, rear	Printer internal components (3 of 7) on page 797
RC1-9189-000CN	Arm, 1st-estrangement	Printer internal components (3 of 7) on page 797
RC1-9190-000CN	Plate, fan-fixing, front	Printer internal components (5 of 7) on page 803
RC1-9201-000CN	Cover, cassette back-end	Printer internal components (5 of 7) on page 803
RC1-9206-000CN	Rail, reverse, rear	Printer internal components (2 of 7) on page 795
RC1-9208-000CN	Foot, rubber	Printer internal components (6 of 7) on page 805
RC1-9211-000CN	Cover, main-switch	Printer internal components (7 of 7) on page 807
RC1-9220-000CN	Lever, door-interlock shutter	Printer internal components (5 of 7) on page 803
RC1-9231-000CN	Roller, rail	Input-tray main body (1x500-sheet) on page 835
RC1-9231-000CN	Roller, rail	Input-tray main body (3x500-sheet) on page 839
RC1-9232-000CN	Sheet, fixing-crossmember	Printer internal components (2 of 7) on page 795

www.drukparts.pl

Table 9-59 Numerical parts list (continued)

Part number	Description	Table and page
RC1-9233-000CN	Spring, leaf	Printer internal components (1 of 7) on page 793
RC1-9235-000CN	Plate, drawer-guard	Printer internal components (5 of 7) on page 803
RC1-9238-000CN	Plate, control-panel grounding	Printer external covers and panels on page 787
RC1-9244-000CN	Spring, torsion	Printer internal components (5 of 7) on page 803
RC1-9246-000CN	Plate, sensor, front	Printer internal components (5 of 7) on page 803
RC1-9260-000CN	Holder, scanner-thermistor	Printer internal components (2 of 7) on page 795
RC1-9261-000CN	Clamp, formatter cable	Printer internal components (7 of 7) on page 807
RC1-9276-000CN	Duct, cartridge	Printer internal components (4 of 7) on page 799
RC1-9277-000CN	Holder, cartridge-fan	Printer internal components (4 of 7) on page 799
RC1-9278-000CN	Holder, fixing-fan	Printer internal components (4 of 7) on page 799
RC1-9279-000CN	Holder, scanner-fan	Printer internal components (4 of 7) on page 799
RC1-9300-000CN	Button, main-switch	Printer internal components (7 of 7) on page 807
RC1-9306-000CN	Guide, cable, A	Printer internal components (7 of 7) on page 807
RC1-9307-000CN	Guide, cable, B	Printer internal components (6 of 7) on page 805
RC1-9308-000CN	Guide, cable, C	Printer internal components (6 of 7) on page 805
RC1-9309-000CN	Duct, scanner-fan	Printer internal components (4 of 7) on page 799
RC1-9312-000CN	Guide, cable, D	Printer internal components (6 of 7) on page 805
RC1-9313-000CN	Filter unit, air	Printer external covers and panels on page 787
RC1-9318-000CN	Guide, cable, E	Printer internal components (6 of 7) on page 805
RC1-9323-000CN	Guide, cable, F	Printer internal components (7 of 7) on page 807
RC1-9324-000CN	Holder, environment-sensor	Printer internal components (2 of 7) on page 795
RC1-9326-000CN	Plate, HVT-A (high-voltage transmission) guard	Printer internal components (7 of 7) on page 807

www.drukparts.pl

Table 9-59 Numerical parts list (continued)

Part number	Description	Table and page
RC1-9328-000CN	Holder, high-voltage-connector	Printer internal components (7 of 7) on page 807
RC1-9329-000CN	Guide, cable	Printer internal components (6 of 7) on page 805
RC1-9332-000CN	Guide, fixing-cable	Printer internal components (7 of 7) on page 807
RC1-9334-000CN	Duct, scanner	Printer internal components (2 of 7) on page 795
RC1-9336-000CN	Cover, left	Printer external covers and panels on page 787
RC1-9339-000CN	Cover, right-upper	Printer external covers and panels on page 787
RC1-9341-000CN	Cover, panel	Printer external covers and panels on page 787
RC1-9342-000CN	Cover, rear-upper	Printer external covers and panels on page 787
RC1-9344-000CN	Cover, rear-left	Printer external covers and panels on page 787
RC1-9348-000CN	Cover, internal, right	Printer internal components (3 of 7) on page 797
RC1-9354-000CN	Block, reinforcement (simplex)	Printer internal components (2 of 7) on page 795
RC1-9360-000CN	Cover, face-down drive	Printer external covers and panels on page 787
RC1-9362-000CN	Cover, blanking (simplex)	Printer external covers and panels on page 787
RC1-9511-000CN	Cover, motor	Printer right-door assembly on page 791
RC1-9667-000CN	Cover, intermediate-feed SW.	Intermediate-feed main body on page 851
RC1-9674-000CN	Belt, paper-feed, cogged	Intermediate-feed main body on page 851
RC1-9871-000CN	Cover, rear	Input-tray main body (1x500-sheet) on page 835
RC1-9871-000CN	Cover, rear	Input-tray main body (3x500-sheet) on page 839
RC1-9872-000CN	Cover, left	Input-tray main body (1x500-sheet) on page 835
RC1-9872-000CN	Cover, left	Input-tray main body (3x500-sheet) on page 839
RC1-9873-000CN	Cover, front-upper	Input-tray main body (1x500-sheet) on page 835
RC1-9873-000CN	Cover, front-upper	Input-tray main body (3x500-sheet) on page 839

www.drukparts.pl

Table 9-59 Numerical parts list (continued)

Part number	Description	Table and page
RC1-9874-000CN	Cover, right-lower	Input-tray main body (1x500-sheet) on page 835
RC1-9874-000CN	Cover, right-lower	Input-tray main body (3x500-sheet) on page 839
RC1-9881-000CN	Guide, paper-feed roller	Input-tray main body (1x500-sheet) on page 835
RC1-9881-000CN	Guide, paper-feed roller	Input-tray main body (3x500-sheet) on page 839
RC1-9882-000CN	Stopper, right-door	Input-tray main body (1x500-sheet) on page 835
RC1-9882-000CN	Stopper, right-door	Input-tray main body (3x500-sheet) on page 839
RC1-9883-000CN	Lever, lock	Input-tray main body (1x500-sheet) on page 835
RC1-9883-000CN	Lever, lock	Input-tray main body (3x500-sheet) on page 839
RC1-9884-000CN	Tape, door	Input-tray main body (1x500-sheet) on page 835
RC1-9884-000CN	Tape, door	Input-tray main body (3x500-sheet) on page 839
RC1-9896-000CN	Caster, double-lock, front	Input-tray main body (1x500-sheet) on page 835
RC1-9896-000CN	Caster, double-lock, front	Input-tray main body (3x500-sheet) on page 839
RC1-9900-000CN	Support, lock-shaft	Input-tray main body (1x500-sheet) on page 835
RC1-9900-000CN	Support, lock-shaft	Input-tray main body (3x500-sheet) on page 839
RC1-9901-000CN	Plate, switch-cover	Input-tray main body (1x500-sheet) on page 835
RC1-9901-000CN	Plate, switch-cover	Input-tray main body (3x500-sheet) on page 839
RC1-9912-000CN	Shaft, lock	Input-tray main body (1x500-sheet) on page 835
RC1-9912-000CN	Shaft, lock	Input-tray main body (3x500-sheet) on page 839
RC1-9913-000CN	Arm, lock	Input-tray main body (1x500-sheet) on page 835
RC1-9913-000CN	Arm, lock	Input-tray main body (3x500-sheet) on page 839
RC1-9915-000CN	Bushing	Input-tray main body (1x500-sheet) on page 835
RC1-9915-000CN	Bushing	Input-tray main body (3x500-sheet) on page 839

www.drukparts.pl

Table 9-59 Numerical parts list (continued)

Part number	Description	Table and page
RC1-9917-000CN	Caster, rear	Input-tray main body (1x500-sheet) on page 835
RC1-9917-000CN	Caster, rear	Input-tray main body (3x500-sheet) on page 839
RC1-9921-000CN	Door, stock	Input-tray main body (1x500-sheet) on page 835
RC2-1278-000CN	Cover, rear	External panels and covers (stapler/stacker) on page 861
RC2-1278-000CN	Cover, rear	External panels and covers (booklet-maker) on page 863
RC2-1279-000CN	Cover, tray-connector	External panels and covers (stapler/stacker) on page 861
RC2-1279-000CN	Cover, tray-connector	External panels and covers (booklet-maker) on page 863
RC2-1280-000CN	Cover, left-lower	External panels and covers (booklet-maker) on page 863
RC2-1283-000CN	Panel, height, upper	External panels and covers (stapler/stacker) on page 861
RC2-1283-000CN	Panel, height, upper	External panels and covers (booklet-maker) on page 863
RC2-1284-000CN	Guide, side-wall	External panels and covers (booklet-maker) on page 863
RC2-1293-000CN	Arm, paper-delivery gate	Swing-guide assembly (stapler/stacker and booklet-maker) on page 893
RC2-1315-000CN	Caster, universal	Finisher main body (stapler/stacker and booklet-maker) on page 869
RC2-1347-000CN	Cover, option-slide	External panels and covers (stapler/stacker) on page 861
RC2-1351-000CN	Cover, internal, lower (stapler/stacker only)	Finisher main body (stapler/stacker and booklet-maker) on page 869
RC2-1536-000CN	Plate, grounding (booklet-maker only)	Finisher main body (stapler/stacker and booklet-maker) on page 869
RC2-1734-000CN	Window, LED	External panels and covers (booklet-maker) on page 863
RC2-1735-000CN	Mount, LED-PCA	External panels and covers (stapler/stacker) on page 861
RK2-1320-000CN	Motor, stepping, DC	Intermediate-feed main body on page 851
RK2-1331-000CN	Motor, stepping, DC	Input-tray main body (1x500-sheet) on page 835
RK2-1331-000CN	Motor, stepping, DC	Input-tray main body (3x500-sheet) on page 839

www.drukparts.pl

Table 9-59 Numerical parts list (continued)

Part number	Description	Table and page
RK2-1354-000CN	Cable, laser flexible flat	Printer internal components (2 of 7) on page 795
RK2-1355-000CN	Cable, laser flexible flat	Printer internal components (2 of 7) on page 795
RK2-1356-000CN	Cable, flexible flat	Printer internal components (6 of 7) on page 805
RK2-1363-000CN	Thermistor unit	Printer internal components (2 of 7) on page 795
RK2-1366-000CN	Motor, stepping, DC	Printer internal components (4 of 7) on page 799
RK2-1370-000CN	Motor, stepping, DC	Printer internal components (4 of 7) on page 799
RK2-1377-000CN	Fan	Printer internal components (4 of 7) on page 799
RK2-1378-000CN	Fan	Printer internal components (4 of 7) on page 799
RK2-1378-000CN	Fan	Printer internal components (5 of 7) on page 803
RK2-1378-000CN	Fan	Printer duplexing-reverse assembly on page 825
RK2-1382-000CN	Fan	Printer internal components (4 of 7) on page 799
RK2-2376-000CN	Sensor unit, humidity	Printer internal components (2 of 7) on page 795
RL1-1210-000CN	Cover, rear	Printer external covers and panels on page 787
RL1-1213-000CN	Rail, left, top	Printer internal components (5 of 7) on page 803
RL1-1215-000CN	Rail, cassette, right	Printer internal components (5 of 7) on page 803
RL1-1216-000CN	Plate, fixing, rear	Printer internal components (4 of 7) on page 799
RL1-1280-000CN	Right-lower cover assembly	Printer external covers and panels on page 787
RL1-1283-000CN	Guide, multi-purpose, right	Printer internal components (2 of 7) on page 795
RL1-1284-000CN	Top-cover assembly	Printer internal components (1 of 7) on page 793
RL1-1289-000CN	Roller, paper-pickup	Input-tray paper-pickup assembly on page 847
RL1-1310-000CN	Rail, cassette, right	Input-tray main body (1x500-sheet) on page 835
RL1-1310-000CN	Rail, cassette, right	Input-tray main body (3x500-sheet) on page 839

www.drukparts.pl

Table 9-59 Numerical parts list (continued)

Part number	Description	Table and page
RL1-1311-000CN	Rail, cassette, left	Input-tray main body (1x500-sheet) on page 835
RL1-1311-000CN	Rail, cassette, left	Input-tray main body (3x500-sheet) on page 839
RL1-1321-000CN	Cover, right-front	Input-tray main body (3x500-sheet) on page 839
RL1-1322-000CN	Cover, right-front	Input-tray main body (1x500-sheet) on page 835
RL1-1335-000CN	Guide, duplexing-feed, upper (duplex)	Printer right-door assembly on page 791
RL1-1477-000CN	Cover, internal, lower (booklet-maker only)	Finisher main body (stapler/stacker and booklet-maker) on page 869
RL1-1717-000CN	Cover, front-lower	External panels and covers (stapler/stacker) on page 861
RL1-1717-000CN	Cover, front-lower	External panels and covers (booklet-maker) on page 863
RL1-1718-000CN	Cover, rear-lower	External panels and covers (stapler/stacker) on page 861
RL1-1718-000CN	Cover, rear-lower	External panels and covers (booklet-maker) on page 863
RL1-2210-000CN	Cover, option-tray, front	Output bin 1 (stack upper-tray assembly) (stapler/stacker) on page 873
RM1-0037-020CN	Paper feed-roller assembly	Input-tray paper-pickup assembly on page 847
RM1-3206-000CN	Cassette paper-pickup assembly (includes 1 pick and 2 feed rollers)	Printer cassette paper-pickup assembly on page 815
RM1-3215-000CN	Intermediate transfer belt (ITB) lock-support rear assembly	Printer internal components (3 of 7) on page 797
RM1-3217-000CN	Fixing-motor cable	Printer internal components (6 of 7) on page 805
RM1-3218-000CN	Fixing power-supply assembly	Printer internal components (7 of 7) on page 807
RM1-3218-000CN	Fixing power-supply assembly	Printer PCA assembly location on page 831
RM1-3222-020CN	Lifter-drive-assembly kit	Printer lifter-drive assembly on page 811
RM1-3225-000CN	Grip-support front assembly	Printer internal components (2 of 7) on page 795
RM1-3226-000CN	Grip-support rear assembly	Printer internal components (2 of 7) on page 795
RM1-3228-000CN	Intermediate transfer belt (ITB) lock-support front assembly	Printer internal components (3 of 7) on page 797

www.dukparts.ru

Table 9-59 Numerical parts list (continued)

Part number	Description	Table and page
RM1-3230-000CN	Transfer contact-holder assembly	Printer internal components (1 of 7) on page 793
RM1-3232-000CN	Thermopile case assembly	Printer internal components (2 of 7) on page 795
RM1-3233-000CN	Left-side wall assembly	Printer internal components (1 of 7) on page 793
RM1-3235-000CN	Partition-plate assembly, yellow	Printer internal components (1 of 7) on page 793
RM1-3237-000CN	Partition-plate assembly, magenta	Printer internal components (1 of 7) on page 793
RM1-3238-000CN	Partition-plate assembly, cyan	Printer internal components (1 of 7) on page 793
RM1-3239-000CN	Right-side wall assembly	Printer internal components (1 of 7) on page 793
RM1-3240-000CN	Intermediate transfer belt (ITB)-drawer assembly	Printer internal components (3 of 7) on page 797
RM1-3247-000CN	Fixing one-way gear assembly	Printer internal components (4 of 7) on page 799
RM1-3250-000CN	Photosensor assembly	Printer internal components (2 of 7) on page 795
RM1-3252-000CN	Main switch-holder assembly	Printer internal components (7 of 7) on page 807
RM1-3253-000CN	Formatter-case assembly	Printer internal components (6 of 7) on page 805
RM1-3254-000CN	Cartridge contact-holder assembly	Printer internal components (7 of 7) on page 807
RM1-3258-000CN	Color-plane-registration sensor assembly	Printer internal components (3 of 7) on page 797
RM1-3280-000CN	Intermediate transfer belt (ITB) estrangement-drive assembly	Printer internal components (3 of 7) on page 797
RM1-3286-000CN	Drum-motor assembly	Printer internal components (4 of 7) on page 799
RM1-3291-000CN	Multi-purpose-guide assembly	Printer multi-purpose-guide assembly on page 821
RM1-3293-000CN	Face-down paper-delivery assembly	Printer face-down paper-delivery assembly on page 823
RM1-3307-000CN	Intermediate transfer belt (ITB) assembly	Printer internal components (3 of 7) on page 797
RM1-3319-000CN	2nd-transfer-roller assembly	Printer internal components (3 of 7) on page 797
RM1-3333-000CN	Right-door sub-assembly	Printer right-door assembly on page 791
RM1-3340-000CN	Face-down end-tray assembly	Printer external covers and panels on page 787

www.drukparts.pl

Table 9-59 Numerical parts list (continued)

Part number	Description	Table and page
RM1-3341-000CN	Multi-purpose-tray assembly	Printer multi-purpose-tray assembly on page 819
RM1-3345-000CN	Multi-purpose paper-pickup assembly	Printer multi-purpose paper-pickup assembly on page 817
RM1-3354-000CN	Rear-cover-mount plate assembly	Printer internal components (6 of 7) on page 805
RM1-3356-000CN	Front-door assembly	Printer front-door assembly on page 789
RM1-3360-000CN	Switchback-cover assembly	Printer external covers and panels on page 787
RM1-3364-000CN	Fan assembly	Printer internal components (2 of 7) on page 795
RM1-3366-000CN	Multi-purpose-drive assembly	Printer multi-purpose-drive assembly on page 809
RM1-3383-000CN	Toner-motor cable	Printer internal components (4 of 7) on page 799
RM1-3385-000CN	Toner-motor cable	Printer internal components (4 of 7) on page 799
RM1-3389-000CN	Panel cable	Printer internal components (6 of 7) on page 805
RM1-3390-000CN	Face-down unit-1 cable	Printer internal components (7 of 7) on page 807
RM1-3391-000CN	Face-down unit-2 cable	Printer internal components (7 of 7) on page 807
RM1-3529-000CN	Cassette (1x500-sheet)	Input-tray cassette on page 845
RM1-3529-000CN	Cassette (3x500-sheet)	Input-tray cassette on page 845
RM1-3531-040CN	Auto-close assembly, 1x500-sheet	Input-tray auto-close assembly on page 843
RM1-3531-040CN	Auto-close assembly, 3x500-sheet	Input-tray auto-close assembly on page 843
RM1-3533-000CN	Paper-pickup assembly (1x500-sheet)	Input-tray paper-pickup assembly on page 847
RM1-3533-000CN	Paper-pickup assembly (3x500-sheet)	Input-tray paper-pickup assembly on page 847
RM1-3537-000CN	Right-door assembly	Input-tray main body (3x500-sheet) on page 839
RM1-3538-000CN	Right-door assembly	Input-tray main body (1x500-sheet) on page 835
RM1-3539-000CN	Stock-box assembly	Input-tray main body (1x500-sheet) on page 835
RM1-3559-000CN	Intermediate paper-transfer unit (IPTU)-driver PCA assembly	Intermediate-feed main body on page 851

www.drukparts.pl

Table 9-59 Numerical parts list (continued)

Part number	Description	Table and page
RM1-3559-000CN	Intermediate paper-transfer unit (IPTU)-driver PCA assembly	PCA assembly on page 857
RM1-3569-000CN	Paper-feed PCA assembly	Input-tray main body (1x500-sheet) on page 835
RM1-3569-000CN	Paper-feed PCA assembly	Input-tray main body (3x500-sheet) on page 839
RM1-3569-000CN	Paper-feed PCA assembly (1x500-sheet)	Input-tray PCA assembly on page 849
RM1-3569-000CN	Paper-feed PCA assembly (3x500-sheet)	Input-tray PCA assembly on page 849
RM1-3570-000CN	Option paper-sensor PCA assembly	Input-tray paper-pickup assembly on page 847
RM1-3571-000CN	Cable, pickup-option drawer	Input-tray main body (1x500-sheet) on page 835
RM1-3571-000CN	Cable, paper-pickup-option drawer	Input-tray main body (3x500-sheet) on page 839
RM1-3572-000CN	Cable, pickup-option door switch	Input-tray main body (1x500-sheet) on page 835
RM1-3572-000CN	Cable, pickup-option door switch	Input-tray main body (3x500-sheet) on page 839
RM1-3573-000CN	Cable, pickup-option PCA connect	Input-tray main body (3x500-sheet) on page 839
RM1-3574-000CN	Cable, option-sensor PCA connect	Input-tray main body (1x500-sheet) on page 835
RM1-3574-000CN	Cable, option-sensor PCA connect	Input-tray main body (3x500-sheet) on page 839
RM1-3575-000CN	Cable, paper-pickup option	Input-tray main body (1x500-sheet) on page 835
RM1-3575-000CN	Cable, paper-pickup option	Input-tray main body (3x500-sheet) on page 839
RM1-3576-000CN	Cable, pickup-option lifter unit	Input-tray auto-close assembly on page 843
RM1-3582-000CN	High-voltage-transfer A PCA assembly	Printer internal components (7 of 7) on page 807
RM1-3582-000CN	High-voltage-transfer A PCA assembly	Printer PCA assembly location on page 831
RM1-3585-000CN	Memory-tag PCA assembly	Printer internal components (4 of 7) on page 799
RM1-3585-000CN	Memory-tag PCA assembly	Printer PCA assembly location on page 831
RM1-3589-000CN	Interlock-switch assembly	Printer internal components (2 of 7) on page 795
RM1-3594-000CN	Low-voltage power-supply assembly	Printer internal components (5 of 7) on page 803

www.drukparts.pl

Table 9-59 Numerical parts list (continued)

Part number	Description	Table and page
RM1-3594-000CN	Low-voltage power-supply assembly	Printer PCA assembly location on page 831
RM1-3610-000CN	DC-controller power cable	Printer internal components (6 of 7) on page 805
RM1-3612-000CN	Fixing-joint cable	Printer internal components (7 of 7) on page 807
RM1-3617-000CN	Front cable	Printer internal components (6 of 7) on page 805
RM1-3618-000CN	Rear-lower cable	Printer internal components (6 of 7) on page 805
RM1-3619-000CN	Rear-upper cable	Printer internal components (6 of 7) on page 805
RM1-3620-000CN	Scanner-joint cable	Printer internal components (6 of 7) on page 805
RM1-3622-000CN	Panel-joint cable	Printer internal components (6 of 7) on page 805
RM1-3623-000CN	Interface-joint cable	Printer internal components (6 of 7) on page 805
RM1-3624-000CN	Color-plane-registration joint cable	Printer internal components (6 of 7) on page 805
RM1-3630-000CN	Multi-tray cable	Printer multi-purpose-tray assembly on page 819
RM1-3652-000CN	Duplexing-reverse assembly	Printer duplexing-reverse assembly on page 825
RM1-3665-000CN	Duplexing-feed assembly	Printer duplexing-feed assembly on page 829
RM1-3684-000CN	Drive-belt assembly	Intermediate-feed main body on page 851
RM1-3685-000CN	Fin-lock assembly	Intermediate-feed main body on page 851
RM1-3686-000CN	Lower-guide assembly	Intermediate-feed lower-guide assembly on page 853
RM1-3687-000CN	Upper-guide assembly	Intermediate-feed upper-guide assembly on page 855
RM1-3688-000CN	Damper assembly	Intermediate-feed main body on page 851
RM1-4101-000CN	Stack upper-tray assembly	Output bin 1 (stack upper-tray assembly) (stapler/stacker) on page 873
RM1-4102-000CN	Stack upper-tray assembly	Output bin 1 (stack upper-tray assembly) (booklet-maker) on page 877
RM1-4104-000CN	Stack-tray assembly	Output bin 1 (stack upper-tray assembly) (booklet-maker) on page 877

www.drukparts.pl

Table 9-59 Numerical parts list (continued)

Part number	Description	Table and page
RM1-4104-000CN	Stack-tray assembly	Output bin 2 (stack lower-tray assembly) (stapler/stacker and booklet-maker) on page 881
RM1-4105-000CN	Stack lower-tray assembly	Output bin 2 (stack lower-tray assembly) (stapler/stacker and booklet-maker) on page 881
RM1-4107-000CN	Area-sensor flag assembly	Finisher main body (stapler/stacker and booklet-maker) on page 869
RM1-4108-000CN	Swing-guide assembly	Swing-guide assembly (stapler/stacker and booklet-maker) on page 893
RM1-4109-000CN	Saddle paper-feeder assembly	Saddle paper-feeder assembly (booklet-maker) on page 915
RM1-4110-000CN	Entrance lower-guide assembly	Saddle paper-feeder assembly (stapler/stacker) on page 913
RM1-4110-000CN	Entrance lower-guide assembly	Saddle paper-feeder assembly (booklet-maker) on page 915
RM1-4113-000CN	Booklet-output bin (saddle-tray assembly)	Saddle-tray assembly (booklet-maker) on page 907
RM1-4115-000CN	Stack sub-tray assembly	Top output bin (stack sub-tray assembly) (stapler/stacker) on page 883
RM1-4119-000CN	Middle-height cover assembly	External panels and covers (booklet-maker) on page 863
RM1-4121-000CN	Top-door (upper-cover) assembly	External panels and covers (stapler/stacker) on page 861
RM1-4121-000CN	Top-door (upper-cover) assembly	External panels and covers (booklet-maker) on page 863
RM1-4122-000CN	Front-door assembly	External panels and covers (booklet-maker) on page 863
RM1-4123-000CN	Inner-cover assembly	Finisher main body (stapler/stacker and booklet-maker) on page 869
RM1-4125-000CN	Operation-tray assembly	Operation-tray assembly (stapler/stacker and booklet-maker) on page 885
RM1-4128-000CN	Cable-mount lattice assembly	Finisher main body (stapler/stacker and booklet-maker) on page 869
RM1-4129-000CN	Left-upper cover assembly	External panels and covers (booklet-maker) on page 863
RM1-4130-000CN	Saddle paper-delivery assembly	Saddle assembly (booklet-maker) on page 903
RM1-4130-000CN	Saddle paper-delivery assembly	Saddle paper-delivery assembly (booklet-maker) on page 921

www.dukparts.ru

Table 9-59 Numerical parts list (continued)

Part number	Description	Table and page
RM1-4131-000CN	Upper delivery-guide assembly	Saddle assembly (booklet-maker) on page 903
RM1-4134-000CN	Front-door assembly	External panels and covers (stapler/stacker) on page 861
RM1-4135-000CN	Lower height-guide assembly	External panels and covers (stapler/stacker) on page 861
RM1-4136-000CN	Saddle paper-feeder assembly	Saddle paper-feeder assembly (stapler/stacker) on page 913
RM1-4139-000CN	Main controller PCA assembly (stapler/stacker and booklet-maker)	PCA assembly on page 925
RM1-4140-000CN	Saddle-controller PCA assembly	Saddle assembly (booklet-maker) on page 903
RM1-4140-000CN	Saddle-controller PCA assembly (booklet-maker)	PCA assembly on page 925
RM1-4141-000CN	LED-PCA assembly	External panels and covers (stapler/stacker) on page 861
RM1-4141-000CN	LED-PCA assembly	External panels and covers (booklet-maker) on page 863
RM1-4172-000CN	Entrance upper-guide assembly	Entrance upper-guide assembly (stapler/stacker and booklet-maker) on page 895
RM1-4175-000CN	Paper-feeder motor assembly	Paper-feeder motor assembly (stapler/stacker and booklet-maker) on page 887
RM1-4178-000CN	Saddle-stapler assembly	Saddle assembly (booklet-maker) on page 903
RM1-4178-000CN	Saddle-stapler assembly	Saddle-stapler assembly (booklet-maker) on page 911
RM1-4179-000CN	Left upper-cover assembly	External panels and covers (stapler/stacker) on page 861
RM1-4180-000CN	Upper-crossmember assembly	Finisher main body (stapler/stacker and booklet-maker) on page 869
RM1-4391-000CN	Face-down full-flag assembly	Printer face-down paper-delivery assembly on page 823
RM1-4400-000CN	Guide-sensor assembly	Printer internal components (5 of 7) on page 803
RM1-4401-000CN	Intermediate transfer belt (ITB) duct assembly	Printer internal components (5 of 7) on page 803
RM1-4402-000CN	Tag PCA-holder assembly	Printer internal components (4 of 7) on page 799
RM1-4407-000CN	Paper-delivery-guide assembly	Printer face-down paper-delivery assembly on page 823
RM1-4409-000CN	Fixing-bias cable assembly	Printer internal components (7 of 7) on page 807

www.drukparts.pl

Table 9-59 Numerical parts list (continued)

Part number	Description	Table and page
RM1-4411-000CN	T2 guide-arm assembly	Printer internal components (7 of 7) on page 807
RM1-4415-000CN	Rear-right cover assembly	Printer external covers and panels on page 787
RM1-4516-000CN	Control-panel unit	Printer external covers and panels on page 787
RM1-4519-000CN	DC motor assembly	Printer internal components (4 of 7) on page 799
RM1-5029-000CN	Cable, fixing open-sensor	Printer internal components (5 of 7) on page 803
RM1-5030-000CN	Cable TP/T2 open-sensor	Printer internal components (7 of 7) on page 807
RM1-5475-000CN	High-voltage transfer B PCA assembly	Printer internal components (1 of 7) on page 793
RM1-5475-000CN	High-voltage-transfer B PCA assembly	Printer PCA assembly location on page 831
RM1-5950-000CN	Fixing-fan cover assembly	Printer external covers and panels on page 787
RS5-9099-000CN	Screw, stepped	Input-tray main body (1x500-sheet) on page 835
RS5-9099-000CN	Screw, stepped	Input-tray main body (3x500-sheet) on page 839
RU5-0790-000CN	Gear, 83T/25T	Printer internal components (4 of 7) on page 799
RU5-0791-000CN	Gear, 34T	Printer internal components (4 of 7) on page 799
RU5-2796-000CN	Spring, tension	Printer internal components (5 of 7) on page 803
RU5-2822-000CN	Spring, tension	Printer internal components (2 of 7) on page 795
RU5-2825-000CN	Spring, torsion	Printer internal components (2 of 7) on page 795
RU5-6035-000CN	Roller, tray-guide	Output bin 1 (stack upper-tray assembly) (stapler/stacker) on page 873
RU5-6035-000CN	Roller, tray-guide	Output bin 1 (stack upper-tray assembly) (booklet-maker) on page 877
RU5-6035-000CN	Roller, tray-guide	Output bin 2 (stack lower-tray assembly) (stapler/stacker and booklet-maker) on page 881
VS1-7177-002CN	Connector, snap-tight	Printer internal components (2 of 7) on page 795
VS1-7177-003CN	Connector, snap-tight	Printer internal components (4 of 7) on page 799

www.drukparts.pl

Table 9-59 Numerical parts list (continued)

Part number	Description	Table and page
VS1-7257-012CN	Connector, drawer	Input-tray main body (1x500-sheet) on page 835
VS1-7257-012CN	Connector, drawer	Input-tray main body (3x500-sheet) on page 839
VS1-7258-000CN	Connector, drawer	Printer internal components (5 of 7) on page 803
VT2-0001-008CN	Support, PCA	Input-tray main body (1x500-sheet) on page 835
VT2-0001-008CN	Support, PCA	Input-tray main body (3x500-sheet) on page 839
WC2-5512-000CN	Switch, button	Input-tray main body (1x500-sheet) on page 835
WC2-5512-000CN	Switch, button	Input-tray main body (3x500-sheet) on page 839
WG8-5593-000CN	Photo interrupter, TLP1242	External panels and covers (stapler/stacker) on page 861
WG8-5593-000CN	Photo interrupter, TLP1242	External panels and covers (booklet-maker) on page 863
WG8-5593-000CN	Photo interrupter, TLP1242	Finisher main body (stapler/stacker and booklet-maker) on page 869
WG8-5593-000CN	Photo interrupter, TLP1242	Output bin 1 (stack upper-tray assembly) (stapler/stacker) on page 873
WG8-5593-000CN	Photo interrupter, TLP1242	Operation-tray assembly (stapler/stacker and booklet-maker) on page 885
WG8-5593-000CN	Photo interrupter, TLP1242	Operation-tray assembly (stapler/stacker and booklet-maker) on page 885
WG8-5593-000CN	Photo interrupter, TLP1242	Saddle assembly (booklet-maker) on page 903
WG8-5593-000CN	Photo interrupter, TLP1242	Saddle assembly (booklet-maker) on page 903
WG8-5593-000CN	Photo interrupter, TLP1242	Saddle assembly (booklet-maker) on page 903
WG8-5593-000CN	Photo interrupter, TLP1242	Saddle assembly (booklet-maker) on page 903
WG8-5593-000CN	Photo interrupter, TLP1242	Saddle-tray assembly (booklet-maker) on page 907
WG8-5593-000CN	Photo interrupter, TLP1242	Saddle paper-feeder assembly (booklet-maker) on page 915
WG8-5593-000CN	Photo interrupter, TLP1242	Pass lower-guide assembly (booklet-maker) on page 917
WG8-5593-000CN	Photo interrupter, TLP1242	Inner side-plate assembly (booklet-maker) on page 919

www.drukparts.pl

Table 9-59 Numerical parts list (continued)

Part number	Description	Table and page
WG8-5593-000CN	Photo interrupter, TLP1242	Saddle paper-delivery assembly (booklet-maker) on page 921
WG8-5696-000CN	Photo interrupter, TLP1243	Printer internal components (2 of 7) on page 795
WG8-5696-000CN	Photo interrupter, TLP1243	Printer internal components (5 of 7) on page 803
WG8-5696-000CN	Photo interrupter, TLP1243	Printer internal components (7 of 7) on page 807
WG8-5696-000CN	Photo interrupter, TLP1243	Printer multi-purpose-guide assembly on page 821
WG8-5696-000CN	Photo interrupter, TLP1243	Printer face-down paper-delivery assembly on page 823
WG8-5696-000CN	Photo interrupter, TLP1243	Printer duplexing-reverse assembly on page 825
WT2-5694-000CN	Saddle, wire	Printer internal components (4 of 7) on page 799
WT2-5694-000CN	Saddle, wire	Input-tray main body (1x500-sheet) on page 835
WT2-5694-000CN	Saddle, wire	Input-tray main body (3x500-sheet) on page 839
WT2-5738-000CN	Clamp, cable	Input-tray main body (1x500-sheet) on page 835
WT2-5738-000CN	Clamp, cable	Input-tray main body (3x500-sheet) on page 839
WT2-5912-000CN	Clamp, FFC	Printer internal components (2 of 7) on page 795
XA9-0732-000CN	Screw, RS, M4x8 (booklet-maker only)	Finisher main body (stapler/stacker and booklet-maker) on page 869
XA9-0912-000CN	Screw, with washer, M5x12	Input-tray main body (1x500-sheet) on page 835
XA9-0912-000CN	Screw, with washer, M5x12	Input-tray main body (3x500-sheet) on page 839
XA9-0912-000CN	Screw, with washer, M5x12	Finisher main body (stapler/stacker and booklet-maker) on page 869
XA9-1159-000CN	Screw, TP, M3x6	Printer internal components (4 of 7) on page 799
XA9-1300-000CN	Screw, TP, M4x8	Printer internal components (6 of 7) on page 805
XA9-1386-000CN	Screw, RS, M3x8	Finisher main body (stapler/stacker and booklet-maker) on page 869

www.drukparts.pl

Table 9-59 Numerical parts list (continued)

Part number	Description	Table and page
XA9-1422-000CN	Screw, with washer, M4X12	Printer right-door assembly on page 791
XA9-1422-000CN	Screw, with washer, M4X12	Printer right-door assembly on page 791
XA9-1448-000CN	Screw, RS, M4x8	Input-tray main body (1x500-sheet) on page 835
XA9-1448-000CN	Screw, RS, M4x8	Input-tray main body (1x500-sheet) on page 835
XA9-1448-000CN	Screw, RS, M4x8	Input-tray main body (3x500-sheet) on page 839
XA9-1448-000CN	Screw, RS, M4x8	Input-tray main body (3x500-sheet) on page 839
XA9-1449-000CN	Screw, RS, M3x8	Printer internal components (2 of 7) on page 795
XA9-1449-000CN	Screw, RS, M3x8	Printer internal components (6 of 7) on page 805
XA9-1469-000CN	Screw, TP, M3x6	Input-tray main body (1x500-sheet) on page 835
XA9-1469-000CN	Screw, TP, M3x6	Input-tray main body (3x500-sheet) on page 839
XA9-1495-000CN	Screw, RS, M3X6 (duplex)	Printer right-door assembly on page 791
XA9-1495-000CN	Screw, RS, M3x6	Printer internal components (1 of 7) on page 793
XA9-1495-000CN	Screw, RS, M3x6	Printer internal components (2 of 7) on page 795
XA9-1495-000CN	Screw, RS, M3x6	Printer internal components (3 of 7) on page 797
XA9-1495-000CN	Screw, RS, M3x6	Printer internal components (4 of 7) on page 799
XA9-1495-000CN	Screw, RS, M3x6	Printer internal components (5 of 7) on page 803
XA9-1495-000CN	Screw, RS, M3x6	Printer internal components (6 of 7) on page 805
XA9-1495-000CN	Screw, RS, M3x6	Printer internal components (7 of 7) on page 807
XA9-1504-000CN	Screw, RS, M3x8	Printer internal components (1 of 7) on page 793
XA9-1504-000CN	Screw, RS, M3x8	Printer internal components (2 of 7) on page 795
XA9-1504-000CN	Screw, RS, M3x8	Printer internal components (3 of 7) on page 797
XA9-1504-000CN	Screw, RS, M3x8	Printer internal components (4 of 7) on page 799

www.drukparts.pl

Table 9-59 Numerical parts list (continued)

Part number	Description	Table and page
XA9-1504-000CN	Screw, RS, M3x8	Printer internal components (5 of 7) on page 803
XA9-1504-000CN	Screw, RS, M3x8	Printer internal components (7 of 7) on page 807
XA9-1801-000CN	Screw, RS, M13x12	Printer internal components (7 of 7) on page 807
XB1-2300-407CN	Screw, machined, truss-head, M3x4	Printer internal components (4 of 7) on page 799
XB1-2400-805CN	Screw, machined, truss-head, M4x8	Printer internal components (7 of 7) on page 807
XB2-8300-607CN	Screw, with washer, M3x6	Printer internal components (4 of 7) on page 799
XB2-8300-607CN	Screw, with washer, M3x6	Input-tray main body (1x500-sheet) on page 835
XB2-8300-607CN	Screw, with washer, M3x6	Input-tray main body (3x500-sheet) on page 839
XB4-7401-005CN	Screw, tapping, truss-head, M4X10	Printer external covers and panels on page 787
XB4-7401-005CN	Screw, tapping, truss-head, M4X10	Printer external covers and panels on page 787
XB4-7401-005CN	Screw, tapping, truss-head, M4X10	Printer right-door assembly on page 791
XB4-7401-005CN	Screw, tapping, truss-head, M4x10	Printer internal components (5 of 7) on page 803
XB4-7401-006CN	Screw, tapping, pan-head, M4x10	Input-tray main body (1x500-sheet) on page 835
XB6-7300-607CN	Screw, TP, M3x6 (booklet-maker only)	Finisher main body (stapler/stacker and booklet-maker) on page 869
XB6-7303-005CN	Screw, TP, M3x30	Printer internal components (5 of 7) on page 803
XD2-3100-152CN	Ring, E, external	Saddle assembly (booklet-maker) on page 903
XD3-2200-102CN	Pin, dowel	Finisher main body (stapler/stacker and booklet-maker) on page 869
XD3-2200-102CN	Pin	Finisher main body (stapler/stacker and booklet-maker) on page 869
XD3-2200-142CN	Pin, dowel	Finisher main body (stapler/stacker and booklet-maker) on page 869
XD3-2300-142CN	Pin, dowel	Output bin 1 (stack upper-tray assembly) (booklet-maker) on page 877

www.drukparts.pl

Table 9-59 Numerical parts list (continued)

Part number	Description	Table and page
XD3-2300-142CN	Pin, dowel	Output bin 2 (stack lower-tray assembly) (stapler/stacker and booklet-maker) on page 881
XD3-2300-202CN	Pin, dowel	Saddle assembly (booklet-maker) on page 903
XD9-0136-000CN	Ring, E	Finisher main body (stapler/stacker and booklet-maker) on page 869
XD9-0136-000CN	Ring, E	Finisher main body (stapler/stacker and booklet-maker) on page 869
XD9-0137-000CN	Ring, E	Output bin 1 (stack upper-tray assembly) (booklet-maker) on page 877
XD9-0234-000CN	Ring, E	Printer internal components (4 of 7) on page 799
XD9-0234-000CN	Ring, E	Printer internal components (5 of 7) on page 803
XD9-0240-000CN	Pin, dowel	Printer internal components (4 of 7) on page 799
XF2-1607-860CN	Belt, timing, cogged	Finisher main body (stapler/stacker and booklet-maker) on page 869
XF2-1608-840CN	Belt, timing	Finisher main body (stapler/stacker and booklet-maker) on page 869
XF2-3837-340CN	Belt, timing	Saddle assembly (booklet-maker) on page 903
XF9-0748-000CN	Belt, timing, cogged	Finisher main body (stapler/stacker and booklet-maker) on page 869
XG9-0586-000CN	Bearing, ball	Printer internal components (4 of 7) on page 799

www.drukparts.pl