brother®

FACSIMILE EQUIPMENT

PARTS REFERENCE LIST

MODEL: DCP8020 / 8025D / 8025DN
MFC8420 / 8820D / 8820DN

(For Germany / United Kingdom / France / Belgium / Netherlands / Switzerland / Ireland / Denmark / Austria / Spain / Italy / Portugal / South Africa / Asia / Oceania (Australia & New Zealand) / Pan-Nordic / Euro Generic)

www.drukparts.pl

www.drukparts.pl

© Copyright Brother 2008
All rights reserved
No part of this publication may be reproduced in any form or by any means without permission in writing from the publisher.
Specifications are subject to change without prior notice.

NOTES FOR USING THIS PARTS REFERENCE LIST

1. In the case of ordering parts, it needs mentioning the following items:
   (1) Code
   (2) Q' ty
   (3) Description

   Note: No orders without Parts Code or Tool No. can be accepted.

[Example]

REF.NO.	CODE (1)	Q' TY (2)	DESCRIPTION (3)	REMARKS

2. Design-changed parts:
   When the parts are changed, any one of the following symbols is mentioned in the REMARKS column.
   CHG (chg): The part is changed to a new part.
   ADD (add): The part is newly added.
   DEL (del): The part is deleted.
   Symbol in capital letters indicates that the change is the latest one in the page.

3. Parts change will be informed by the technical information.

COUNTRIES

GERMAN ----- GER
UNITED KINGDOM ----- UK
FRANCE ---- FRA
BELGIUM ---- BEL
NETHERLANDS ---- NLD
SWITZERLAND ---- CHE
IRELAND ---- IRE
DENMARK ---- DEN
AUSTRIA ---- AUS
SPAIN ---- SPA
ITALY ---- ITA
PORTUGAL ---- POR
SOUTH AFRICA ---- ZAF
ASIA ---- ASA
OCEANIA (ARL & NZ) ---- OCE
PAN NORDIC ---- PAN-NOR
EURO GENERIC ---- GNR

www.drukparts.pl

1. FRAME L

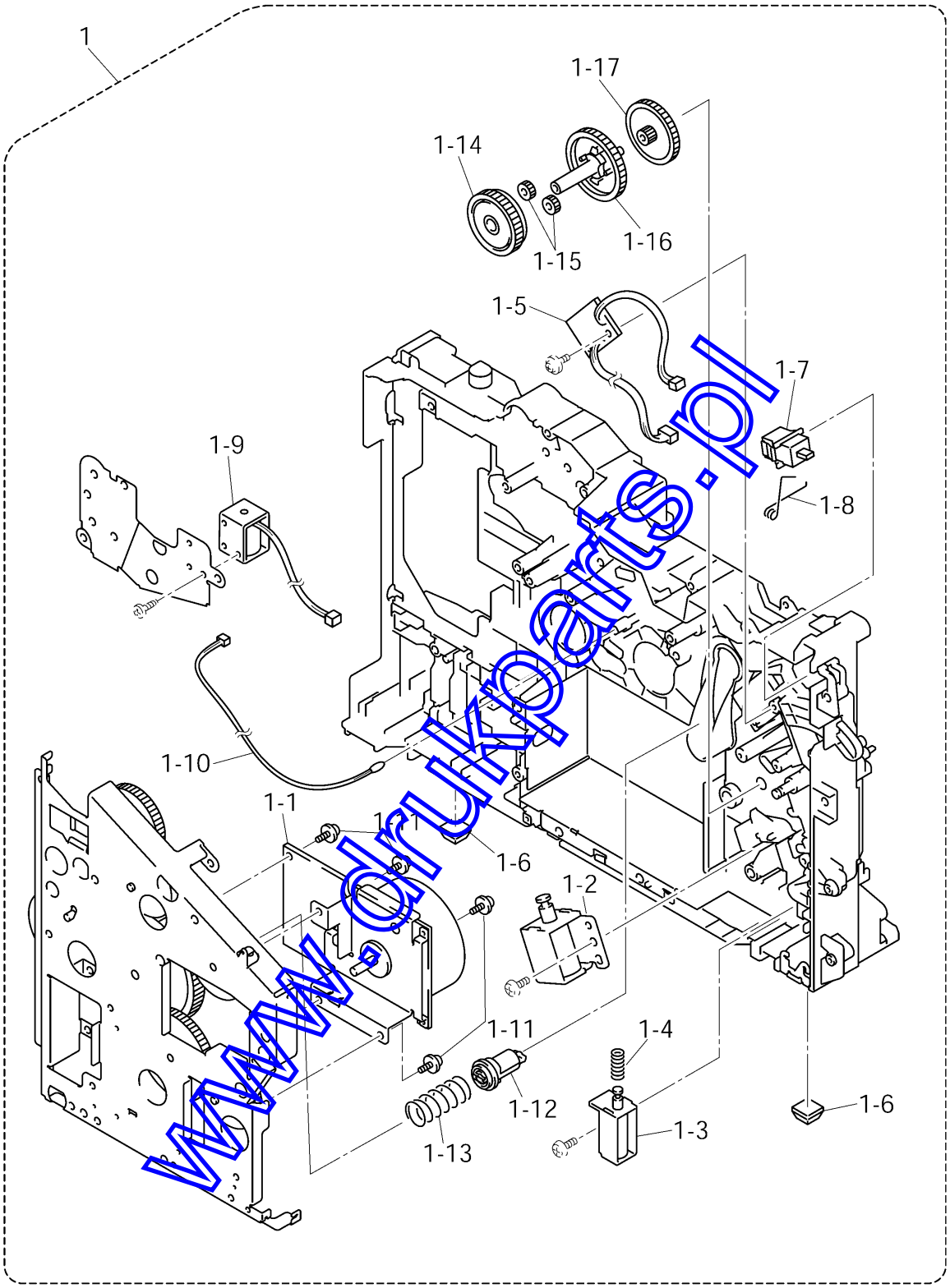

www.drukparts.pl

LIST1(FRAME L)

REF No.	CODE	Q'TY	DESCRIPTION	RECOMMEND	ORDER TO BIUK	REMARK
1	LF2379001	1	MAIN FRAME L UNIT, DCP8020/MFC8420			CHG
1	LF2380001	1	MAIN FRAME L UNIT, DCP8025D/MFC8820D			CHG
1	LE8726001	1	MAIN FRAME L UNIT, DCP8025DN/MFC8820DN			
1-1	LJ7381001	1	MAIN MOTOR ASSY			
1-2	LJ7386001	1	F/R SOLENOID ASSY			
1-3	LJ7391001	1	P/R SOLENOID ASSY			
1-4	LJ5014001	1	SOLENOID RELEASE SPRING P/R			
1-5	LJ9166001	1	TONER LED PCB UNIT ASSY			
1-6	LJ7403001	2	RUBBER FOOT			
1-7	LG3218001	1	DOCUMENT COVER SENSOR			
1-8	LJ7784001	1	SENSOR CLIP			
1-9	LJ7678001	1	REVERSING RELEASE SOLENOID, DCP8025D/DCP8025DN/MFC8820D/MFC8820DN			
1-10	LG4518001	1	THERMISTOR ASSY			
1-11	087320616	4	TAPTITE, CUP S M3X6			
1-12	LJ7377001	1	DEVELOP JOINT			add
1-13	LJ7376001	1	JOINT SPRING			add
1-14	UH3044000	1	GEAR, 40/54Y			add
1-15	UL6569000	2	GEAR 17 PLANETARY			add
1-16	UL8977001	1	GEAR 45 ARM F/R			add
1-17	LJ5056001	1	GEAR 20 CENTER F/R			add

www.drukparts.pl

2. FRAME R

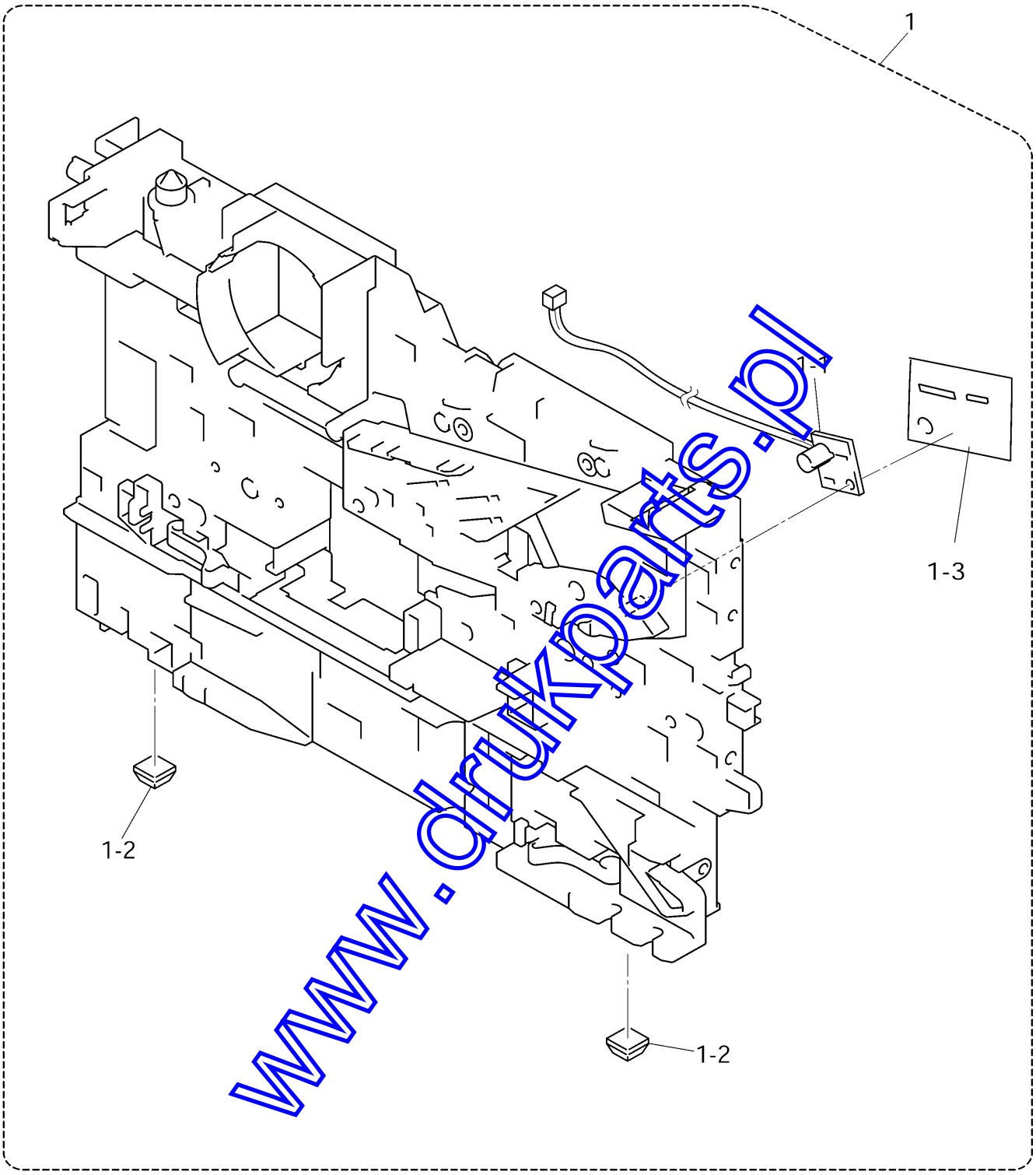

www.drukparts.pl

LIST2(FRAME R)

REF No.	CODE	Q'TY	DESCRIPTION	RECOMMEND	ORDER TO BIUK	REMARK
1	LM2732001	1	MAIN FRAME R UNIT			CHG
1-1	LJ9612001	1	TONER SENSOR PCB UNIT			chg
1-2	LJ7403001	2	RUBBER FOOT			
1-3	LM2731001	1	TE FILM			ADD

www.drukparts.pl

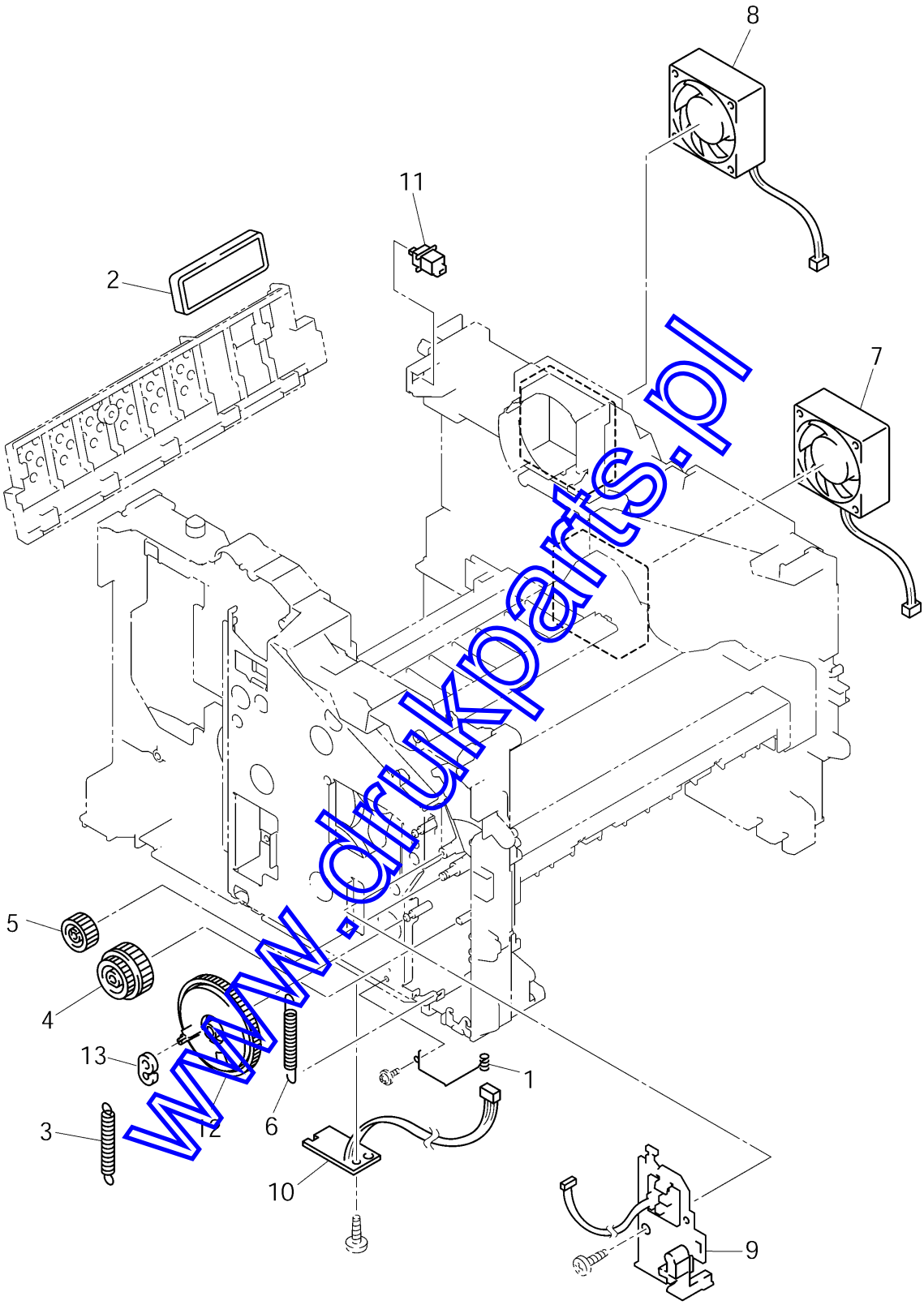

www.drukparts.pl

8C5703/705/713/715/716/733/735/736
8C5743/745/746/783/785/786/793/795/796
8C5822/823/824/825/855/865
8C5903/905/913/915/916/933/935/936
8C5943/945/946/983/985/986/993/995/996

DCP8020/8025D/8025DN, MFC8420/8820D/8820DN
DCP8025J/MFC8820J
M7210/IX2700/IX2701/AGORIS 7216
DCP8040/8045D/8045DN, MFC8440/8840D/8840DN

LIST3(FRAME UNIT)

REF No.	CODE	Q'TY	DESCRIPTION	RECOMMEND	ORDER TO BIUK	REMARK
1	LJ7490001	1	GROUND SPRING			
2	LJ7492001	1	FILTER			
3	LJ7496001	1	SPRING, EXTENSION P/R			
4	LJ7501001	1	MIDDLE ROLLER GEAR			
5	LJ7502001	1	IDLE GEAR 22			
6	LJ7504001	1	GROUND WIRE			
7	LJ7505001	1	FAN MOTOR 60 UNIT LV			
8	LJ7508001	1	FAN MOTOR 60 UNIT			
9	LJ7579001	1	MP SOLENOID HOLDER UNIT, DCP8025D/DCP8025DN/MFC8820D/MFC8820DN			
10	LJ9237001	1	DX-SENSOR PCB ASSY, DCP8025D/DCP8025DN/MFC8820D/MFC8820DN			
11	LG3218001	1	DOCUMENT COVER SENSOR, DCP8025D/DCP8025DN/MFC8820D/MFC8820DN			
12	LJ7535001	1	SECTOR GEAR PR ASSY			ADD
13	UH2378000	1	SPRING HOOK			ADD

www.drukparts.pl

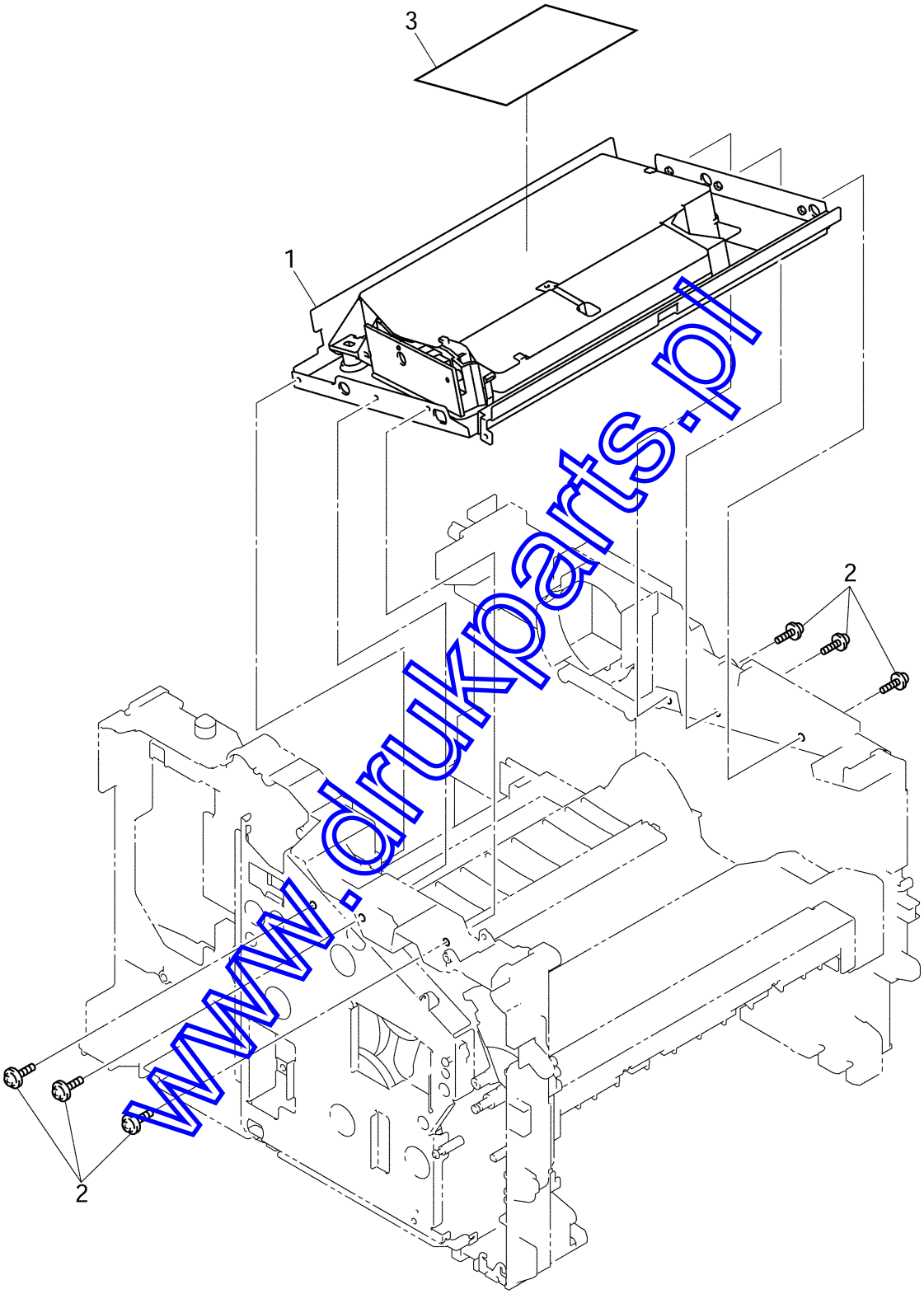

www.drukparts.pl

LIST4(LASER UNIT)

REF No.	CODE	Q'TY	DESCRIPTION	RECOMMEND	ORDER TO BIUK	REMARK
1	LM2833001	1	LASER UNIT (SP)	√		CHG
2	087320815	6	TAPTITE, CUP S M3X8			
3	LJ0908001	1	LASER CAUTION LABEL			chg

www.drukparts.pl

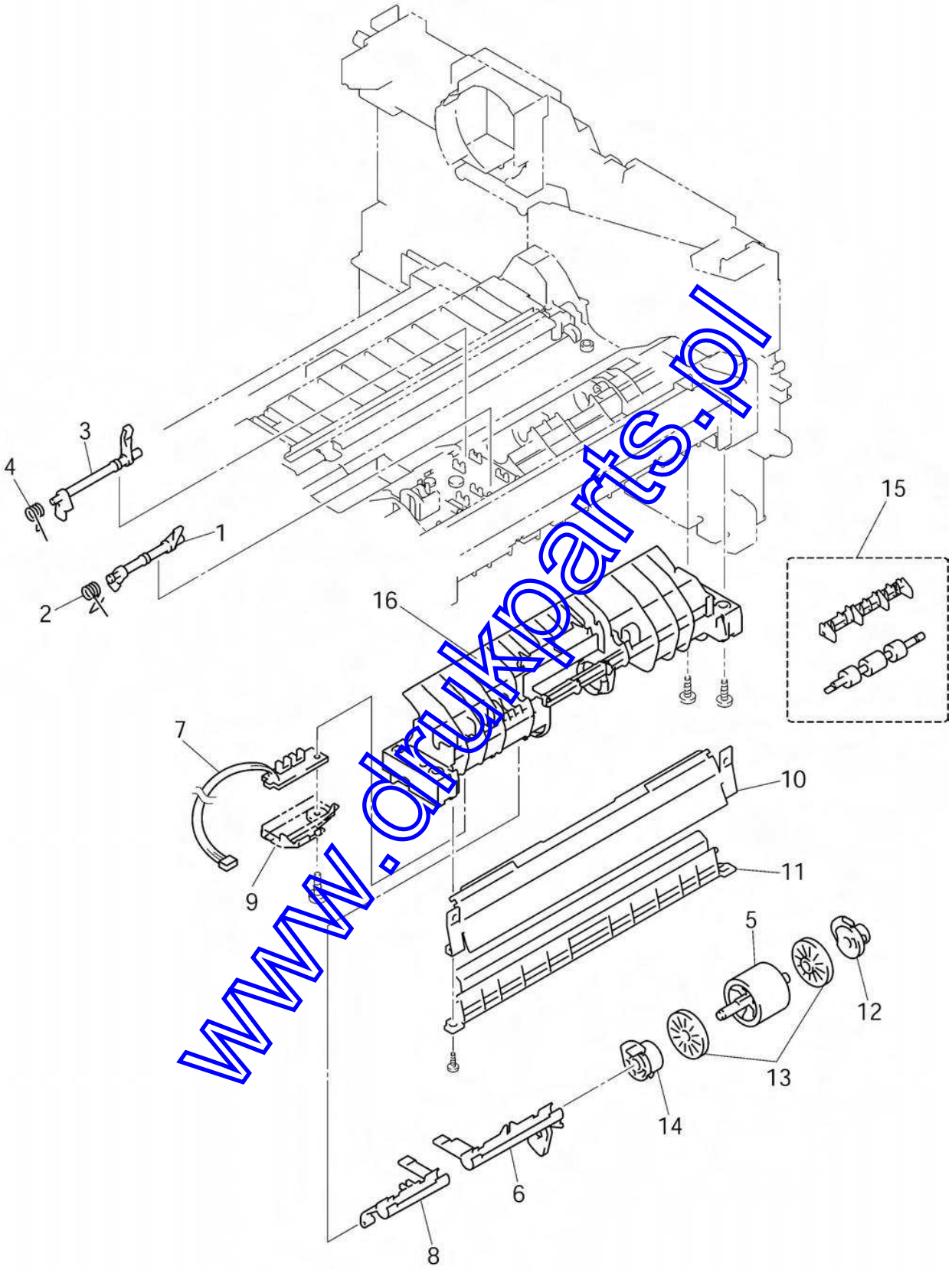

www.drukparts.pl

LIST5(PAPER FEEDER)

REF No.	CODE	Q'TY	DESCRIPTION	RECOMMEND	ORDER TO BIUK	REMARK
1	LJ7322001	1	REGIST FRONT ACTUATOR			
2	LM2590001	1	REGIST FRONT ACTUATOR SPRING			chg
3	LJ7324001	1	REGIST REAR ACTUATOR			
4	LJ7325001	1	REGIST REAR ACTUATOR SPRING			
5	LJ7703001	1	PAPER PICK-UP ROLLER ASSY			
6	LM2601001	1	PE ACTUATOR			chg
7	LJ9235001	1	CASSETTE SENSOR PCB ASSY			
8	LJ5155001	1	CA ACTUATOR			
9	LJ5211001	1	PE SENSOR COVER			add
10	LM2033001	1	FRONT CHUTE GUIDE ASSY			add
11	LM2032001	1	FRONT TRAY CHUTE ASSY			add
12	LJ5021001	1	BUSHING R			add
13	LJ7730001	2	ROLLER COLLAR			add
14	LJ5020001	1	BUSHING L			add
15	LM2953001	1	ROLLER 6 GUIDE ASSY (SP)			CHG
16	LJ7342001	1	FRONT CHUTE FOR DCP8020/MFC8420			add
16	LM2558001	1	FRONT CHUTE FOR DCP8025D/DCP8025DN/MFC8820D/MFC8820DN			add

www.drukparts.pl

6. MP UNIT

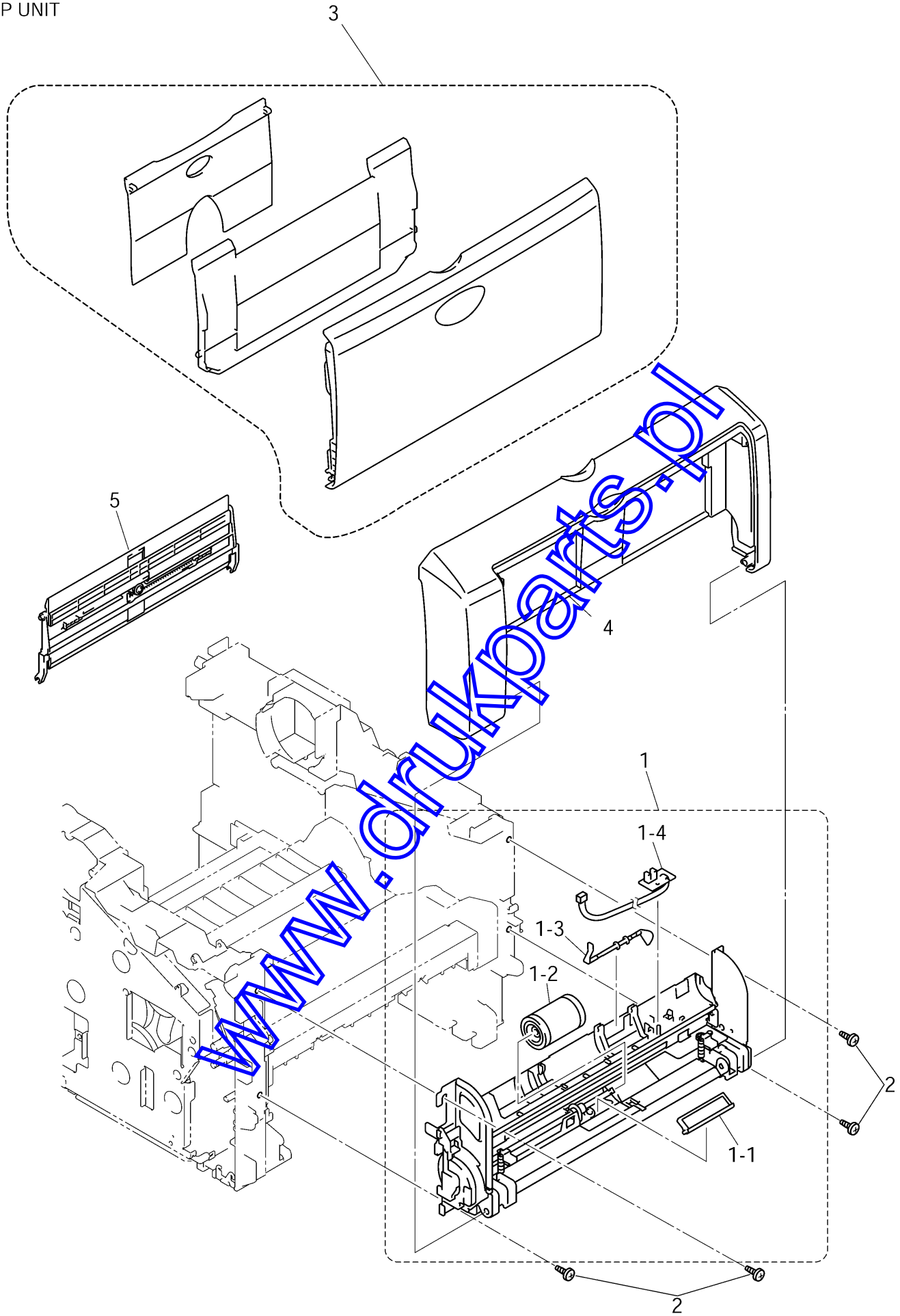

www.drukparts.pl

8C5703/705/713/715/716/733/735/736
8C5743/745/746/783/785/786/793/795/796
8C5822/823/824/825/855/865
8C5903/905/913/915/916/926/933/935/936
8C5943/945/946/983/985/986/993/995/996

DCP8020/8025D/8025DN, MFC8420/8820D/8820DN
DCP8025J/MFC8820J
M7210/IX2700/IX2701/AGORIS 7216/FMF3100PB
DCP8040/8045D/8045DN, MFC8440/8840D/8840DN

LIST6(MP UNIT)

REF No.	CODE	Q'TY	DESCRIPTION	RECOMMEND	ORDER TO BIUK	REMARK
1	LJ7551001	1	MP UNIT ASSY, DCP8025D/DCP8025DN/MFC8820D/MFC8820DN			
1-1	LJ7555001	1	SEPARATION PLATE ASSY, DCP8025D/DCP8025DN/MFC8820D/MFC8820DN			
1-2	LM2050001	1	PAPER PICK-UP ROLLER ASSY (SP), DCP8025D/DCP8025D/MFC8820D			
1-3	LJ7571001	1	MP-PE ACTUATOR, DCP8025D/DCP8025DN/MFC8820D/MFC8820DN			
1-4	LJ9222001	1	MP-PE SENSOR PCB ASSY, DCP8025D/DCP8025DN/MFC8820D/MFC8820DN			
2	085411216	4	TAPTITE, BIND B M4X12, DCP8025D/DCP8025DN/MFC8820D/MFC8820DN			
3	LJ7587001	1	MP TRAY ASSY, DCP8025D/DCP8025DN/MFC8820D /MFC8820DN (NOT INCLUDING A BROTHER EMBLEM.)			add
4	LJ7596001	1	MP FRONT COVER ASSY, DCP8025D/DCP8025DN/MFC8820D/MFC8820DN			add
5	LJ7589001	1	MP PAPER GUIDE ASSY, DCP8025D/DCP8025DN/MFC8820D/MFC8820DN			add

www.drukparts.pl

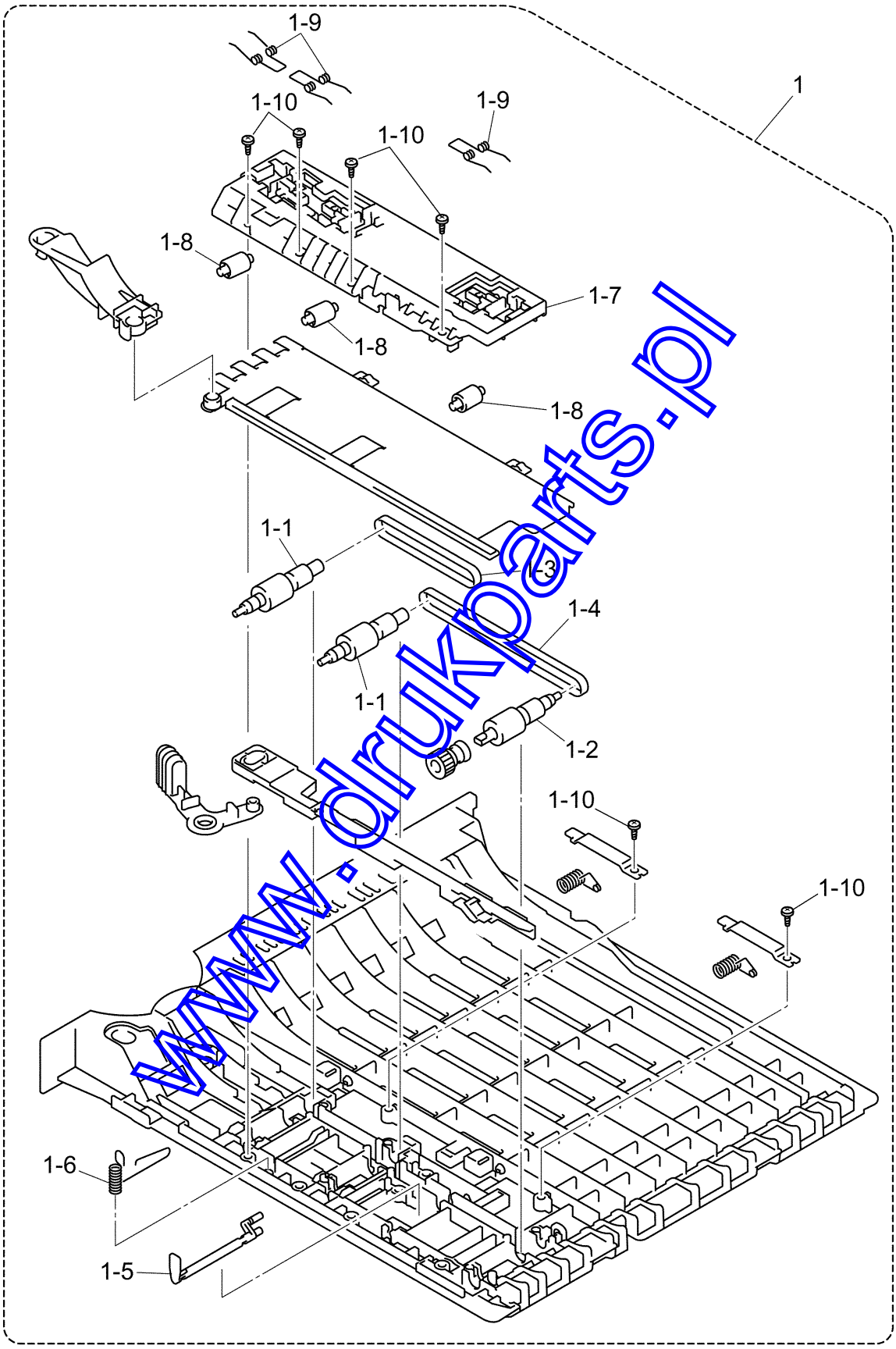

www.drukparts.pl

REF No.	CODE	Q'TY	DESCRIPTION	RECOMMEND	ORDER TO BIUK	REMARK
1	LJ7661001	1	DX FEED ASSY, DCP8025D/DCP8025DN/MFC8820D/MFC8820DN			
1-1	LJ7663001	2	SIDE REGIST ROLLER, DCP8025D/DCP8025DN/MFC8820D/MFC8820DN			
1-2	LJ7664001	1	DX FEED ROLLER, DCP8025D/DCP8025DN/MFC8820D/MFC8820DN			
1-3	LJ5015001	1	T-BELT (S), DCP8025D/DCP8025DN/MFC8820D/MFC8820DN			
1-4	LJ5240001	1	T-BELT (L), DCP8025D/DCP8025DN/MFC8820D/MFC8820DN			
1-5	LJ5248001	1	GUIDE ACTUATOR, DCP8025D/DCP8025DN/MFC8820D/MFC8820DN			
1-6	LJ7669001	1	GROUND WIRE, DCP8025D/DCP8025DN/MFC8820D/MFC8820DN			
1-7	LJ7670001	1	DX ROLLER HOLDER, DCP8025D/DCP8025DN/MFC8820D/MFC8820DN			
1-8	LJ7671001	3	PRESSURE ROLLER, DCP8025D/DCP8025DN/MFC8820D/MFC8820DN			
1-9	LJ7672001	3	PRESSURE ROLLER SPRING, DCP8025D/DCP8025DN/MFC8820D/MFC8820DN			
1-10	085310816	6	TAPTITE, BIND B M3X8, DCP8025D/DCP8025DN/MFC8820D/MFC8820DN			

www.drukparts.pl

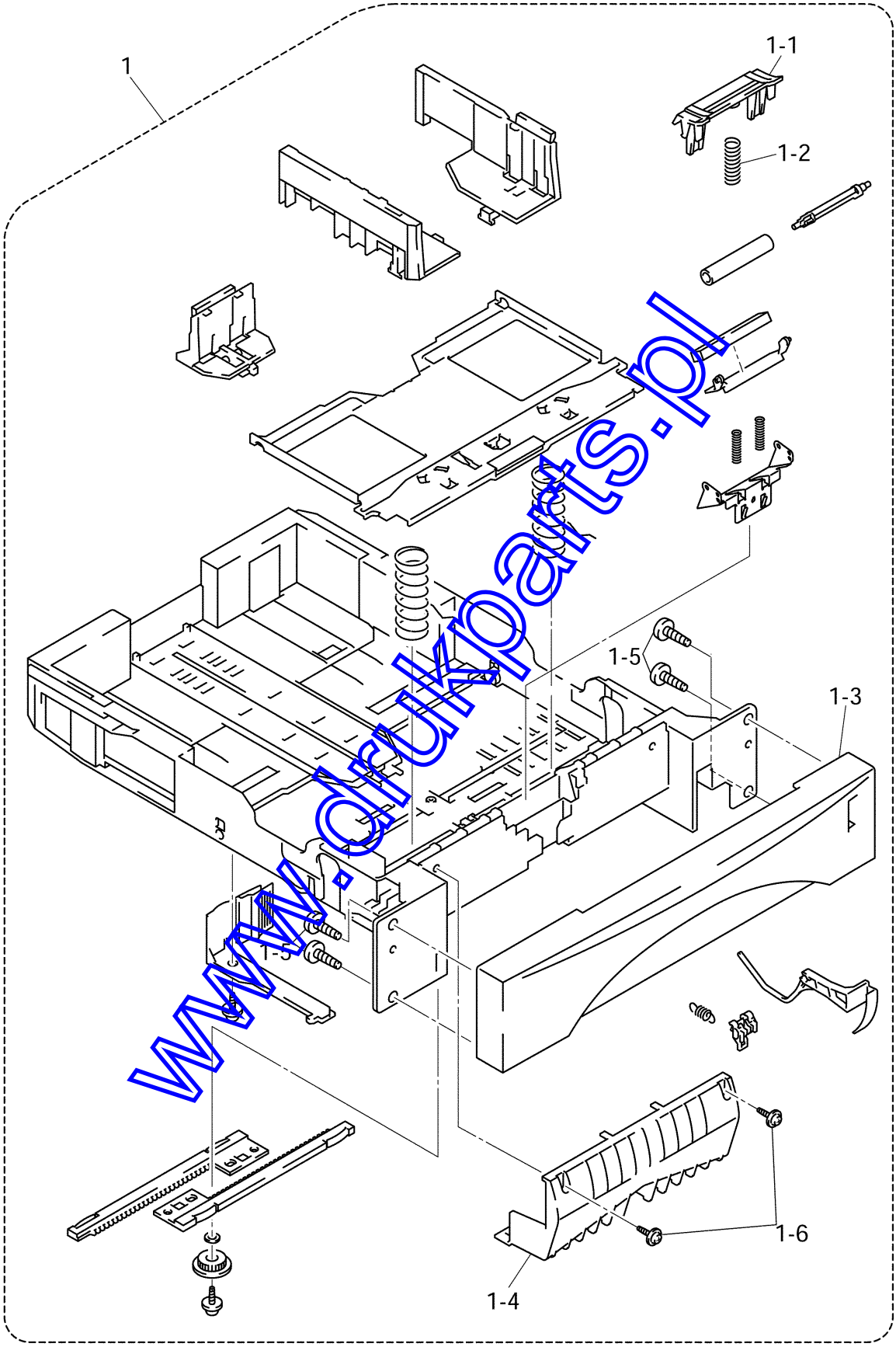

www.drukparts.pl

LIST8(PAPER TRAY)

REF No.	CODE	Q'TY	DESCRIPTION	RECOMMEND	ORDER TO BIUK	REMARK
1	LJ7607001	1	PAPER TRAY ASSY			
1-1	LJ7307001	1	PAD HOLDER			
1-2	LJ5923001	1	SEPARATION PAD SPRING			
1-3	LJ7315001	1	PAPER TRAY FRONT COVER			
1-3	LJ7608001	1	PAPER TRAY FRONT COVER LT			
1-4	LJ7616001	1	PAPER TRAY COVER			
1-5	085411216	4	TAPTITE, BIND B M4X12			
1-6	087311016	2	TAPTITE, CUP B M3X10			

www.drukparts.pl

9. FIXING UNIT

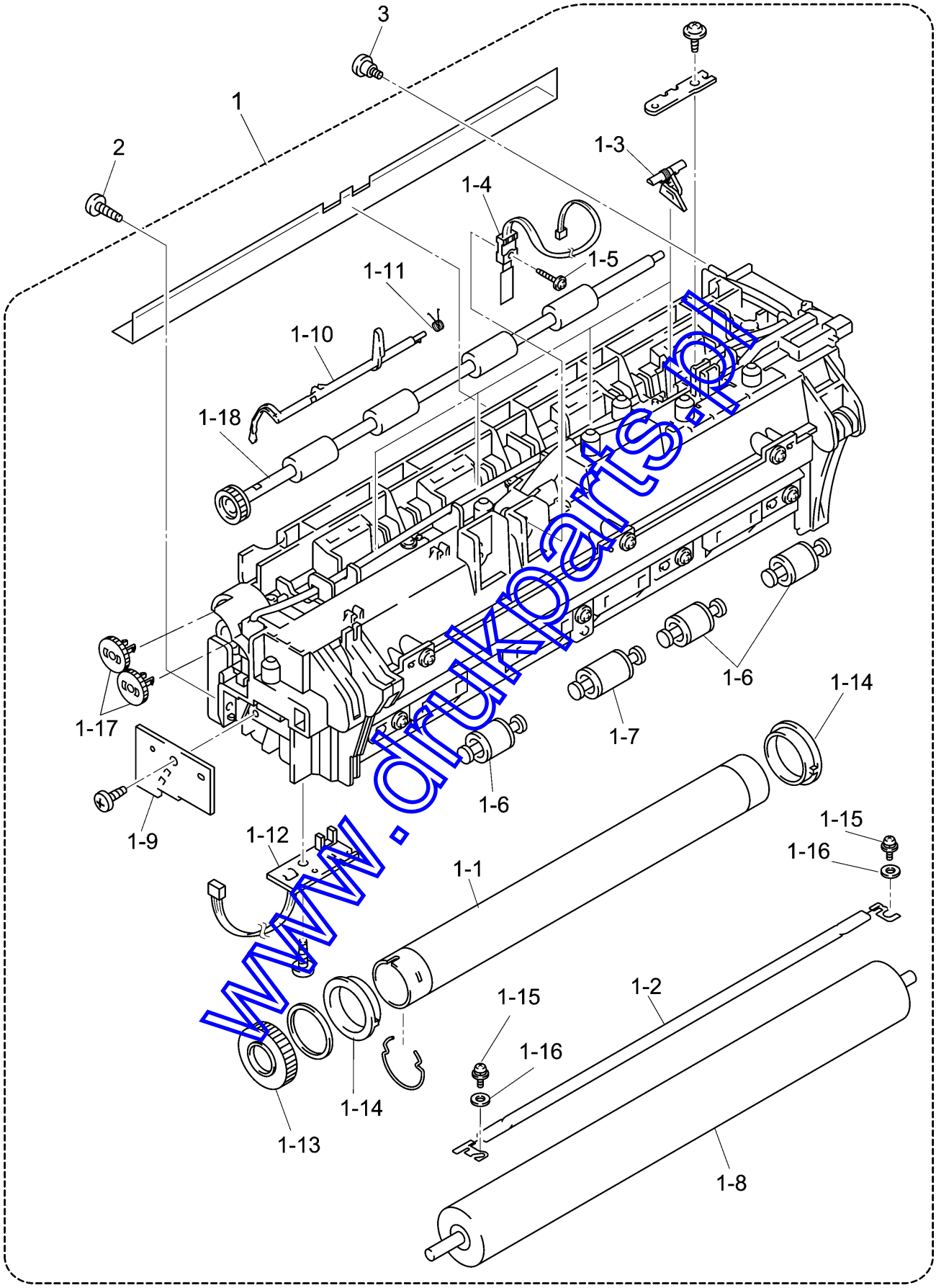

www.drukparts.pl

LIST9(FIXING UNIT)

REF No.	CODE	Q'TY	DESCRIPTION	RECOMMEND	ORDER TO BIUK	REMARK
1	LM2216001	1	FIXING UNIT, 230V (SP)	√		
1-1	LJ7413001	1	HEAT ROLLER 25			
1-2	LJ7539001	1	HALOGEN LAMP, 230V			
1-3	LJ7877001	4	SEPARATE CLAW ASSY			
1-4	LJ7419001	1	THERMISTOR ASSY			
1-5	087311215	1	TAPTITE, CUP B M3X12			
1-6	LJ7428001	3	CLEANER PINCH ROLLER ASSY S			
1-7	LJ7432001	1	CLEANER PINCH ROLLER ASSY L			
1-8	LJ7436001	1	PRESSURE ROLLER 25			
1-9	LJ9174001	1	THERMISTOR RELAY PCB ASSY			
1-10	LJ5289001	1	PAPER EJECT ACTUATOR			
1-11	LJ5066001	1	EJECT ACTUATOR SPRING			
1-12	LJ9176001	1	EJECT SENSOR PCB ASSY			
1-13	LJ7416001	1	HR GEAR 34			add
1-14	LJ7414001	2	HR BEARING 25			add
1-15	LM2254001	2	SCREW, PAN (S/P WASHER) M26X8			add
1-16	LM2255001	2	WASHER, PLAIN 26			add
1-17	LM2047001	2	IDLE GEAR 13			add
1-18	LJ4118001	1	EJECT ROLLER ASSY			ADD
2	085411216	1	TAPTITE, BIND B M4X12			
3	LJ4740001	1	SHOULDER SCREW			

www.drukparts.pl

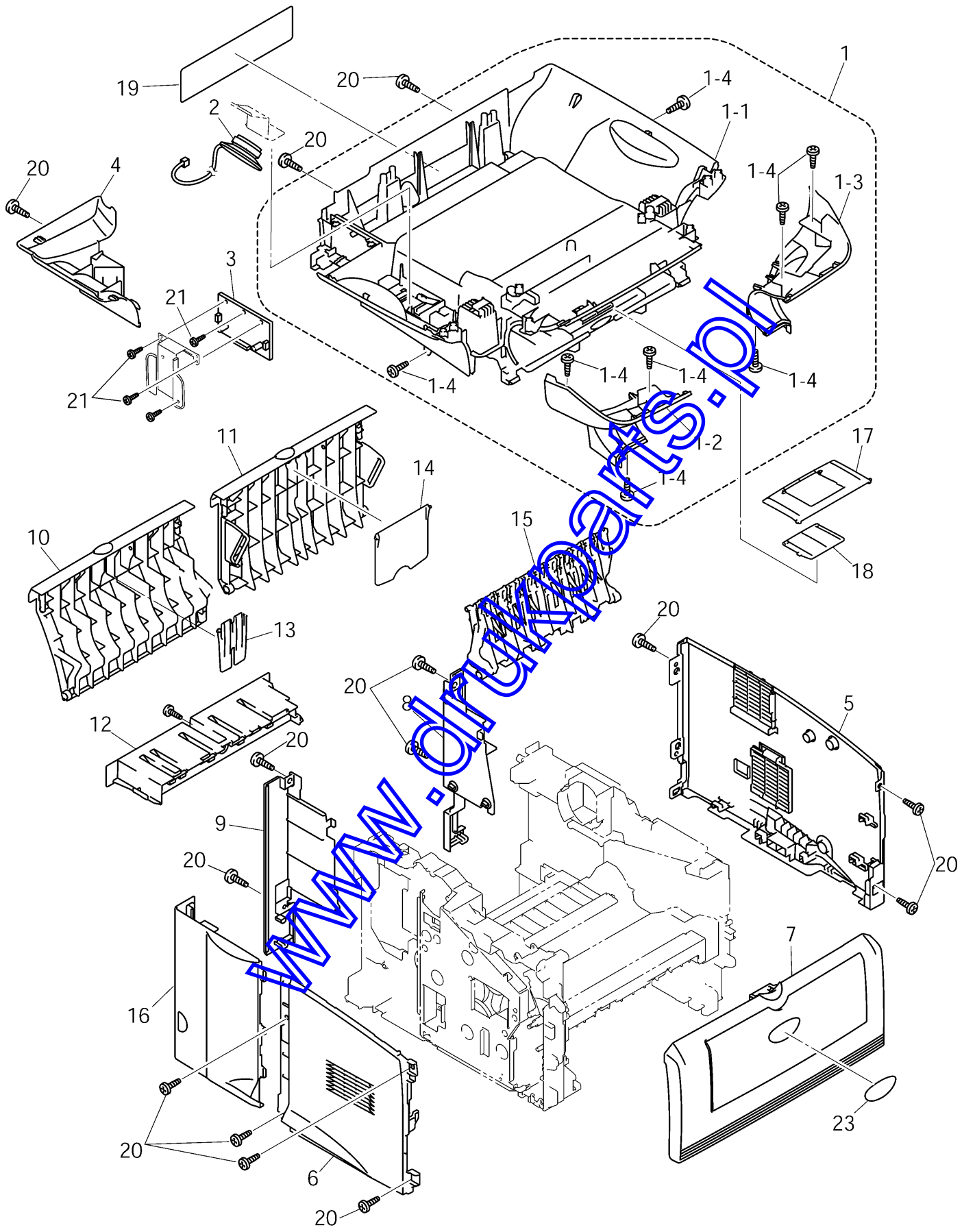

www.drumparts.pl

8C5703/705/713/715/716/733/735/736
8C5743/745/746/783/785/786/793/795/796
8C5822/823/824/825/855/865
8C5903/905/913/915/916/926/933/935/936
8C5943/945/946/983/985/986/993/995/996

DCP8020/8025D/8025DN, MFC8420/8820D/8820DN
DCP8025J/MFC8820J
M7210/IX2700/IX2701/AGORIS 7216/FMF3100PB
DCP8040/8045D/8045DN, MFC8440/8840D/8840DN

REF No.	CODE	Q'TY	DESCRIPTION	RECOMMEND	ORDER TO BIUK	REMARK
1	LF2126001	1	JOINT COVER ASSY			
1-1	LE8599001	1	JOIN COVER			
1-2	LE8600001	1	JOINT COVER FRONT L			
1-3	LE8601001	1	JOINT COVER FRONT R			
1-4	085411216	8	TAPTITE, BIND B M4X12			
2	LG2630001	1	SPEAKER ASSY			
3	LG4377001	1	DRIVER PCB ASSY			
4	LE8603001	1	DRIVER PCB ACCESS COVER			
5	LJ7453001	1	SIDE COVER R			
6	LM2448001	1	SIDE COVER L			chg
7	LM2554001	1	FRONT COVER ASSY, DCP8020/MFC8420 (*) *: FRONT COVER ASSY FOR DCP8025D/ DCP8025DN/ MFC8820D/ MFC8820DN is listed in List 6 as a "MP TRAY ASSY"			chg
8	LJ7465001	1	REAR COVER R, DCP8020/MFC8420			
8	LJ7617001	1	REAR COVER R MP, DCP8025D/DCP8025DN/MFC8820D/MFC8820DN			
9	LJ7466001	1	REAR COVER L, DCP8020			
9	LJ7618001	1	REAR COVER L MP, DCP8025D/DCP8025DN			
9	LE8767001	1	REAR COVER L, MFC8420			
9	LE8604001	1	REAR COVER L MFC MP, MFC8820D/MFC8820DN			
10	LJ7469001	1	OUTER CHUTE, DCP8020/MFC8420			
11	LJ7610001	1	REAR COVER MP, DCP8025D/DCP8025DN/MFC8820D/MFC8820DN			
12	LJ7467001	1	REAR COVER C, DCP8020/MFC8420			
13	LJ7470001	1	OUTER CHUTE TRAY, DCP8020/MFC8420			
14	LJ7613001	1	REAR COVER MP TRAY, DCP8025D/DCP8025DN/MFC8820D/MFC8820DN			
15	LJ7699001	1	OUTER CHUTE MP ASSY, DCP8025D/DCP8025DN/MFC8820D/MFC8820DN			
16	LF2455001	1	ACCESS COVER			chg
17	LJ7895001	1	SUPPORT FLAP			
18	LJ7896001	1	SUPPORT FLAP S			
19	LJ7353001	1	HEATER CAUTION LABEL			
20	085411216	14	TAPTITE, BIND B M4X12			
21	087311016	3	TAPTITE, BIND B M3X10			
(22)	UF5745000	1	MJ COVER, EXT, MFC8420/MFC8820D/MFC8820DN FOR GER/UK/FRA/BEL/DEN/AUS/ITA/ZAF			chg
23	LE8812001	1	BROTHER EMBLEM FOR MFC8820D/MFC8820DN			ADD
23	LE8890001	1	BROTHER EMBLEM FOR MFC8420			ADD
23	LE8891001	1	BROTHER EMBLEM FOR DCP8020/DCP8025D/DCP8025DN			ADD

www.dukparts.pl

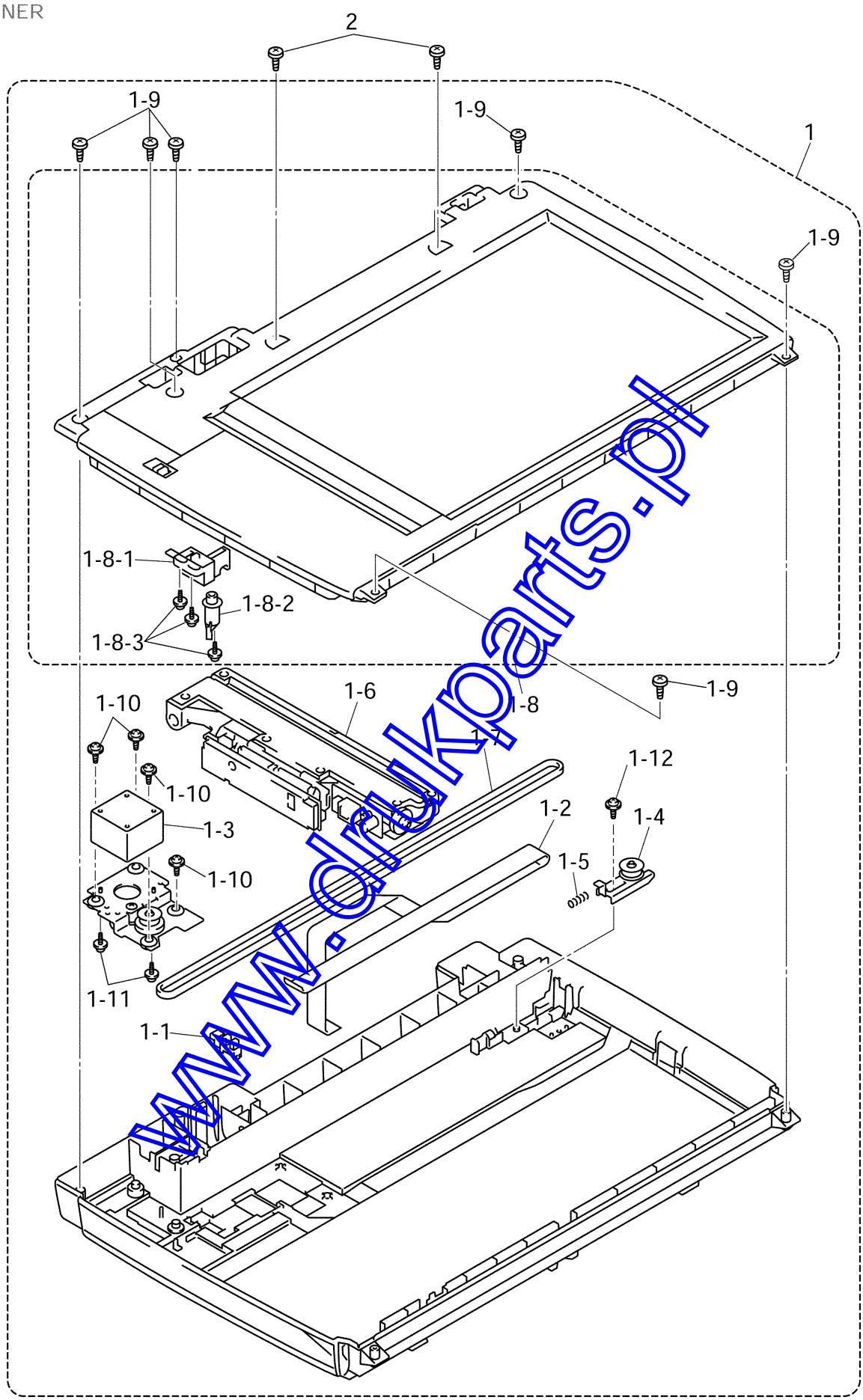

www.drukparts.pl

LIST11(SCANNER)

REF No.	CODE	Q'TY	DESCRIPTION	RECOMMEND	ORDER TO BIUK	REMARK
1	LF2923001	1	SCANNER UNIT (SP)	√		CHG
1-1	LG2239001	1	PHOTO INTERRUPTER			
1-2	LE8618001	1	FFC CABLE ASSY			
1-3	LE8632001	1	SCANNING MOTOR FB			
1-4	LE8634001	1	PULLEY ASSY			
1-5	LE8640001	1	PULLEY SPRING			
1-6	LF2037001	1	CCD MODULE(SP)			
1-7	LE8642001	1	BELT			
1-8	LE8646001	1	TOP COVER ASSY			
1-8-1	LF2004001	1	LOCK LEVER ASSY			
1-8-2	LE8649001	1	LOCK LEVER B			
1-8-3	UF5034001	3	TAPTITE, B 3X6			
1-9	087411216	6	TAPTITE, CUP B M4X12			
1-10	LE2861001	4	TAPTITE, PAN B M3X8			
1-11	0A4300605	2	SCREW, PAN (S/P WASHER) M3X6			
1-12	UF5034001	1	TAPTITE, B 3X6			
2	087412016	2	TAPTITE, CUP B M4X20			

www.drukparts.pl

12. ADF

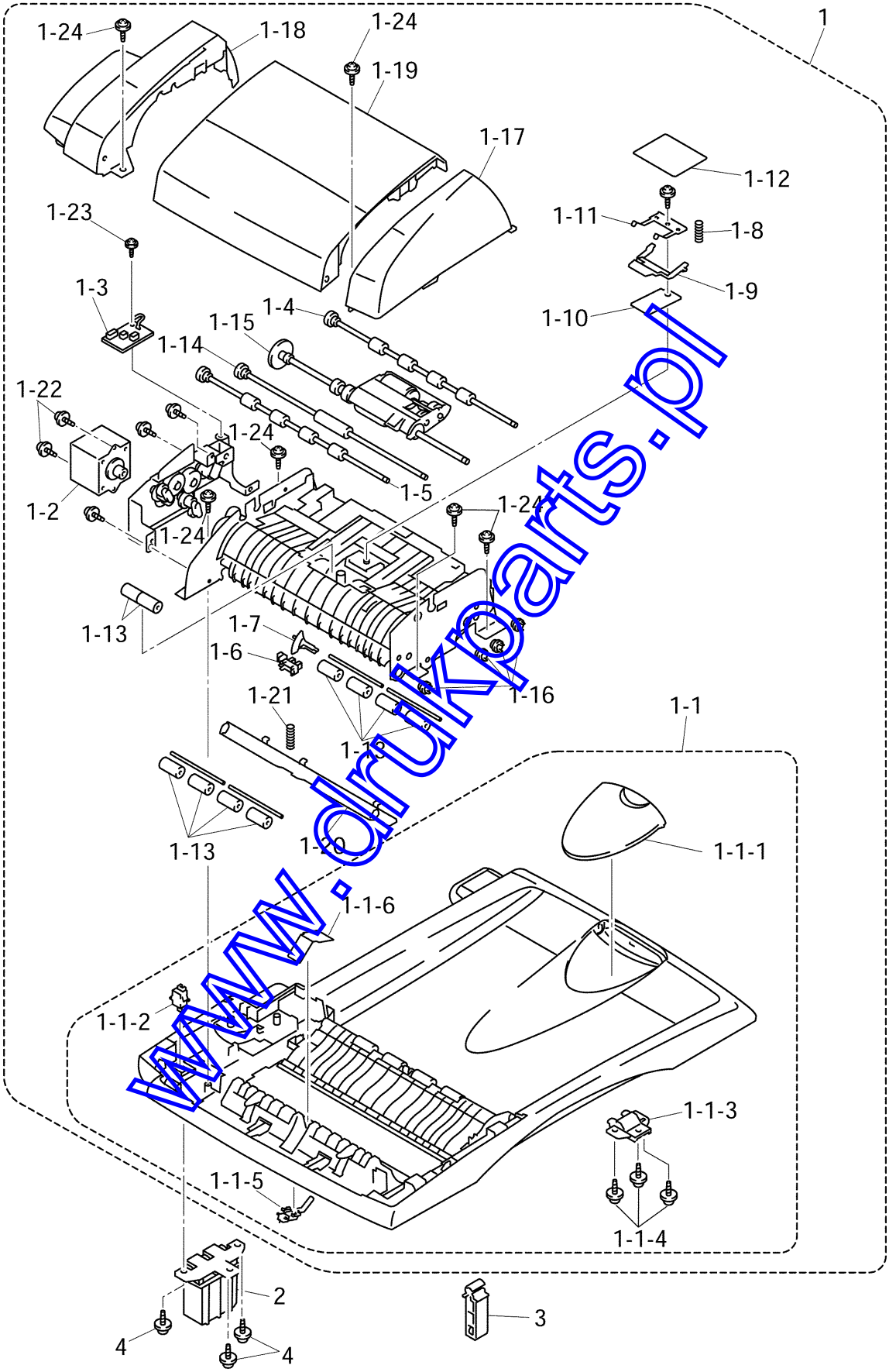

www.drukparts.pl

8C5703/705/713/715/716/733/735/736
8C5743/745/746/783/785/786/793/795/796
8C5822/823/824/825/855/865
8C5903/905/913/915/916/933/935/936
8C5943/945/946/983/985/986/993/995/996

DCP8020/8025D/8025DN, MFC8420/8820D/8820DN
DCP8025J/MFC8820J
M7210/IX2700/IX2701/AGORIS 7216
DCP8040/8045D/8045DN, MFC8440/8840D/8840DN

REF No.	CODE	Q'TY	DESCRIPTION	RECOMMEND	ORDER TO BIUK	REMARK
1	LE8659001	1	DOCUMENT COVER LGL ASSY	√		
1-1	LE8660001	1	DOCUMENT COVER LGL SUB ASSY			
1-1-1	LE8663001	1	DOCUMENT EJECTION TRAY			
1-1-2	LG3218001	1	DOCUMENT COVER SENSOR			
1-1-3	LE6245001	1	HINGE ARM R			
1-1-4	087311016	3	TAPTITE, CUP B M3X10			
1-1-5	LG4567001	1	DOCUMENT REAR SENSOR			ADD
1-1-6	LE8998001	1	REAR SENSOR FILM			ADD
1-2	LE8688001	1	ADF MOTOR			
1-3	LG4376001	1	ADF RELAY PCB ASSY			
1-4	LE8704001	1	LF ROLLER2 ASSY			
1-5	LE8711001	1	EJECTION ROLLER ASSY			
1-6	LG2239001	1	PHOTO INTERRUPTER			
1-7	LE8828001	1	FRONT SENSOR ACTUATOR ASSY			
1-8	LE2011001	1	COMPRESSION SPRING			
1-9	LE2551001	1	RUBBER HOLDER			
1-10	UU2055001	1	SEPARATION RUBBER			
1-11	LE1513001	1	SPRING PLATE ADF FRONT A ASSY			
1-12	LE2470001	1	ADF FILM			
1-13	UF9009001	10	PRESSER ROLLER			
1-14	LE8722001	1	LF ROLLER1 ASSY			
1-15	LE2919001	1	PF ROLLER HOLDER ASSY			
1-16	UU1290001	4	CONDUCTIVE BUSHING			
1-17	LE8727001	1	SIDE COVER F			
1-18	LE8728001	1	SIDE COVER R			
1-19	LE8729001	1	ADF COVER			
1-20	LE8834001	1	DOCUMENT HOLD ASSY			
1-21	LF2026001	1	DOCUMENT HOLD SPRING			
1-22	0A4300605	2	SCREW, PAN (S/P WASHER) M3X6			
1-23	087320616	1	TAPTITE, CUP S M3X6			
1-24	087311016	6	TAPTITE, CUP B M3X10			
2	LE8731001	1	HINGE ASSY L			
3	LE6244001	1	HINGE BASE R			
4	087311016	3	TAPTITE, CUP B M3X10			

www.drukparts.pl

13. PANEL

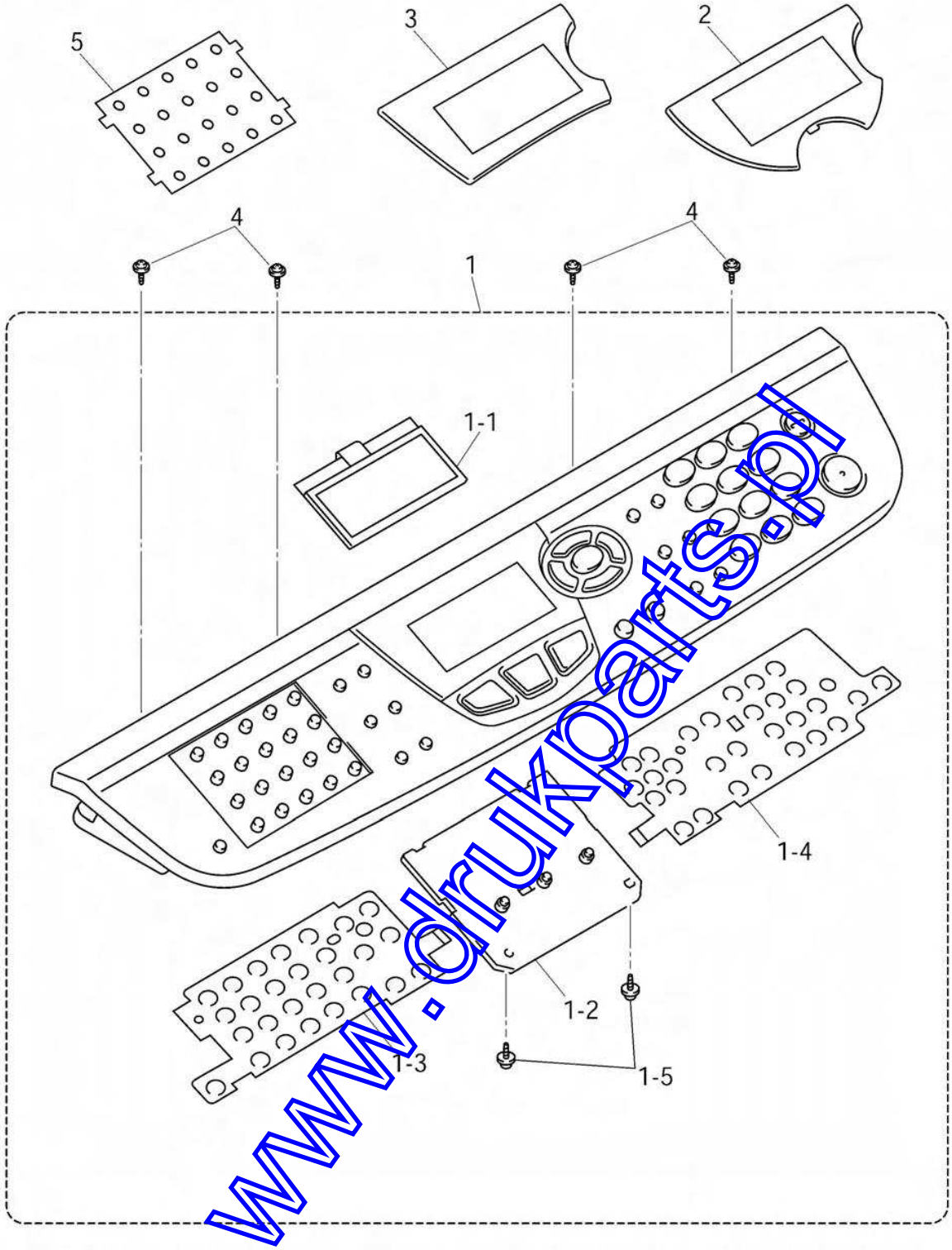

www.drukparts.pl

REF No.	CODE	Q'TY	DESCRIPTION	RECOMMEND	ORDER TO BIUK	REMARK
1	LE8796001	1	PANEL UNIT, DCP8020 FOR GER	√		
1	LE8848001	1	PANEL UNIT, DCP8025D/DCP8025DN FOR GER	√		
1	LE8798001	1	PANEL UNIT, MFC8420 FOR GER/AUS	√		
1	LE8850001	1	PANEL UNIT, MFC8820D/MFC8820DN FOR GER/AUS	√		
1	LE8768001	1	PANEL UNIT, DCP8020 FOR UK/ZAF/ASA/GNR	√		
1	LE8844001	1	PANEL UNIT, DCP8025D/DCP8025DN FOR UK/ZAF/ASA	√		
1	LE8942001	1	PANEL UNIT, MFC8420 FOR UK/IRE/ZAF/GNR	√		
1	LE8999001	1	PANEL UNIT, MFC8820D FOR UK/IRE/ZAF/GNR, MFC8820DN FOR UK	√		chg
1	LE8846001	1	PANEL UNIT, MFC8820D FOR ASA/OCE	√		add
1	LF2076001	1	PANEL UNIT, DCP8020 FOR FRA	√		
1	LF2066001	1	PANEL UNIT, DCP8025D/DCP8025DN FOR FRA	√		
1	LE8947001	1	PANEL UNIT, MFC8420 FOR FRA	√		
1	LF2005001	1	PANEL UNIT, MFC8820D/MFC8820DN FOR FRA	√		
1	LF2084001	1	PANEL UNIT, DCP8020 FOR BEL/NLD/CHE/DEN/PAN-NOR	√	√	chg
1	LF2088001	1	PANEL UNIT, DCP8025D FOR BEL/NLD/CHE/DEN/PAN-NOR, DCP8025DN FOR DEN	√	√	chg
1	LE8952001	1	PANEL UNIT, MFC8420 FOR BEL/NLD/CHE	√	√	
1	LF2003001	1	PANEL UNIT, MFC8820D FOR BEL/NLD/CHE, MFC8820DN FOR BEL	√	√	chg
1	~~LF2104001~~	~~1~~	~~PANEL UNIT, DCP8020 FOR DEN~~	~~√~~	~~√~~	del
1	LE8973001	1	PANEL UNIT, MFC8420 FOR DEN/PAN-NOR	√	√	
1	LF2010001	1	PANEL UNIT, MFC8820D FOR DEN/PAN-NOR, MFC8820DN FOR DEN	√	√	chg
1	LF2108001	1	PANEL UNIT, DCP8020 FOR SPA	√	√	
1	LF2146001	1	PANEL UNIT, DCP8025D/DCP8025DN FOR SPA	√	√	
1	LE8984001	1	PANEL UNIT, MFC8420 FOR SPA	√	√	
1	LF2013001	1	PANEL UNIT, MFC8820D/MFC8820DN FOR SPA	√	√	chg
1	LF2112001	1	PANEL UNIT, DCP8020 FOR ITA	√	√	
1	LF2148001	1	PANEL UNIT, DCP8025D FOR ITA	√	√	
1	LE8968001	1	PANEL UNIT, MFC8420 FOR ITA	√	√	
1	LF2017001	1	PANEL UNIT, MFC8820D FOR ITA	√	√	
1	LF2116001	1	PANEL UNIT, DCP8020 FOR POR	√	√	
1	LF2150001	1	PANEL UNIT, DCP8025D FOR POR	√	√	
1	LE8985001	1	PANEL UNIT, MFC8420 FOR POR	√	√	
1	LF2019001	1	PANEL UNIT, MFC8820D FOR POR	√	√	
1-1	LG4383001	1	LCD			
1-2	LG4411001	1	PANEL PCB ASSY, DCP8020/DCP8025D/DCP8025DN			
1-2	LG4384001	1	PANEL PCB ASSY, MFC8420/MFC8820D			
1-3	LG4393001	1	FPC KEY ONETOUCH			CHG
1-4	LG4392001	1	FPC KEY COPY			CHG
1-5	087310815	2	TAPTITE, CUP B M3X8			
2	LE8771001	1	LCD SHEET, DCP8020/DCP8025D	√		
3	LE8700001	1	LCD SHEET, MFC8420	√		
3	LE8750001	1	LCD SHEET, MFC8820D/MFC8820DN	√		
4	087411215	4	TAPTITE, CUP B M4X12			
5	LE8752001	1	ADDRESS LABEL FOR MFC8420/MFC8820D/MFC8820DN			add

www.drukparts.pl

14. PCB

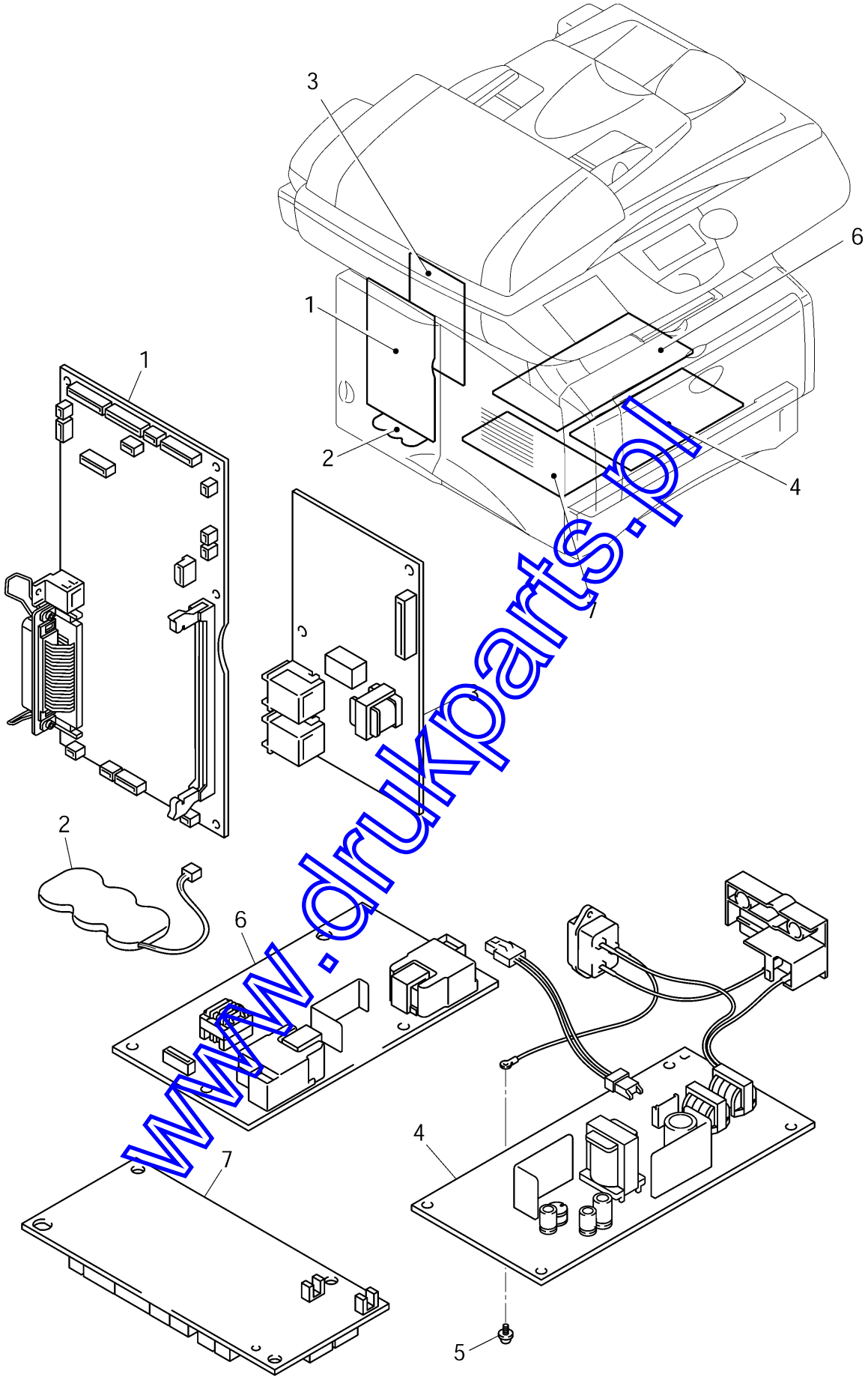

www.drukparts.pl

REF No.	CODE	Q'TY	DESCRIPTION	RECOMMEND	ORDER TO BIUK	SYMBOL	REMARK
1	LG4405001	1	MAIN PCB ASSY FOR DCP8020/DCP8025D/DCP8025DN	√		B53K627	
1	LG4394001	1	MAIN PCB ASSY FOR MFC8420/MFC8820D/MFC8820DN	√		B53K627	
2	LG3429001	1	BATTERY FOR MFC8420/MFC8820D/MFC8820DN				
3	LG5602001	1	NCU PCB ASSY, MFC8420/MFC8820D/MFC8820DN EXCEPT FOR ASA/OCE	√		B53K666	chg
3	~~LG4520025~~	~~1~~	~~NCU PCB ASSY, MFC8420/MFC8820D FOR SAF~~	~~√~~		~~B53K666~~	del
3	LG4520040	1	NCU PCB ASSY, MFC8820D FOR ASA	√		B53K666	
3	LG4520006	1	NCU PCB ASSY, MFC8820D FOR OCE	√		B53K666	
4	LG5288001	1	LOW-VOLTAGE PS PCB UNIT, EXCEPT FOR ASA				chg
4	LG5564001	1	LOW-VOLTAGE PS PCB UNIT FOR ASA				CHG
5	LM2048001	1	SCREW, PAN (S/P WASHER) M3.5X6				
6	LJ9200001	1	HIGH-VOLTAGE PS PCB ASSY				
7	LG4404001	1	ENGINE PCB ASSY FOR DCP8020/MFC8420				
7	LJ9274001	1	ENGINE PCB ASSY FOR DCP8025D/DCP8025DN/MFC8820D/MFC8820DN				

www.drukparts.pl

15. ACCESSORIES

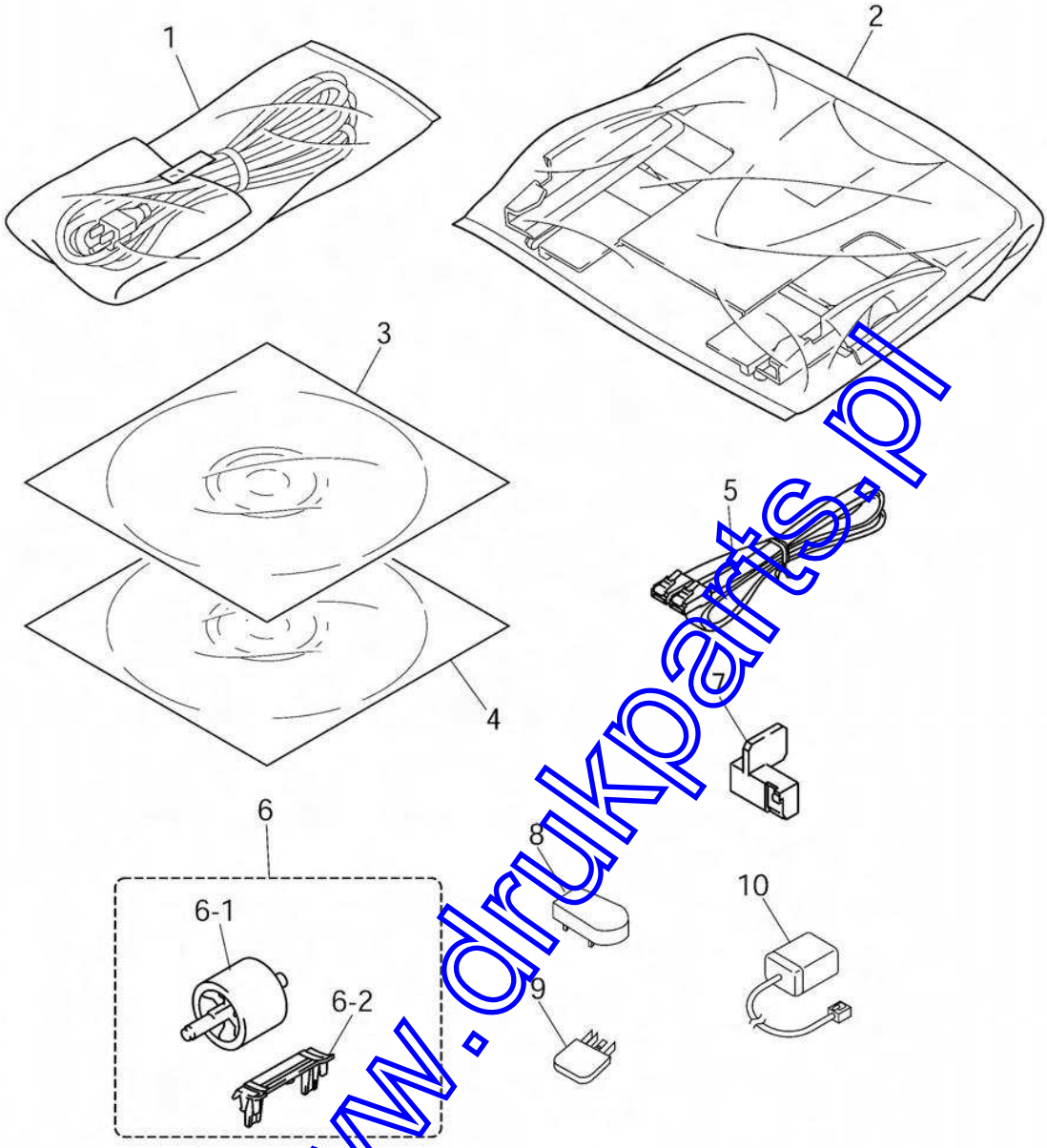

www.drukparts.pl

LIST15(ACCESSORIES)

REF No.	CODE	Q'TY	DESCRIPTION	RECOMMEND	ORDER TO BIUK	REMARK
1	LG4424001	1	AC CORD BAG ASSY,VDE FOR GER/FRA/BEL/NLD/AUS/SPA/ITA/POR/ASA/GNR/PAN-NOR			
1	LG4717001	1	AC CORD BAG ASSY, BS FOR UK/IRE/ASA			
1	LG4718001	1	AC CORD BAG ASSY, SEV FOR CHE/SWI		√	
1	LG4720001	1	AC CORD BAG ASSY, DEMKO FOR DEN		√	
1	LG4719001	1	AC CORD BAG ASSY, S AFRICA FOR ZAF			
1	LJ9667001	1	AC CORD BAG ASSY, SAA FOR ASA/OCE			chg
2	LE8833001	1	DOCUMENT TRAY BAG ASSY			
3	LE8895001	1	CD-ROM ASSY, DCP8020/DCP8025D FOR GER/UK/FRA/CHE/ZAF/ASA, DCP8025DN FOR GER/UK/FRA <Windows>			chg
3	LE8907001	1	CD-ROM ASSY, MFC8420 FOR GER/UK/FRA/CHE/IRE/AUS/ZAF, MFC8820D FOR GER/UK/FRA/CHE/IRE/AUS/ZAF/ASA/OCE, MFC8820DN FOR GER/UK/FRA/AUS <Windows>			chg
3	LE8979001	1	CD-ROM ASSY, DCP8020 FOR BEL/NLD/PAN-NOR/GNR, DCP8025D FOR BEL/NLD/PAN-NOR <Windows>		√	chg
3	LE8953001	1	CD-ROM ASSY, MFC8420/MFC8820D FOR BEL/NLD/PAN-NOR/GNR, MFC8820DN FOR BEL <Windows>			chg
3	LE8980001	1	CD-ROM ASSY, DCP8020/DCP8025D FOR DEN/PAN-NOR, DCP8025DN FOR DEN <Windows>		√	chg
3	LE8974001	1	CD-ROM ASSY, MFC8420/MFC8820D FOR DEN/PAN-NOR, MFC8820DN FOR DEN <Windows>		√	
3	LF2547001	1	CD-ROM ASSY, DCP8020/DCP8025D FOR SPA/ITA/POR, DCP8025DN FOR SPA <Windows>		√	chg
3	LF2546001	1	CD-ROM ASSY, MFC8420/MFC8820D FOR SPA/ITA/POR, MFC8820DN FOR SPA <Windows>		√	chg
4	LF2548001	1	CD-ROM ASSY <Macintosh>			chg
~~4~~	~~LF2134001~~	~~1~~	~~CD-ROM ASSY <Macintosh> GNR~~			del
5	UG3625001	1	TELEPHONE LINE CORD, MFC8420/MFC8820D/MFC8820DN FOR GER			
5	UG3626001	1	TELEPHONE LINE CORD, MFC8420MFC8820D/MFC8820DN FOR UK .			
5	UG3627001	1	TELEPHONE LINE CORD, MFC8420/ MFC8820D/ MFC8820DN FOR FRA .			
5	UG1575001	1	TELEPHONE LINE CORD, MFC8420/MFC8820D/MFC8820DN FOR BEL		√	
5	LG3077001	1	TELEPHONE LINE CORD, MFC8420/MFC8820D FOR NLD/IRE/ZAF/SPA/POR/ASA/GNR/OCE(AUSTRALIA), MFC8820DN FOR SPA			
5	UG3469000	1	TELEPHONE LINE CORD, MFC8420/MFC8820D FOR CHE		√	
5	LG5827001	1	TELEPHONE LINE CORD, MFC8420/MFC8820D/MFC8820DN FOR DEN/PAN-NOR		√	CHG
5	UG4205001	1	TELEPHONE LINE CORD, MFC8420/MFC8820D/MFC8820DN FOR AUS			
5	UG3634001	1	TELEPHONE LINE CORD, MFC8420/MFC8820D FOR ITA		√	
5	UG3290001	1	TELEPHONE LINE CORD, MFC8820D FOR OCE(NEW ZEALAND)		√	
5	~~UG3629001~~	~~1~~	~~TELEPHONE LINE CORD, MFC8420/MFC8820D FOR PAN-NOR(NORWAY)~~		√	DEL
5	~~UG3632001~~	~~1~~	~~TELEPHONE LINE CORD, MFC8420/MFC8820D FOR PAN-NOR(FINLAND)~~		√	DEL
5	~~UG3635001~~	~~1~~	~~TELEPHONE LINE CORD, MFC8420/MFC8820D FOR PAN-NOR(SWEDEN)~~		√	DEL
6	LJ7920001	1	PAPER FEEDING KIT			
6-1	LJ7703001	1	PAPER PICK-UP ROLLER ASSY			
6-2	LJ7307001	1	PAD HOLDER			
7	LM2102001	1	FU LAMP ASSEMBLY JIG ASSY			
8	LG5828001	1	TELEPHONE PLUG, MFC8420/MFC8820D/MFC8820DN FOR DEN/PAN-NOR (DENMARK)			ADD
8	LG5829001	1	TELEPHONE PLUG, MFC8420/MFC8820D/MFC8820DN FOR PAN-NOR (FINLAND)			ADD
8	LG5830001	1	TELEPHONE PLUG, MFC8420/MFC8820D/MFC8820DN FOR PAN-NOR (SWEDEN)			ADD
9	-----		NOT USED			
10	-----		NOT USED			

www.drukparts.pl

REF No.	CODE	Q'TY	DESCRIPTION	RECOMMEND	ORDER TO BIUK	REMARK
(1)	LE8897001	1	USER'S GUIDE, DCP8020/DCP8025D/DCP8025DN FOR GER	√		
(1)	LE8909001	1	USER'S GUIDE, MFC8420/MFC8820D/MFC8820DN FOR GER/AUS	√		
(1)	~~LE8867001~~	~~1~~	~~USER'S GUIDE, DCP8020 FOR UK/ZAF/ASA/PAN-NOR/GNR~~	~~√~~		DEL
(1)	LF2073004	1	USER'S GUIDE, DCP8020 FOR UK/ZAF/ASA/PAN-NOR/GNR, DCP8025D FOR UK/ZAF/ASA/PAN-NOR, DCP8025DN FOR UK	√		
(1)	LE8944004	1	USER'S GUIDE, MFC8420/MFC8820D FOR UK/IRE/ZAF/PAN-NOR/GNR, MFC8820DN FOR UK	√		
(1)	LF2073005	1	USER'S GUIDE, DCP8020/DCP8025D/DCP8025DN FOR FRA .	√		
(1)	LE8944005	1	USER'S GUIDE, MFC8420/MFC8820D/MFC8820DN FOR FRA .	√		
(1)	LF2073008	1	USER'S GUIDE, DCP8020/DCP8025D FOR BEL/NLD <DUTCH>	√	√	
(1)	LF2094008	1	USER'S GUIDE, DCP8020/DCP8025D FOR BEL/CHE <FRENCH>	√	√	CHG
(1)	LE8944008	1	USER'S GUIDE, MFC8420/MFC8820D FOR BEL/NLD, MFC8820DN FOR BEL <DUTCH>	√		
(1)	LE8955008	1	USER'S GUIDE, MFC8420/MFC8820D FOR BEL/CHE MFC8820DN FOR BEL <FRENCH>	√		
(1)	LF2073010	1	USER'S GUIDE, DCP8020/DCP8025D FOR CHE <GERMAN>	√	√	
(1)	LE8944010	1	USER'S GUIDE, MFC8420/MFC8820D FOR CHE <GERMAN>	√	√	
(1)	LF2073013	1	USER'S GUIDE, DCP8020/DCP8025D/DCP8025DN FOR DEN	√	√	
(1)	LE8944013	1	USER'S GUIDE, MFC8420/MFC8820D/MFC8820DN FOR DEN	√	√	
(1)	LF2073015	1	USER'S GUIDE, DCP8020/DCP8025D/DCP8025DN FOR SPA	√	√	
(1)	LE8944015	1	USER'S GUIDE, MFC8420/MFC8820D/MFC8820DN FOR SPA	√	√	
(1)	LF2073016	1	USER'S GUIDE, DCP8020/DCP8025D FOR ITA	√	√	
(1)	LE8944016	1	USER'S GUIDE, MFC8420/MFC8820D FOR ITA	√	√	
(1)	LF2073018	1	USER'S GUIDE, DCP8020/DCP8025D FOR POR	√	√	
(1)	LE8944018	1	USER'S GUIDE, MFC8420/MFC8820D FOR POR	√	√	
(1)	LE8944040	1	USER'S GUIDE, MFC8820D FOR USA/OCE	√		

www.drukparts.pl

LIST17(PACKING MATERIALS)

REF No.	CODE	Q'TY	DESCRIPTION	RECOMMEND	ORDER TO BIUK	REMARK
(1)	LE8898001	1	CARTON, BROTHER, DCP8020 EXCEPT FOR ASA	√		
(1)	LF2090001	1	CARTON, BROTHER, DCP8020 FOR ASA	√		
(1)	LE8903001	1	CARTON, BROTHER, DCP8025D EXCEPT FOR ASA	√		
(1)	LF2140001	1	CARTON, BROTHER, DCP8025D FOR ASA	√		
(1)	LF2137001	1	CARTON, BROTHER FOR DCP8025DN	√		CHG
(1)	LE8912001	1	CARTON, BROTHER FOR MFC8420	√		
(1)	LE8916001	1	CARTON, BROTHER, MFC8820D EXCEPT FOR ASA/OCE	√		
(1)	LF2027001	1	CARTON, BROTHER, MFC8820D FOR ASA/OCE	√		
(1)	LF2046001	1	CARTON, BROTHER FOR MFC8820DN	√		
(2)	UE1688001	1	PE BAG 1000X1000H			
(3)	LE8762001	1	POLYSTYRENE FORM PAD ASSY FOR DCP8020/MFC8420			
(3)	LE8757001	1	POLYSTYRENE FORM PAD ASSY FOR DCP8025D/DCP8025DN/MFC8820D/MFC8820DN			

www.drukparts.pl

brother

www.drukparts.pl

PL-FAX050
8C5733
Ver. S-1