brother®

FACSIMILE EQUIPMENT

PARTS REFERENCE LIST

MODEL: DCP130C / DCP330C
DCP540CN / DCP750CW
FAX2480C / FAX2580C
MFC230C / MFC240C
MFC240CE / MFC440CN
MFC660CN / MFC665CW
MFC665CWE / MFC845CW

www.drukparts.pl

© Copyright Brother 2006
All rights reserved
No part of this publication may be reproduced in any form
or by any means without permission in writing from the
publisher.

NOTES FOR USING THIS PARTS REFERENCE LIST

1. In the case of ordering parts, it needs mentioning the following items:
   (1) Code
   (2) Q' ty
   (3) Description
   (4) Recommend (The √ mark is attached to recommend parts at this column.)
   (5) Symbol (PCB No., Revision, and Parts location mounted on the PCB.)

   Note: Orders without Parts Code or Tool No. can not be accepted.

[Example]

	(1)	(2)	(3)	(4)	(5)	
REF.NO.	CODE	Q' TY	DESCRIPTION	RECOMMEND	SYMBOL	REMARKS

2. Design-changed parts:
   When the parts are changed, any one of the following symbols is mentioned in the REMARKS column.
   CHG (chg): The part is changed to a new part.
   ADD (add): The part is newly added.
   DEL (del): The part is deleted.
   Symbol in capital letters indicates that the change is the latest one in the page.

3. Parts change will be informed by the technical information.

COUNTRIES

U.S.A. ----- US
CANADA ---- CAN
BRAZIL ---- BRA
GERMANY ----- GER
UNITED KINGDOM ----- UK
FRANCE ---- FRA
BELGIUM ---- BEL
NETHERLANDS ----NLD
SWITZERLAND ---- CHE
AUSTRIA ---- AUS
SPAIN ---- SPA
ITALY ---- ITA
ISRAEL ---- ISR
PORTUGAL ---- POR
CHINA ---- CHN
SOUTH AFRICA ---- ZAF
ARGENTINA ----ARG
CHILE ---- CHL
ASIA (SINGAPORE & GULF)---- ASA
GENERIC ---- GNR

RUSSIA ---- RUS
OCEANIA (AUSTRALIA & NEW ZEALAND) ---- OCE
PAN NORDIC
(NORWAY / FINLAND / DENMARK / SWEDEN) ---- PND
IBERIA (SPA & POR) ---- IBR
EEU GENERIC ---- EEU

www.drukparts.pl

CONTENTS

1. ADF 1
2. SCANNER 3
3. ENGINE 5
4. CARTRIDGE CASE 7
5. HEAD 9
6. PAPER TRAY 11
7. COVER 13
8. PANEL1 16
   PANEL2 17
   PANEL3 18
9. PCB 25
10. ACCESSORIES 27
11. PRINTED MATERIALS 31
12. PACKAGING 35
13. OTHERS 41

www.drukparts.pl

1 ADF

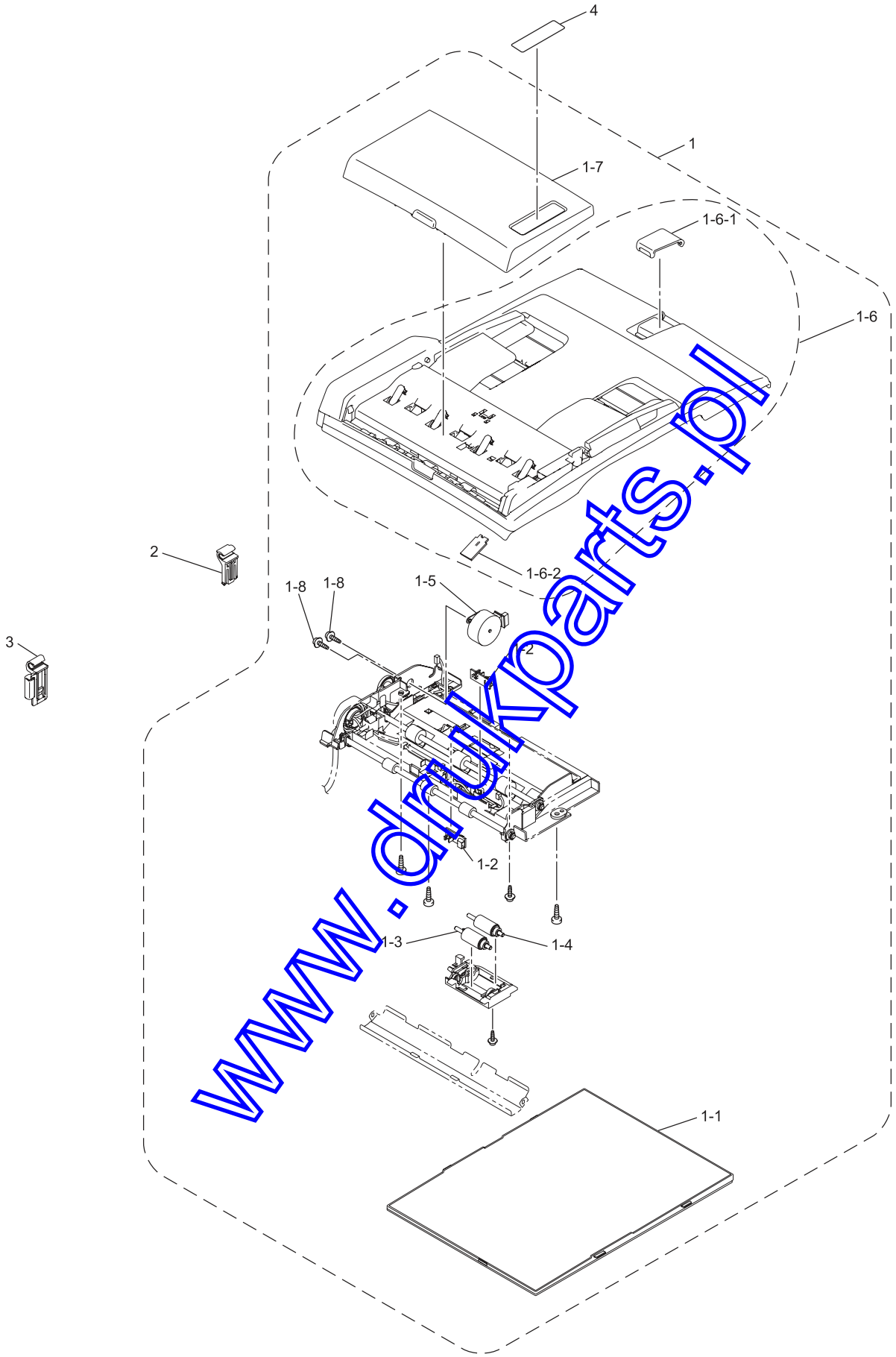

www.drukparts.pl

REF No	CODE	Q'TY	DESCRIPTION	RECOMMEND	SYMBOL	REMARKS
1	LP3619004	1	ADF UNIT ASSY (SP), DCP540CN/MFC440CN	√		
1	LP3619010	1	ADF UNIT ASSY (SP), FAX2480C/FAX2580C	√		
1	LP3619003	1	ADF UNIT ASSY (SP), MFC240C/MFC240CE	√		
1	LP3619007	1	ADF UNIT ASSY (SP), MFC660CN/MFC665CW/MFC665CWE	√		
1	LP3619008	1	ADF UNIT ASSY (SP), MFC845CW			
1-1	LP3625001	1	DOCUMENT SPONGE ADF ASSY (SP)			
1-2	LG6753001	2	ADF FRONT/REAR SENSOR ASSY		B53K857	
1-3	LP1413001	1	DOCUMENT SEPARATION ROLLER			
1-4	LP1404001	1	DOCUMENT PULL-IN ROLLER			
1-5	LF5214001	1	ADF MOTOR			
1-6	LP1420004	1	DOCUMENT COVER ASSY, METALLIC SILVER(1740), DCP540CN/MFC440CN			
1-6	LP1420010	1	DOCUMENT COVER ASSY, GRAY(1737), FAX2480C/FAX2580C			
1-6	LP1420003	1	DOCUMENT COVER ASSY, GRAY(1581), MFC240C/MFC240CE			
1-6	LP1420007	1	DOCUMENT COVER ASSY, METALLIC SILVER(1740), MFC660CN/MFC665CW/MFC665CWE			
1-6	LP1420008	1	DOCUMENT COVER ASSY, METALLIC SILVER(1805), MFC845CW			
1-6-1	LP1422003	1	DOCUMENT STOPPER, GRAY(1581), DCP540CN/MFC240C/MFC240CE/MFC440CN/ MFC660CN/MFC665CW/MFC665CWE			
1-6-1	LP1422007	1	DOCUMENT STOPPER, GRAY(1791), MFC845CW			
1-6-1	LP1422010	1	DOCUMENT STOPPER, GRAY(1737), FAX2480C/FAX2580C			
1-6-2	LP1428001	1	SEPARATION RUBBER			
1-7	LP1430005	1	ADF COVER ASSY, GRAY(1735), DCP540CN/MFC440CN			
1-7	LP1430011	1	ADF COVER ASSY, GRAY(1736), FAX2480C/FAX2580C			
1-7	LP1430001	1	ADF COVER ASSY, BLUE(6506), MFC240C/MFC240CE			
1-7	LP1430008	1	ADF COVER ASSY, METALLIC SILVER(1805), MFC660CN/MFC665CW/MFC665CWE			
1-7	LP1430004	1	ADF COVER ASSY, METALLIC SILVER(1740), MFC845CW			
1-8	0A5300606	2	SCREW PAN (S/P WASHER) M3X6			
2	LP1444003	1	HINGE ARM R, GRAY(1581), DCP540CN/MFC240C/MFC240CE/MFC440CN/ MFC660CN/MFC665CW/MFC665CWE			
2	LP1444007	1	HINGE ARM R, GRAY(1791), MFC845CW			
2	LP1444010	1	HINGE ARM R, GRAY(1737), FAX2480C/FAX2580C			
3	LP1437003	1	HINGE ARM L, GRAY(1581), DCP540CN/MFC240C/MFC240CE/MFC440CN/ MFC660CN/MFC665CW/MFC665CWE			
3	LP1437007	1	HINGE ARM L, GRAY(1791), MFC845CW			
3	LP1437010	1	HINGE ARM L, GRAY(1737), FAX2480C/FAX2580C			
4	LP1203002	1	EMBLEM BROTHER, DCP540CN/MFC440CN/MFC660CN/ MFC665CW/MFC665CWE/MFC845CW EXCEPT FOR CHN FAX2480C FOR ASA/OCE			
4	LP3070002	1	EMBLEM BROTHER, FAX2480C FOR US/CAN			
4	LP3070004	1	EMBLEM BROTHER, FAX2580C FOR US			
4	LP1203001	1	EMBLEM BROTHER, MFC240C/MFC240CE EXCEPT FOR CHN			
4	LP1893002	1	EMBLEM BROTHER, DCP540CN/MFC440CN/MFC665CW/FAX2480C FOR CHN			
4	LP1893001	1	EMBLEM BROTHER, MFC240C FOR CHN			

www.dlukparts.pl

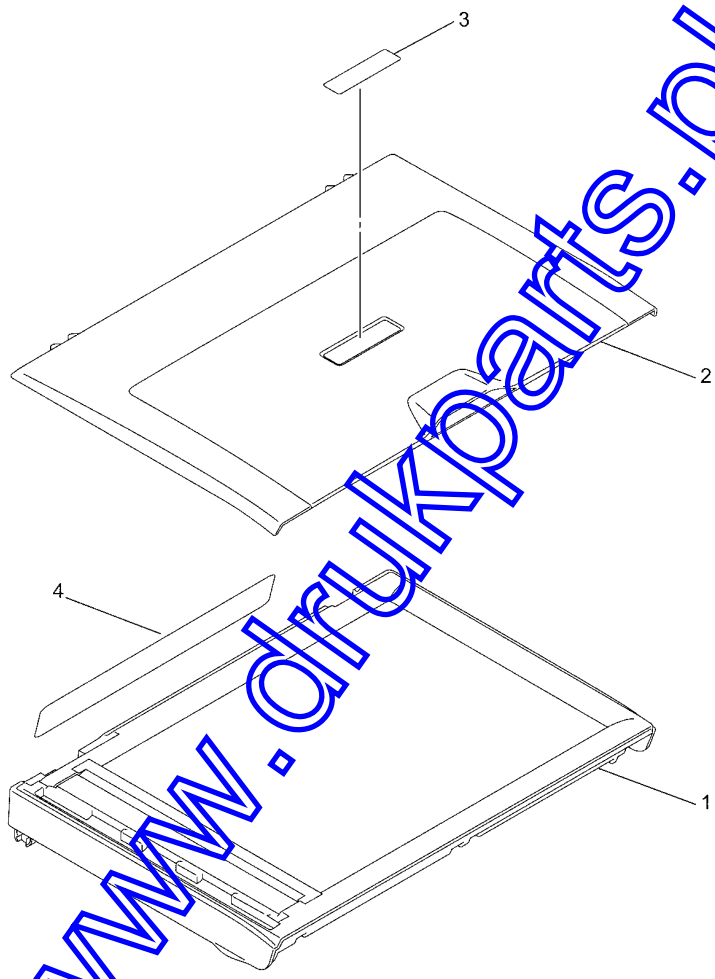

www.drukparts.pl

REF No.	CODE	Q'TY	DESCRIPTION	RECOMMEND	REMARKS
1	LP3517001	1	SCANNER UNIT ASSY (SP), DCP130C		
1	LP3517005	1	SCANNER UNIT ASSY (SP), DCP330C/DCP750CW		
1	LP3861005	1	SCANNER UNIT ASSY (SP), DCP540CN/MFC660CN/MFC665CW/MFC665CWE		
1	LP6163005	1	SCANNER UNIT ASSY (SP), MFC230C		
1	LP3626001	1	SCANNER UNIT ASSY (SP), MFC240C/MFC240CE		
1	LP3626005	1	SCANNER UNIT ASSY (SP), FAX2480C/FAX2580C/MFC440CN/MFC845CW		
2	LP3522003	1	DOCUMENT COVER ASSY (SP), GRAY(1581), DCP130C		
2	LP3522004	1	DOCUMENT COVER ASSY (SP), METALLIC SILVER(1740), DCP330C		
2	LP3522008	1	DOCUMENT COVER ASSY (SP), METALLIC SILVER(1805), DCP750CW		
2	LP3522005	1	DOCUMENT COVER ASSY (SP), MFC230C		
3	LP1203001	1	EMBLEM BROTHER, DCP130C EXCEPT FOR CHN		
3	LP1203002	1	EMBLEM BROTHER, DCP330C/DCP750CW EXCEPT FOR CHN		
3	LP1203004	1	EMBLEM BROTHER, MFC230C		
3	LP1893001	1	EMBLEM BROTHER, DCP130C FOR CHN		
3	LP1893002	1	EMBLEM BROTHER, DCP330C FOR CHN		
4	LP1305001	1	PAPER JAM INSTRUCTION LABEL		

www.drukparts.pl

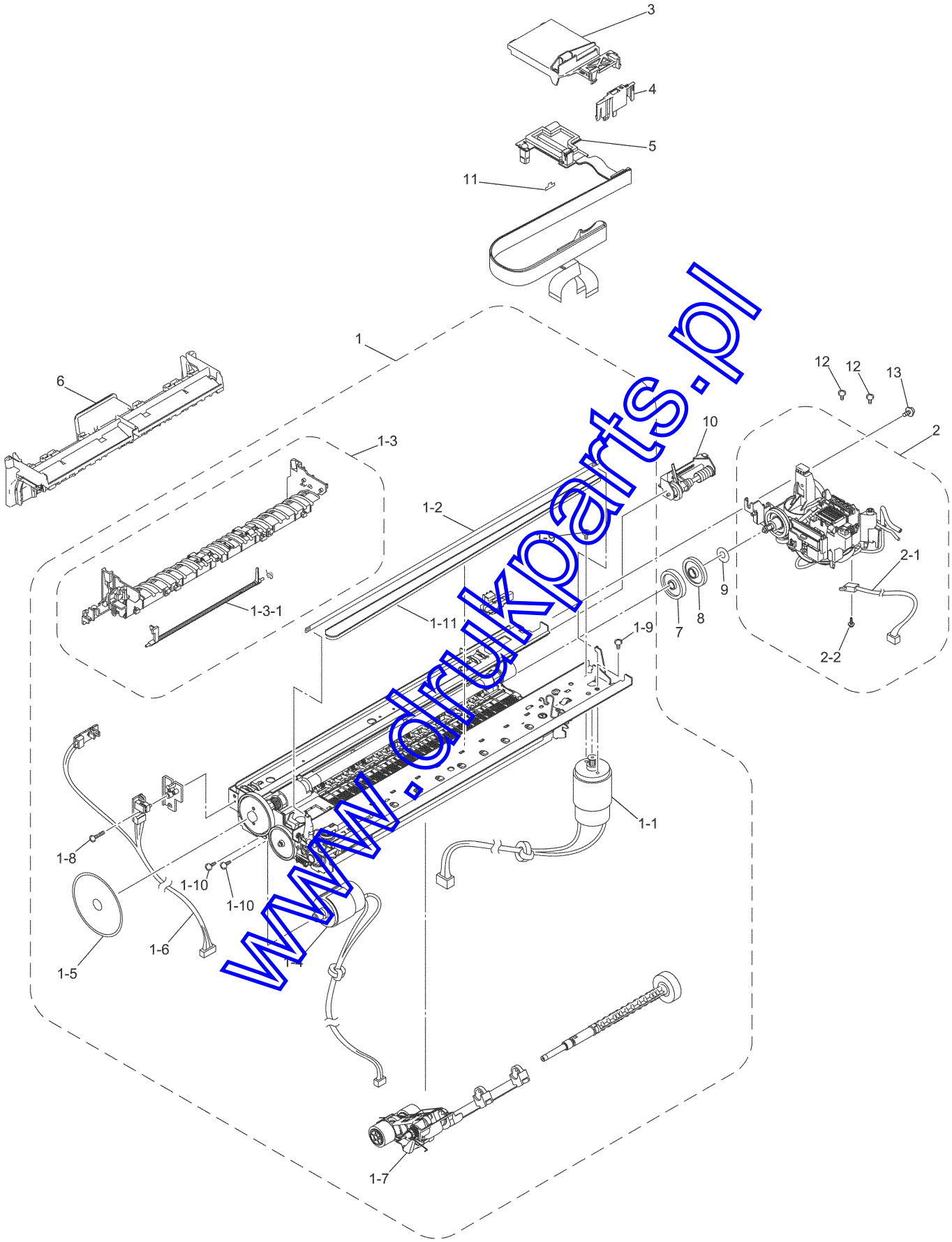

www.drukparts.pl

REF No.	CODE	Q'TY	DESCRIPTION	RECOMMEND	REMARKS
1	LP3524001	1	ENGINE UNIT ASSY (SP), DCP130C/FAX2480C/FAX2580C/MFC230C/MFC240C/MFC240CE		
1	LP5493001	1	ENGINE UNIT ASSY (SP), DCP330C/DCP540C/DCP750CW/ MFC440CN/MFC660CN/MFC665CW/MFC665CWE/MFC845CW		chg
1-1	LP1030001	1	CARRIAGE MOTOR ASSY		
1-2	LP1034001	1	CR ENCODER STRIP		
1-3	LP3848005	1	INNER CHUTE ASSY		chg
1-3-1	LP1059001	1	REGISTRATION SENSOR ACTUATOR		
1-4	LP1076001	1	PAPER FEED MOTOR ASSY		
1-5	LP1471001	1	PF ENCODER DISK		
1-6	LG6762001	1	PF ENCODER/REGISTRATION SENSOR HARNESS		
1-7	LP1088001	1	PAPER PULL-IN GEAR SHAFT & PAPER PULL-IN ROLLER HOLDER ASSY		
1-8	000021206	1	SCREW BIND M2X12		
1-9	000300606	2	SCREW BIND M3X6		
1-10	000260406	2	SCREW BIND M2.6X4		
1-11	LP1033001	1	TIMING BELT		add
2	LP3530001	1	MAINTENANCE UNIT ASSY (SP)		
2-1	LG6721001	1	PURGE CAM SWITCH HARNESS ASSY		
2-2	LF7138001	1	TAPTITE PAN2 1.7X8		
~~3~~	~~LP1145001~~	~~1~~	~~HEAD COVER ASSY, EXCEPT FOR MFC230C~~		DEL
3	LP5946001	1	HEAD COVER ASSY		
4	LP1148001	1	FFC SUPPORT		
5	LP3532001	1	CARRIAGE PCB UNIT ASSY (SP)		
6	LP1154005	1	JAM CLEAR COVER ASSY, GRAY(1735)		
7	LP1933001	1	SF CHANGEOVER GEAR		
8	LP1934001	1	HS CHANGEOVER GEAR		
9	LP3494001	1	HS GEAR PLATE, EXCEPT FOR MFC230C/MFC240CE/MFC665CWE		
10	LP1102001	1	MODE SWITCHING LEVER & CLUTCH GEAR ASSY		
11	LP3422001	1	SPACER FILM(*), EXCEPT FOR MFC230C/MFC240CE/MFC665CWE		
12	085310816	2	TAPTITE BIND B M3X8		
13	087320616	1	TAPTITE CUP S M3X6		

(*)If your machine's belt grip of HEAD HOLDER has 3 cogs,
you need to order SPACER FILM

(*)If your machine's belt grip of HEAD HOLDER has 4 cogs,
you do NOT need to order SPACER FILM

www.drukparts.pl

4 CARTRIDGE CASE

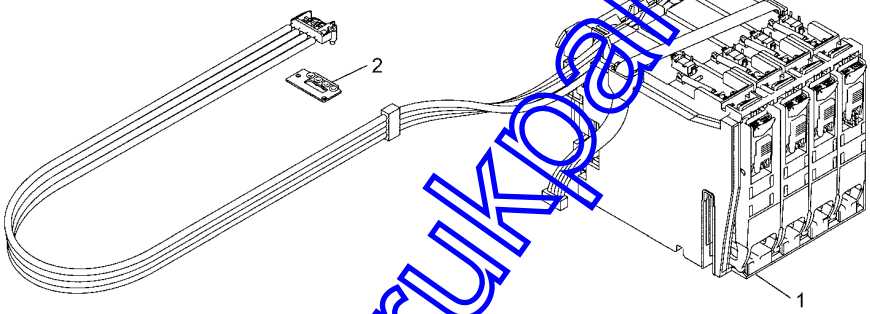

www.drukparts.pl

List4(CARTRIDGE CASE)

REF No	CODE	Q'TY	DESCRIPTION	RECOMMEND	REMARKS
1	LP3535001	1	INK REFILL ASSY (SP) EXCEPT FOR CHN		
1	LP5164001	1	INK REFILL ASSY (SP) FOR CHN		
2	LP3539001	1	HEAD JOINT RUBBER (SP)		

www.drukparts.pl

5 HEAD

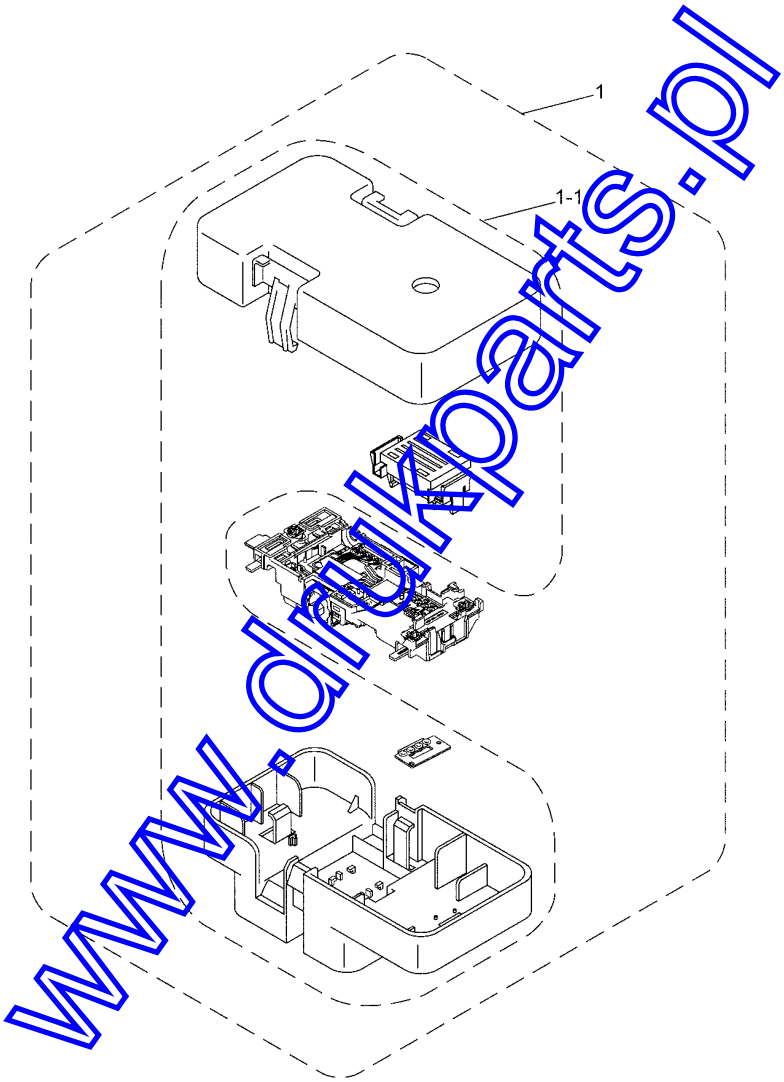

www.drukparts.pl

List5(HEAD)

REF No	CODE	Q'TY	DESCRIPTION	RECOMMEND	REMARKS
1	LK2179001	1	HEAD/CARRIAGE UNIT SUPPLY ASSY (without CARRIAGE PCB ASSY)		
1-1	LK2491001	1	PROTECTOR PARTS SUPPLY ASSY(SP)		add

www.drukparts.pl

6 PAPER TRAY

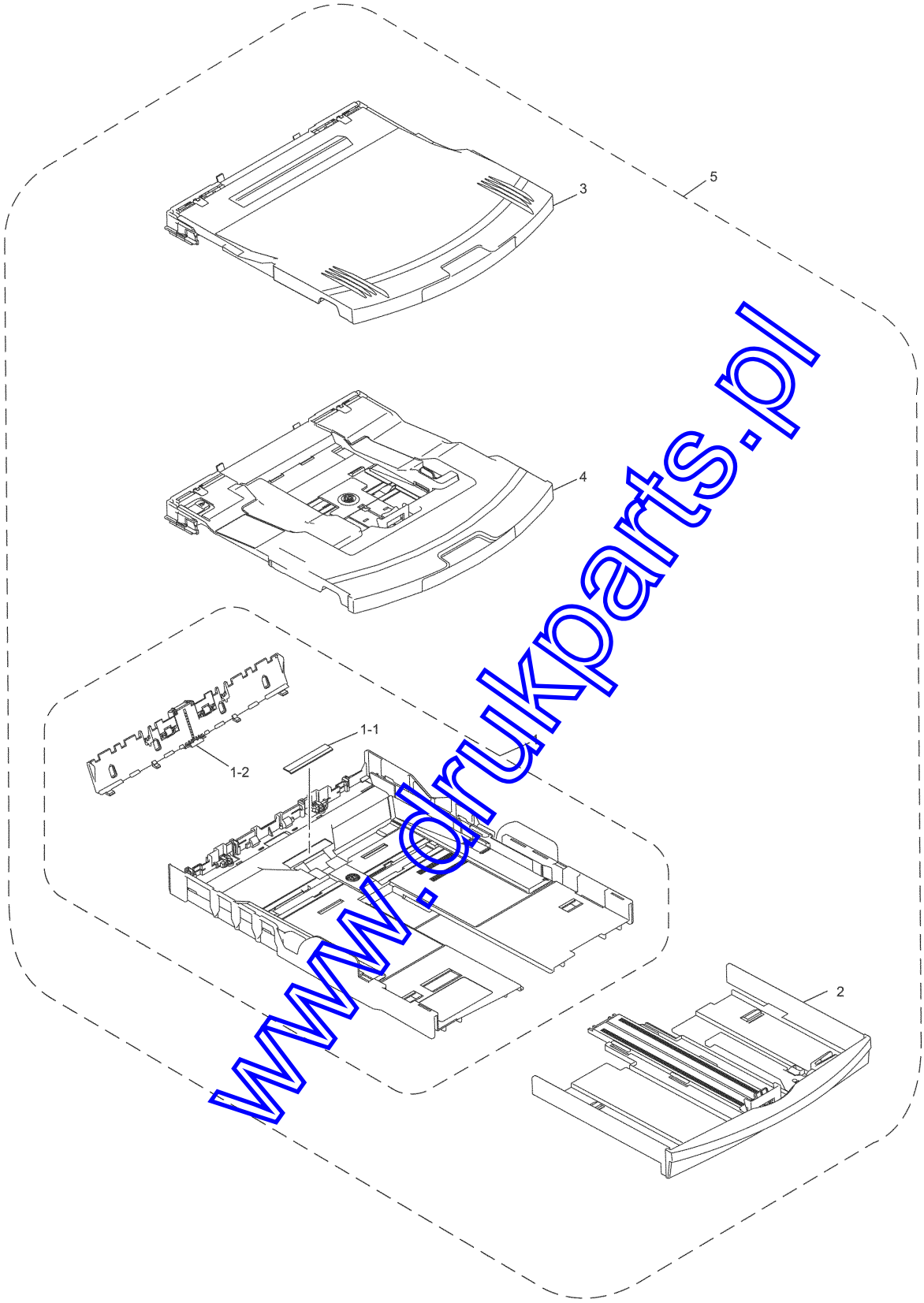

www.drukparts.pl

List6(PAPER TRAY)

REF No.	CODE	Q'TY	DESCRIPTION	RECOMMEND	REMARKS
1	LP1243005	1	PAPER TRAY ASSY, GRAY(1735)		
1-1	LP1575001	1	BASE PAD		
1-2	LP1246001	1	BANK ASSY		
2	LP1256003	1	PAPER TRAY EXTENSION ASSY, GRAY(1581), DCP130C/MFC240C/MFC240CE		
2	LP1256005	1	PAPER TRAY EXTENSION ASSY, DCP330C/DCP540CN/DCP750CW/FAX2480C/FAX2580C/ MFC230C/MFC440CN/MFC660CN/MFC665CW/MFC665CWE/ MFC845CW		
3	LP1260005	1	PAPER TRAY COVER ASSY, GRAY(1735), DCP130C/FAX2480C/FAX2580C/MFC230C/MFC240C/MFC240CE		
4	LP1361005	1	PAPER TRAY COVER ASSY, GRAY(1735), DCP330C/DCP540CN/DCP750CW/MFC440CN/ MFC660CN/MFC665CW/MFC665CWE/MFC845CW		
5	LS2001001	1	PAPER TRAY ASSY1 (SP), DCP130C/MFC240C/MFC240CE	√	CHG
5	LS2001002	1	PAPER TRAY ASSY1 (SP), FAX2480C/FAX2580C/MFC230C	√	CHG
5	LS2006001	1	PAPER TRAY ASSY2 (SP), DCP330C/DCP540CN/DCP750CW/ MFC440CN/MFC660CN/MFC665CW/MFC665CWE/MFC845CW	√	CHG

www.drukparts.pl

7 COVER

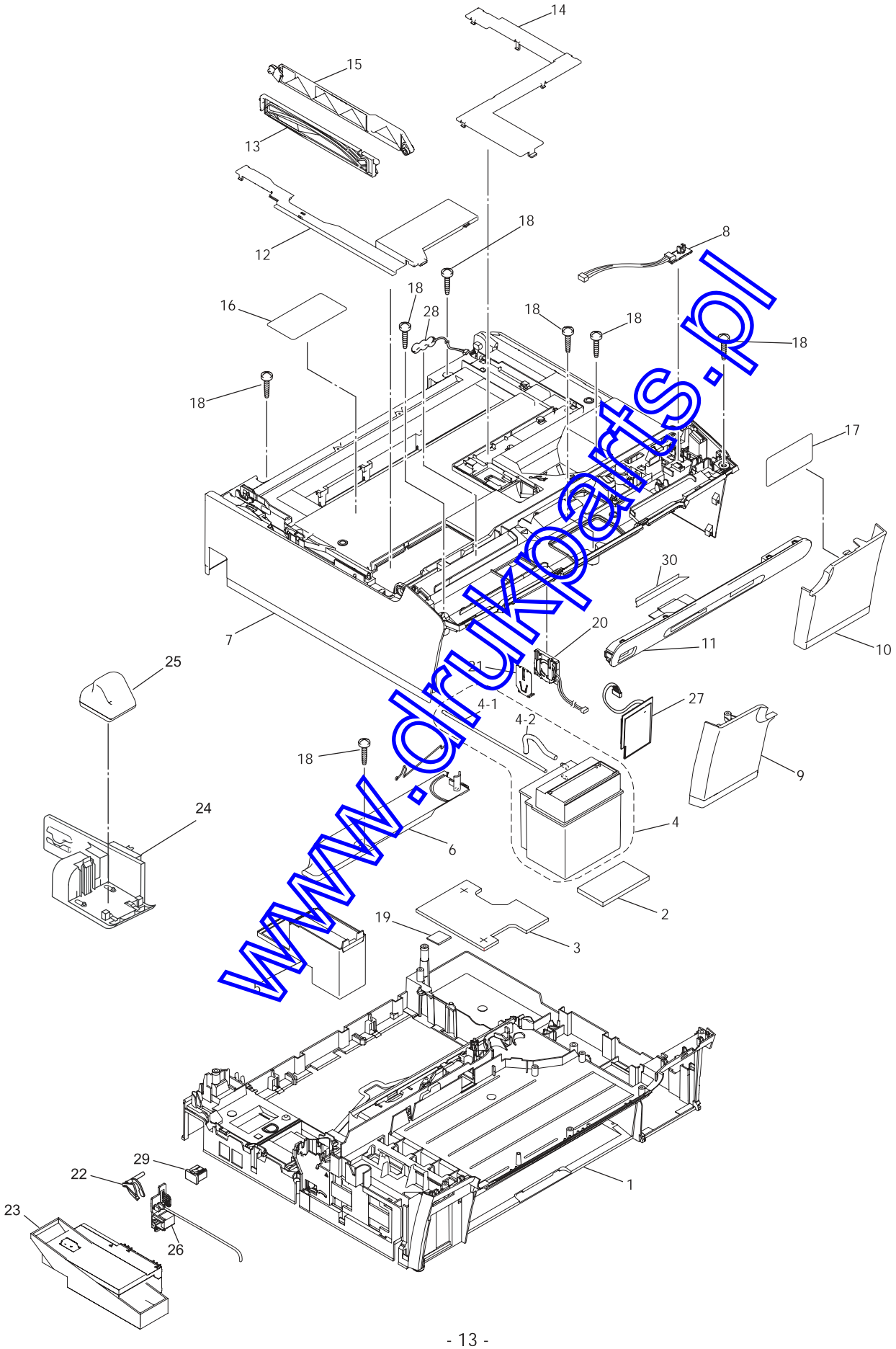

www.drukparts.pl

REF No.	CODE	Q'TY	DESCRIPTION	RECOMMEND	SYMBOL	REMARKS
1	LP1265005	1	LOWER COVER ASSY, GRAY(1735)			
2	LP1233001	1	INK ABSORBER FELT			
3	LP3035001	1	INK FOAM M			
4	LP5186001	1	INK ABSORBER TUBE ASSY			chg
4-1	LP1144001	1	MAIN DRAIN TUBE			add
4-2	LP3001001	1	OPENING TUBE TO THE ATMOSPHERIC AIR			add
5	LP1275001	1	FLUSHING BOX ASSY	√		
6	LP1282001	1	FLAT CABLE SUPPORT PLATE			
7	LP5953005	1	UPPER COVER, GRAY(1735), MFC230C			CHG
7	LP5950001	1	UPPER COVER, BLUE(6506), DCP130C			CHG
7	LP5951005	1	UPPER COVER, GRAY(1735), DCP330C			CHG
7	LP5952005	1	UPPER COVER, GRAY(1735), DCP540CN/DCP750CW			CHG
7	LP5964005	1	UPPER COVER, GRAY(1735), FAX2480C			CHG
7	LP5954005	1	UPPER COVER, GRAY(1735), FAX2580C			CHG
7	LP5953001	1	UPPER COVER, BLUE(6506), MFC240C/MFC240CE			CHG
7	LP5955005	1	UPPER COVER, GRAY(1735), MFC440CN			CHG
7	LP5956005	1	UPPER COVER, GRAY(1735), MFC660CN/MFC665CW/MFC665CWE			CHG
7	LP5958005	1	UPPER COVER, GRAY(1735), MFC845CW FOR US			CHG
7	LP5957005	1	UPPER COVER, GRAY(1735), MFC845CW FOR GER/UK/FRA/BEL/NLD/CHE/SPA/ITA/POR/ZAF/PND			CHG
8	LG6745001	1	SCANNER/INK CARTRIDGE COVER SENSOR ASSY		B53K857	
9	LP1293003	1	FRONT COVER, GRAY(1581), DCP130C/MFC230C/MFC240C/MFC240CE			
9	LP1293010	1	FRONT COVER, GRAY(1737), FAX2480C/FAX2580C			
9	LP1293004	1	FRONT COVER, METALLIC SILVER(1740), DCP330C/DCP540CN/MFC440CN/MFC660CN/ MFC665CW/MFC665CWE			
9	LP1293008	1	FRONT COVER, METALLIC SILVER(1805), DCP750CW/MFC845CW			
10	LP1294003	1	INK CARTRIDGE COVER, GRAY(1581), DCP130C/MFC230C/MFC240C/MFC240CE			
10	LP1294010	1	INK CARTRIDGE COVER, GRAY(1737), FAX2480C/FAX2580C			
10	LP1294004	1	INK CARTRIDGE COVER, METALLIC SILVER(1740), DCP330C/DCP540CN/MFC440CN/MFC660CN/ MFC665CW/MFC665CWE			
10	LP1294008	1	INK CARTRIDGE COVER, METALLIC SILVER(1805), DCP750CW/MFC845CW			
11	LP1295006	1	MEDIA MODULE COVER, METALLIC SILVER(1741), DCP130C/MFC240C/MFC240CE			
11	LP6001003	1	MEDIA MODULE COVER, GRAY(1581), MFC230C			
11	LP3071010	1	MEDIA MODULE COVER, GRAY(1737), FAX2480C/FAX2580C			
11	LP1295008	1	MEDIA MODULE COVER, METALLIC SILVER(1805), DCP330C/DCP540CN			
11	LP1552008	1	MEDIA MODULE COVER, METALLIC SILVER(1805), DCP750CW/MFC440CN/MFC660CN/MFC665CW/MFC665CWE			
11	LP1552004	1	MEDIA MODULE COVER, METALLIC SILVER(1740), MFC845CW			
12	LP1297001	1	HARNESS COVER, BLUE(6506), DCP130C/MFC240C/MFC240CE			
12	LP1297005	1	HARNESS COVER, GRAY(1735), DCP330C/DCP540CN/DCP750CW/FAX2480C/FAX2580C/ MFC230C/MFC440CN/MFC660CN/MFC665CW/ MFC665CWE/MFC845CW			
13	LP5979001	1	SCANNER COVER DAMPER			chg
14	LP5949001	1	CIS FLAT CABLE COVER, BLUE(6506), DCP130C/MFC240C/MFC240CE			CHG
14	LP5949005	1	CIS FLAT CABLE COVER, GRAY(1735), DCP330C/DCP540CN/DCP750CW/FAX2480C/FAX2580C/ MFC440CN/MFC660CN/MFC665CW/MFC665CWE/MFC845CW/MFC230C			CHG
15	LP5980002	1	SCANNER COVER STOPPER			chg
16	LP5943001	1	LABEL FOR COVER OPEN/CLOSE			chg
17	LP3329001	1	INK REPLACE LABEL			
18	085411216	7	TAPTITE BIND B M4X12			
19	LG7091001	1	THERMALLY CONDUCTIVE RUBBER			
20	LG6731001	1	SPEAKER UNIT, MFC230C/MFC240C/MFC240CE/MFC440CN			
20	LG6978001	1	SPEAKER UNIT, FAX2480C/FAX2580C/MFC660CN/MFC665CW/ MFC665CWE/MFC845CW			
21	LP1522001	1	SPEAKER HOLDER, MFC230C/MFC240C/MFC240CE/MFC440CN			
22	LF4993001	1	ACTUATOR H/S, MFC660CN/MFC665CW/MFC665CWE/FAX2480C			
23	LP3854001	1	HANDSET HOLDER ASSY, MFC660CN/MFC665CW/MFC665CWE/FAX2480C			
24	LP1879005	1	BRACKET, MFC845CW/FAX2580C FOR US			
25	LP1858001	1	CRADLE, MFC845CW/FAX2580C FOR US			

www.ukparts.pl

REF No.	CODE	Q'TY	DESCRIPTION	RECOMMEND	SYMBOL	REMARKS
25	LP3402001	1	CRADLE, MFC845CW FOR GER/UK/FRA/BEL/NLD/CHE/SPA/ITA/POR/ZAF/PND			
26	LG5474002	1	HOOK PCB ASSY, MFC660CN/MFC665CW/MFC665CWE/FAX2480C		B53K763	
27	LG6846001	1	WIRELESS PCB ASSY, DCP750CW/MFC665CW/MFC665CWE/MFC845CW	√		
28	LG5500001	1	BACKUP BATTERY, MFC660CN/MFC665CW/MFC665CWE/MFC845CW			
29	UF5745000	1	MJ COVER EXT, MFC240C/MFC440CN/MFC660CN/MFC845CW FOR GER/UK/FRA/BEL/AUS/ITA			
30	LP3822001	1	MEDIA COVER FILM, DCP330C/DCP540CN			
30	LP5318001	1	MEDIA COVER FILM 2, DCP750CW/MFC440CN/ MFC660CN/MFC665CWMFC665CWE//MFC845CW			add

www.drukparts.pl

8 PANEL1

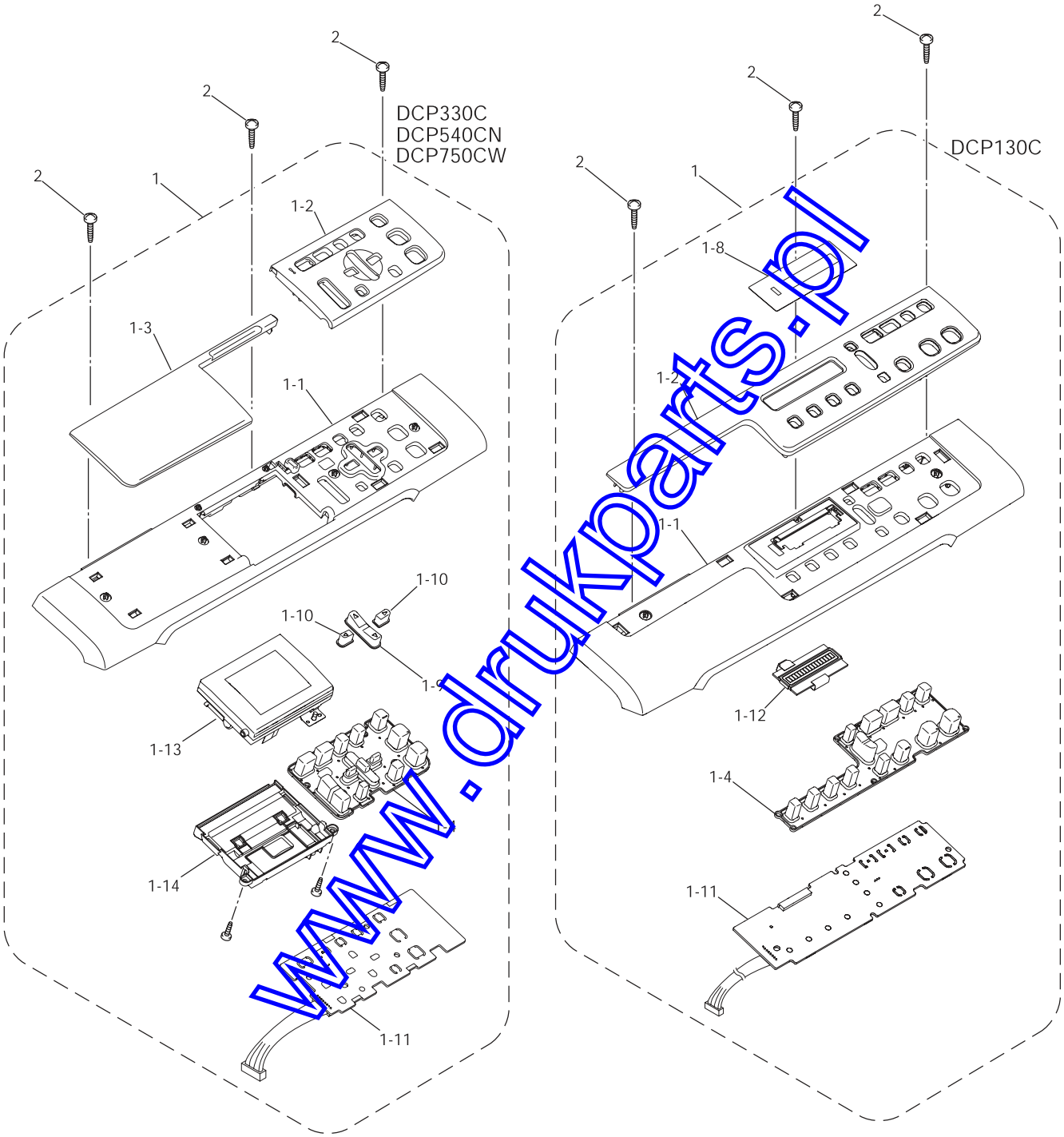

www.drukparts.pl

8 PANEL2

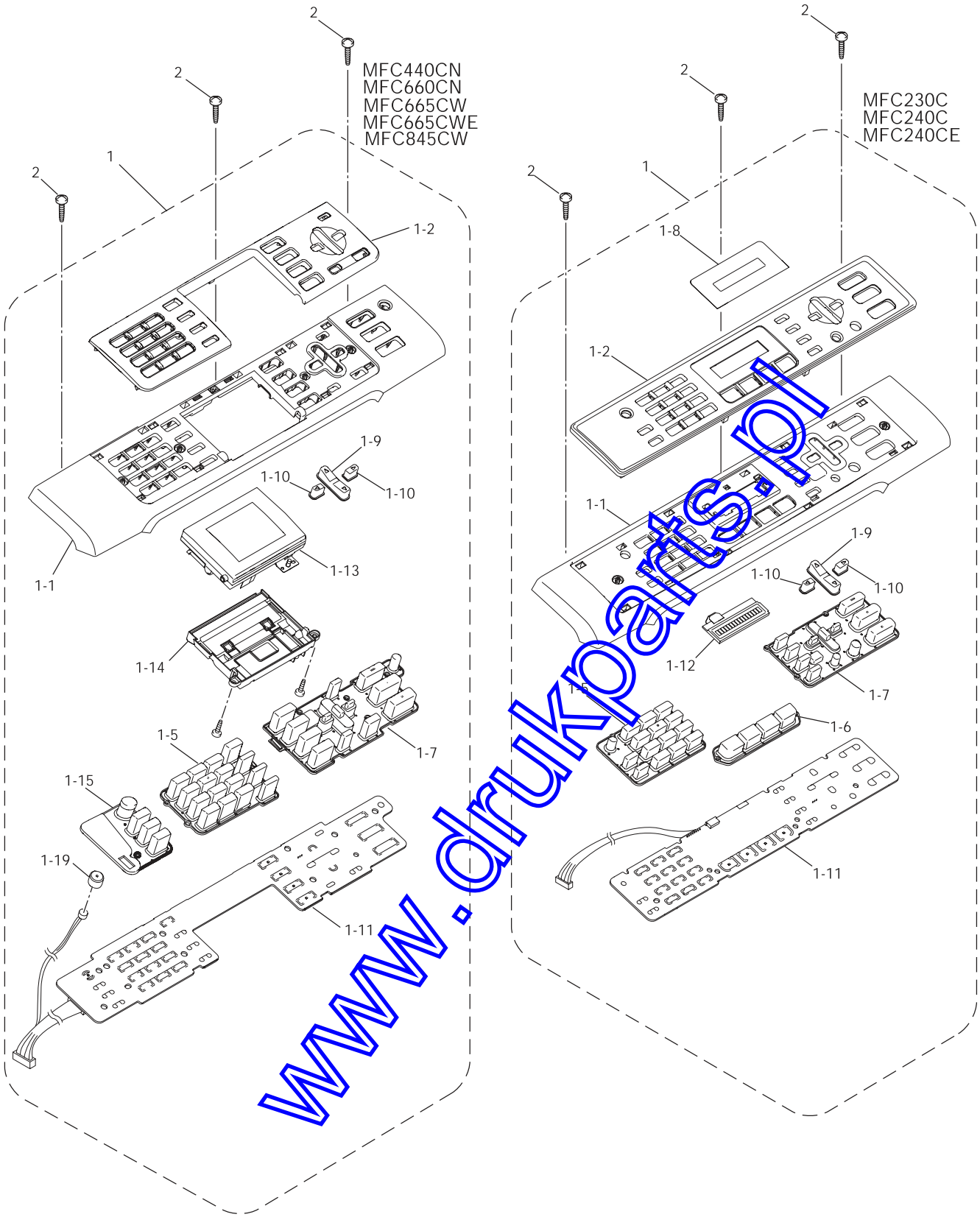

www.drukparts.pl

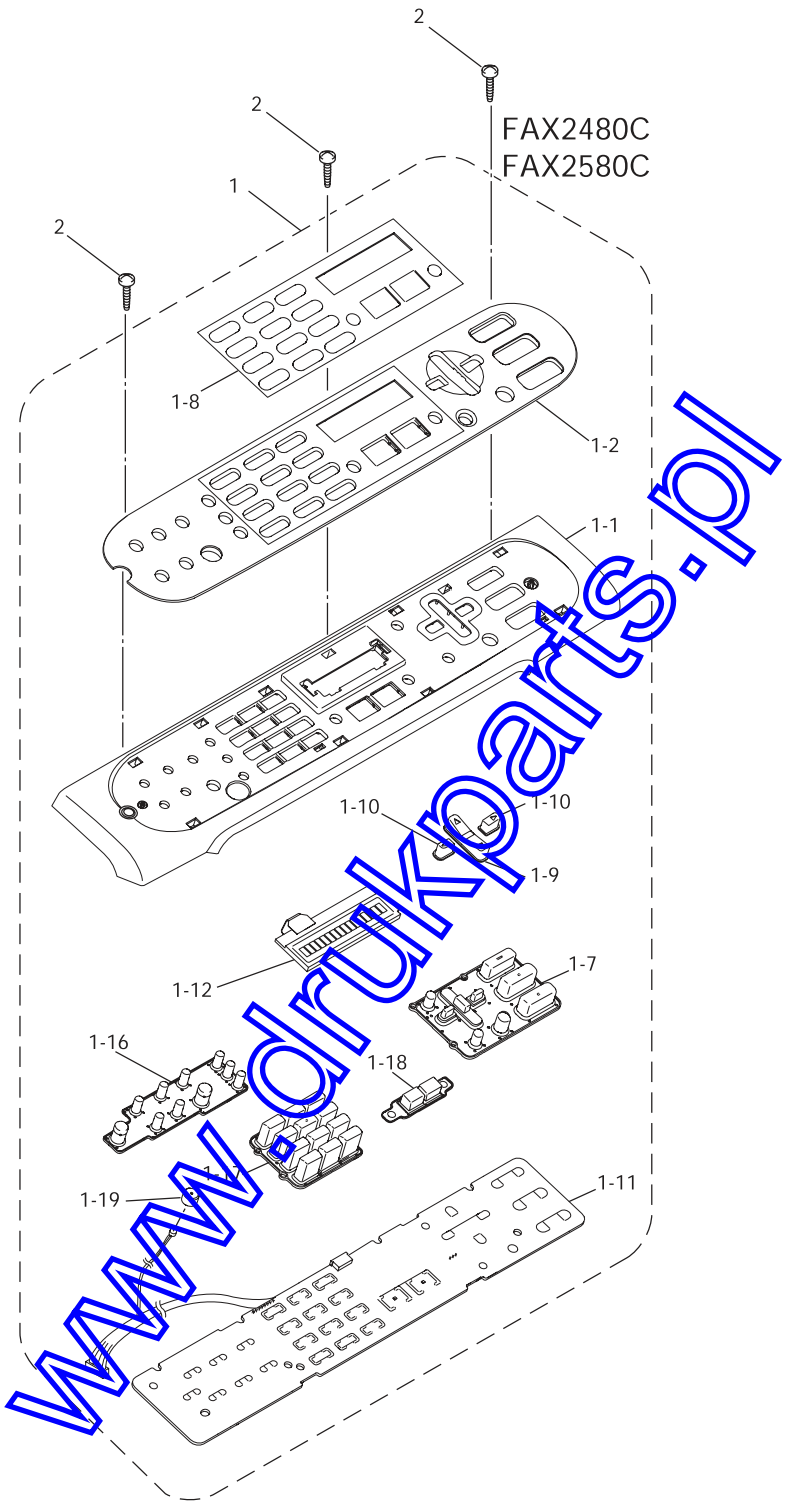

www.drukparts.pl

REF No.	CODE	Q'TY	DESCRIPTION	RECOMMEND	SYMBOL	REMARKS
1	LP1309001	1	CONTROL PANEL ASSY, DCP130C FOR US/CAN	√		
1	LP5114001	1	CONTROL PANEL ASSY, DCP130C FOR BRA	√		
1	LP1491001	1	CONTROL PANEL ASSY, DCP330C FOR US/CAN	√		
1	LP1494001	1	CONTROL PANEL ASSY, DCP540CN FOR US/CAN	√		
1	LP3073001	1	CONTROL PANEL ASSY, FAX2480C FOR US/CAN	√		
1	LP3639001	1	CONTROL PANEL ASSY, FAX2580C FOR US	√		
1	LP1454001	1	CONTROL PANEL ASSY, MFC240C/MFC240CE FOR US/CAN	√		
1	LP3428001	1	CONTROL PANEL ASSY, MFC240C FOR ARG/CHL	√		
1	LP3059001	1	CONTROL PANEL ASSY, MFC440CN FOR US/CAN	√		
1	LP3559001	1	CONTROL PANEL ASSY, MFC665CWMFC665CWE FOR US/CAN	√		
1	LP1881008	1	CONTROL PANEL ASSY, MFC845CW FOR US	√		
1	LP6004001	1	CONTROL PANEL ASSY, MFC230C	√		
1-1	LP1310003	1	CONTROL PANEL BASE, GRAY(1581), DCP130C FOR US/CAN			
1-1	LP1311003	1	CONTROL PANEL BASE, GRAY(1581), DCP130C FOR BRA			
1-1	LP1372004	1	CONTROL PANEL BASE, METALLIC SILVER(1746), DCP330C/DCP540CN			
1-1	LP3074010	1	CONTROL PANEL BASE, GRAY(1737), FAX2480C/FAX2580C			
1-1	LP1455003	1	CONTROL PANEL BASE, GRAY(1581), MFC230C/MFC240C/MFC240CE			
1-1	LP3060004	1	CONTROL PANEL BASE, METALLIC SILVER(1740), MFC440CN			
1-1	LP3560004	1	CONTROL PANEL BASE, METALLIC SILVER(1740), MFC665CW/MFC665CWE			
1-1	LP1882008	1	CONTROL PANEL BASE, METALLIC SILVER(1805), MFC845CW			
1-2	LP1314001	1	CONTROL PANEL, DCP130C FOR US/CAN			
1-2	LP3325001	1	CONTROL PANEL, DCP130C FOR BRA			
1-2	LP1493001	1	CONTROL PANEL, DCP330C			
1-2	LP1493004	1	CONTROL PANEL, DCP540CN			
1-2	LP3075011	1	PRINTED PANEL PLATE, GRAY(1736), FAX2480C			
1-2	LP3640004	1	PRINTED PANEL PLATE, GRAY(1740), FAX2580C			
1-2	LP1456001	1	PRINTED PANEL PLATE, BLUE(6506), MFC240C/MFC240CE FOR US/CAN			
1-2	LP3429001	1	PRINTED PANEL PLATE, BLUE(6506), MFC240C FOR ARG/CHL			
1-2	LP3062004	1	PRINTED PANEL PLATE, METALLIC SILVER(1740), MFC440CN			
1-2	LP3561008	1	PRINTED PANEL PLATE, METALLIC SILVER(1805), MFC665CW/MFC665CWE			
1-2	LP1883004	1	PRINTED PANEL PLATE, METALLIC SILVER(1740), MFC845CW			
1-2	LP6151005	1	PRINTED PANEL PLATE, GRAY(1735), MFC230C			
1-3	LP1492001	1	PRINTED PANEL PLATE, DCP330C			
1-3	LP1495004	1	PRINTED PANEL PLATE, DCP540CN			
1-4	LP1312001	1	RUBBER KEYPAD, DCP130C			
1-4	LP1373001	1	RUBBER KEYPAD, DCP330C			
1-4	LP1373005	1	RUBBER KEYPAD, DCP540CN			
1-5	LP1458001	1	PRINTED RUBBER KEY L, MFC240C/MFC240CE			
1-5	LP1458005	1	PRINTED RUBBER KEY L, MFC230C			
1-5	LP1561005	1	PRINTED RUBBER KEY L, MFC440CN/MFC665CW/MFC665CWE/MFC845CW			
1-6	LP1460001	1	PRINTED RUBBER KEY CENTER, MFC230C/MFC240C/MFC240CE			
1-7	LP3083005	1	PRINTED RUBBER KEY R, FAX2480C			
1-7	LP3083007	1	PRINTED RUBBER KEY R, FAX2580C			
1-7	LP1462005	1	PRINTED RUBBER KEY R, MFC230C			
1-7	LP1462001	1	PRINTED RUBBER KEY R, MFC240CMFC240CE			
1-7	LP1559005	1	PRINTED RUBBER KEY R, MFC440CN/MFC665CW/MFC665CWE/MFC845CW			
1-8	LP1316001	1	LCD SHEET, DCP130C			
1-8	LP3085001	1	LCD SHEET, FAX2480C			
1-8	LP6007001	1	LCD SHEET, MFC230C			
1-8	LP1464001	1	LCD SHEET, MFC240C/MFC240CE FOR US/CAN			
1-8	LP3442001	1	LCD SHEET, MFC240C FOR ARG/CHL			
1-9	LP1475005	1	4WAY KEY CENTER EXCEPT FOR DCP130C			
1-10	LP1476005	2	4WAY KEY L/R EXCEPT FOR DCP130C			
1-11	LG6701001	1	CONTROL PANEL PCB ASSY, DCP130C		B53K860	
1-11	LG6703001	1	CONTROL PANEL PCB ASSY, DCP330C/DCP540CN		B53K861	
1-11	LG7027001	1	CONTROL PANEL PCB ASSY, FAX2480C		B53K889	
1-11	LG7027003	1	CONTROL PANEL PCB ASSY, FAX2580C		B53K889	
1-11	LG6705001	1	CONTROL PANEL PCB ASSY, MFC230C/MFC240C/MFC240CE		B53K862	
1-11	LG6854001	1	CONTROL PANEL PCB ASSY, MFC440CN		B53K883	
1-11	LG6854002	1	CONTROL PANEL PCB ASSY, MFC665CW/MFC665CWE/MFC845CW		B53K883	
1-12	LG6092001	1	LCD, DCP130C/FAX2480C/FAX2580C/ MFC230C/MFC240C/MFC240CE			
1-13	LP1513005	1	LCD UNIT ASSY, DCP330C			

www.drukparts.pl

List8(PANEL US)

REF No.	CODE	Q'TY	DESCRIPTION	RECOMMEND	SYMBOL	REMARKS
1-13	LP1514005	1	LCD UNIT ASSY, DCP540CN			
1-13	LP3063001	1	LCD UNIT ASSY, MFC440CN			
1-13	LP3562001	1	LCD UNIT ASSY, MFC665CW/MFC665CWE			
1-13	LP1884001	1	LCD UNIT ASSY, MFC845CW			
1-14	LP1382003	1	PANEL LOWER COVER, DCP330C/DCP540CN			
1-14	LP1568003	1	PANEL LOWER COVER, MFC440CN/MFC665CW/MFC665CWE			
1-14	LP1568007	1	PANEL LOWER COVER, MFC845CW			
1-15	LP1563005	1	PRINTED RUBBER KEY MC, MFC665CW/MFC665CWE/MFC845CW			
1-16	LP3077005	1	PRINTED RUBBER KEY FUNCTION, FAX2480C			
1-16	LP3641007	1	PRINTED RUBBER KEY FUNCTION, FAX2580C			
1-17	LP3079005	1	PRINTED RUBBER KEY TEN, FAX2480C			
1-17	LP3079007	1	PRINTED RUBBER KEY TEN, FAX2580C			
1-18	LP3081005	1	PRINTED RUBBER KEY MODE, FAX2480C			
1-18	LP3081007	1	PRINTED RUBBER KEY MODE, FAX2580C			
1-19	UF6916001	1	MIC COVER, FAX2580C/MFC665CW/MFC665CWE/MFC845CW			
2	087311016	3	TAPTITE CUP B M3X10			

www.drukparts.pl

REF No.	CODE	Q'TY	DESCRIPTION	RECOMMEND	SYMBOL	REMARKS
1	LP3655001	1	CONTROL PANEL ASSY, DCP130C FOR GER/AUS	√		
1	LP3656001	1	CONTROL PANEL ASSY, DCP330C FOR GER/AUS	√		
1	LP3657001	1	CONTROL PANEL ASSY, DCP540CN FOR GER/AUS	√		
1	LP3683001	1	CONTROL PANEL ASSY, DCP750CW FOR GER	√		
1	LP3409001	1	CONTROL PANEL ASSY, MFC240C FOR GER/AUS	√		
1	LP5158001	1	CONTROL PANEL ASSY, MFC440CN FOR GER/AUS	√		
1	LP5002001	1	CONTROL PANEL ASSY, MFC660CN FOR GER/AUS	√		
1	LP5829008	1	CONTROL PANEL ASSY, MFC845CW FOR GER	√		
1	LP3648001	1	CONTROL PANEL ASSY, DCP130C FOR UK/ISR/ZAF/ASA/OCE/PND/EEU	√		
1	LP3652001	1	CONTROL PANEL ASSY, DCP330C FOR UK/ZAF/ASA/OCE/PND/EEU	√		
1	LP3650001	1	CONTROL PANEL ASSY, DCP540CN FOR UK/ZAF/ASA/OCE/PND/EEU	√		
1	LP3658001	1	CONTROL PANEL ASSY, DCP750CW FOR UK/PND	√		
1	LP1714001	1	CONTROL PANEL ASSY, MFC240C FOR UK/BEL/CHE/ISR/ZAF/EEU	√		
1	LP3066001	1	CONTROL PANEL ASSY, MFC440CN FOR UK/BEL/CHE/GNR	√		
1	LP1555001	1	CONTROL PANEL ASSY, MFC660CN FOR UK/BEL/CHE/ZAF	√		
1	LP3564008	1	CONTROL PANEL ASSY, MFC845CW FOR UK/BEL/CHE/ZAF	√		
1	LP5063001	1	CONTROL PANEL ASSY, MFC240C FOR PND	√		
1	LP5362001	1	CONTROL PANEL ASSY, MFC440CN FOR PND	√		
1	LP5873008	1	CONTROL PANEL ASSY, MFC845CW FOR PND	√		
1	LP1709001	1	CONTROL PANEL ASSY, DCP130C FOR FRA/CHE/IBR	√		
1	LP1371001	1	CONTROL PANEL ASSY, DCP330C FOR FRA/CHE/IBR	√		
1	LP1443001	1	CONTROL PANEL ASSY, DCP540CN FOR FRA/CHE/IBR	√		
1	LP1642001	1	CONTROL PANEL ASSY, DCP750CW FOR FRA/CHE/IBR	√		
1	LP3423001	1	CONTROL PANEL ASSY, MFC240C FOR FRA	√		
1	LP5167001	1	CONTROL PANEL ASSY, MFC440CN FOR FRA	√		
1	LP5010001	1	CONTROL PANEL ASSY, MFC660CN FOR FRA	√		
1	LP5840008	1	CONTROL PANEL ASSY, MFC845CW FOR FRA	√		
1	LP5049001	1	CONTROL PANEL ASSY, MFC240C FOR NLD	√		
1	LP5346001	1	CONTROL PANEL ASSY, MFC440CN FOR NLD	√		
1	LP5369001	1	CONTROL PANEL ASSY, MFC660CN FOR NLD	√		
1	LP5848008	1	CONTROL PANEL ASSY, MFC845CW FOR NLD	√		
1	LP3428001	1	CONTROL PANEL ASSY, MFC240C FOR SPA	√		
1	LP5172001	1	CONTROL PANEL ASSY, MFC440CN FOR SPA	√		
1	LP5019001	1	CONTROL PANEL ASSY, MFC660CN FOR SPA	√		
1	LP5855008	1	CONTROL PANEL ASSY, MFC845CW FOR SPA	√		
1	LP3649001	1	CONTROL PANEL ASSY, DCP130C FOR ITA	√		
1	LP3653001	1	CONTROL PANEL ASSY, DCP330C FOR ITA	√		
1	LP3651001	1	CONTROL PANEL ASSY, DCP540CN FOR ITA	√		
1	LP3695001	1	CONTROL PANEL ASSY, DCP750CW FOR ITA	√		
1	LP5861008	1	CONTROL PANEL ASSY, MFC845CW FOR ITA	√		
1	LP3433001	1	CONTROL PANEL ASSY, MFC240C FOR ITA	√		
1	LP5177001	1	CONTROL PANEL ASSY, MFC440CN FOR ITA	√		
1	LP5025001	1	CONTROL PANEL ASSY, MFC660CN FOR ITA	√		
1	LP5058001	1	CONTROL PANEL ASSY, MFC240C FOR POR	√		
1	LP5355001	1	CONTROL PANEL ASSY, MFC440CN FOR POR	√		
1	LP5375001	1	CONTROL PANEL ASSY, MFC660CN FOR POR	√		
1	LP5866008	1	CONTROL PANEL ASSY, MFC845CW FOR POR	√		
1	LP5322001	1	CONTROL PANEL ASSY, DCP130C FOR CHN	√		
1	LP5328001	1	CONTROL PANEL ASSY, DCP330C FOR CHN	√		
1	LP5334001	1	CONTROL PANEL ASSY, DCP540CN FOR CHN	√		
1	LP5693001	1	CONTROL PANEL ASSY, FAX2480C FOR CHN	√		
1	LS4339001	1	CONTROL PANEL ASSY, MFC230C FOR CHN	√		
1	LP5203001	1	CONTROL PANEL ASSY, MFC240C FOR CHN	√		
1	LP5388001	1	CONTROL PANEL ASSY, MFC440CN FOR CHN	√		
1	LP5552001	1	CONTROL PANEL ASSY, MFC665CW FOR CHN	√		
1	LP5700001	1	CONTROL PANEL ASSY, FAX2480C FOR ASA/OCE	√		
1	LP5409001	1	CONTROL PANEL ASSY, MFC240C FOR ASA/OCE	√		
1	LP5386001	1	CONTROL PANEL ASSY, MFC440CN FOR ASA/OCE	√		
1	LP5558001	1	CONTROL PANEL ASSY, MFC665CW FOR ASA/OCE	√		
1	LP5119001	1	CONTROL PANEL ASSY, DCP130C FOR RUS	√		
1	LP5128001	1	CONTROL PANEL ASSY, DCP330C FOR RUS	√		
1	LP5135001	1	CONTROL PANEL ASSY, DCP540CN FOR RUS	√		
1	LP5150001	1	CONTROL PANEL ASSY, MFC240C FOR RUS	√		
1-1	LP1311003	1	CONTROL PANEL BASE, GRAY(1581), DCP130C EXCEPT FOR CHN			
1-1	LP1372004	1	CONTROL PANEL BASE, METALLIC SILVER(1740), DCP330C/DCP540CN			
1-1	LP1372008	1	CONTROL PANEL BASE, METALLIC SILVER(1805), DCP750CW			
1-1	LP1455003	1	CONTROL PANEL BASE, GRAY(1581), MFC240C EXCEPT FOR CHN			
1-1	LP1502003	1	CONTROL PANEL BASE, GRAY(1581), DCP130C FOR CHN			

www.clickparts.pl

REF No.	CODE	Q'TY	DESCRIPTION	RECOMMEND	SYMBOL	REMARKS
1-1	LP3236010	1	CONTROL PANEL BASE, GRAY(1737), FAX2480C FOR CHN			
1-1	LP3074010	1	CONTROL PANEL BASE, GRAY(1737), FAX2480C FOR ASA/OCE			
1-1	LP1503003	1	CONTROL PANEL BASE, GRAY(1581), MFC230C/MFC240C FOR CHN			
1-1	LP5159004	1	PRINTED PANEL BASE, METALLIC SILVER(1740), MFC440CN FOR GER/AUS			
1-1	LP3067004	1	PRINTED PANEL BASE, METALLIC SILVER(1740), MFC440CN FOR UK/BEL/CHE/ASA/GNR/OCE/PND			
1-1	LP5168004	1	PRINTED PANEL BASE, METALLIC SILVER(1740), MFC440CN FOR FRA			
1-1	LP5347004	1	PRINTED PANEL BASE, METALLIC SILVER(1740), MFC440CN FOR NLD			
1-1	LP5173004	1	PRINTED PANEL BASE, METALLIC SILVER(1740), MFC440CN FOR SPA			
1-1	LP5178004	1	PRINTED PANEL BASE, METALLIC SILVER(1740), MFC440CN FOR ITA			
1-1	LP5356004	1	PRINTED PANEL BASE, METALLIC SILVER(1740), MFC440CN FOR POR			
1-1	LP5105004	1	PRINTED PANEL BASE, METALLIC SILVER(1740), MFC440CN FOR CHN			
1-1	LP5003004	1	PRINTED PANEL BASE, METALLIC SILVER(1740), MFC660CN FOR GER/AUS			
1-1	LP1565004	1	PRINTED PANEL BASE, METALLIC SILVER(1740), MFC660CN FOR UK/BEL/CHE/ZAF			
1-1	LP5011004	1	PRINTED PANEL BASE, METALLIC SILVER(1740), MFC660CN FOR FRA			
1-1	LP5370004	1	PRINTED PANEL BASE, METALLIC SILVER(1740), MFC660CN FOR NLD			
1-1	LP5020004	1	PRINTED PANEL BASE, METALLIC SILVER(1740), MFC660CN FOR SPA			
1-1	LP5026004	1	PRINTED PANEL BASE, METALLIC SILVER(1740), MFC660CN FOR ITA			
1-1	LP5376004	1	PRINTED PANEL BASE, METALLIC SILVER(1740), MFC660CN FOR POR			
1-1	LP5108004	1	PRINTED PANEL BASE, METALLIC SILVER(1740), MFC665CW FOR CHN			
1-1	LP5101004	1	PRINTED PANEL BASE, METALLIC SILVER(1740), MFC665CW FOR ASA/OCE			
1-1	LP5830008	1	PRINTED PANEL BASE, METALLIC SILVER(1805), MFC845CW FOR GER			
1-1	LP3565008	1	PRINTED PANEL BASE, METALLIC SILVER(1805), MFC845CW FOR UK/BEL/CHE/ZAF/PND			
1-1	LP5842008	1	PRINTED PANEL BASE, METALLIC SILVER(1805), MFC845CW FOR FRA			
1-1	LP5849008	1	PRINTED PANEL BASE, METALLIC SILVER(1805), MFC845CW FOR NLD			
1-1	LP5856008	1	PRINTED PANEL BASE, METALLIC SILVER(1805), MFC845CW FOR SPA			
1-1	LP5862008	1	PRINTED PANEL BASE, METALLIC SILVER(1805), MFC845CW FOR ITA			
1-1	LP5867008	1	PRINTED PANEL BASE, METALLIC SILVER(1805), MFC845CW FOR POR			
1-2	LP3277001	1	CONTROL PANEL R, DCP130C FOR GER/CHE/AUS			
1-2	LP3448001	1	CONTROL PANEL R, DCP330C FOR GER/CHE/AUS			
1-2	LP3448004	1	CONTROL PANEL R, DCP540CN/DCP750CW FOR GER/CHE/AUS			
1-2	LP1711001	1	CONTROL PANEL R, DCP130C FOR UK/ISR/ZAF/ASA/OCE/PND/EEU			
1-2	LP1446001	1	CONTROL PANEL R, DCP330C FOR UK/ZAF/ASA/OCE/PND/EEU			
1-2	LP1446004	1	CONTROL PANEL R, DCP540CN/DCP750CW FOR UK/ZAF/ASA/OCE/PND/EEU			
1-2	LP3306001	1	CONTROL PANEL R, DCP130C FOR FRA/CHE <FRENCH>			
1-2	LP3311001	1	CONTROL PANEL R, DCP130C FOR FRA <DUTCH>			
1-2	LP3454001	1	CONTROL PANEL R, DCP330C FOR FRA/CHE <FRENCH>			
1-2	LP3457001	1	CONTROL PANEL R, DCP330C FOR FRA <DUTCH>			
1-2	LP3454004	1	CONTROL PANEL R, DCP540CN/DCP750CW FOR FRA/CHE <FRENCH>			
1-2	LP3457004	1	CONTROL PANEL R, DCP540CN/DCP750CW FOR FRA <DUTCH>			

www.drukparts.pl

REF No.	CODE	Q'TY	DESCRIPTION	RECOMMEND	SYMBOL	REMARKS
1-2	LP3276001	1	CONTROL PANEL R, DCP130C FOR CHE <GERMAN>			
1-2	LP3447001	1	CONTROL PANEL R, DCP330C FOR CHE <GERMAN>			
1-2	LP3316001	1	CONTROL PANEL R, DCP130C FOR ITA			
1-2	LP3466001	1	CONTROL PANEL R, DCP330C FOR ITA			
1-2	LP3466004	1	CONTROL PANEL R, DCP540CN/DCP750CW FOR ITA			
1-2	LP5323001	1	CONTROL PANEL R, DCP130C FOR CHN			
1-2	LP5329001	1	CONTROL PANEL R, DCP330C FOR CHN			
1-2	LP5329004	1	CONTROL PANEL R, DCP540CN FOR CHN			
1-2	LP5120001	1	CONTROL PANEL R, DCP130C FOR RUS			
1-2	LP5129001	1	CONTROL PANEL R, DCP330C FOR RUS			
1-2	LP5129004	1	CONTROL PANEL R, DCP540CN FOR RUS			
1-2	LP3321001	1	CONTROL PANEL R, DCP130C FOR IBR <SPANISH>			
1-2	LP3324001	1	CONTROL PANEL R, DCP130C FOR IBR <PORTUGUESE>			
1-2	LP3471001	1	CONTROL PANEL R, DCP330C FOR IBR <SPANISH>			
1-2	LP3474001	1	CONTROL PANEL R, DCP330C FOR IBR <PORTUGUESE>			
1-2	LP3471004	1	CONTROL PANEL R, DCP540CN/DCP750CW FOR IBR <SPANISH>			
1-2	LP3474004	1	CONTROL PANEL R, DCP540CN/DCP750CW FOR IBR <PORTUGUESE>			
1-2	LP3769011	1	PRINTED PANEL PLATE, GRAY(1736), FAX2480C FOR CHN			
1-2	LP5104011	1	PRINTED PANEL PLATE, GRAY(1736), FAX2480C FOR ASA/OCE			
1-2	LP3410001	1	PRINTED PANEL PLATE, BLUE(6506), MFC240C FOR GER/AUS			
1-2	LP5160004	1	PRINTED PANEL PLATE, METALLIC SILVER(1740), MFC440CN FOR GER/AUS			
1-2	LP5004008	1	PRINTED PANEL PLATE, METALLIC SILVER(1805), MFC660CN FOR GER/AUS			
1-2	LP5831004	1	PRINTED PANEL PLATE, METALLIC SILVER(1740), MFC845CW FOR GER			
1-2	LP1715001	1	PRINTED PANEL PLATE, BLUE(6506), MFC240C FOR UK/BEL/CHE/ISR/ZAF/EEU			
1-2	LP3068004	1	PRINTED PANEL PLATE, METALLIC SILVER(1740), MFC440CN FOR UK/BEL/CHE/GNR			
1-2	LP1557008	1	PRINTED PANEL PLATE, METALLIC SILVER(1805), MFC660CN FOR UK/BEL/CHE/ZAF			
1-2	LP3566004	1	PRINTED PANEL PLATE, METALLIC SILVER(1740), MFC845CW FOR UK/BEL/CHE/ZAF			
1-2	LP3424001	1	PRINTED PANEL PLATE, BLUE(6506), MFC240C FOR FRA			
1-2	LP5169004	1	PRINTED PANEL PLATE, METALLIC SILVER(1740), MFC440CN FOR FRA			
1-2	LP5012008	1	PRINTED PANEL PLATE, METALLIC SILVER(1805), MFC660CN FOR FRA			
1-2	LP5841004	1	PRINTED PANEL PLATE, METALLIC SILVER(1740), MFC845CW FOR FRA			
1-2	LP5050001	1	PRINTED PANEL PLATE, BLUE(6506), MFC240C FOR NLD			
1-2	LP5348004	1	PRINTED PANEL PLATE, METALLIC SILVER(1740), MFC440CN FOR NLD			
1-2	LP5371008	1	PRINTED PANEL PLATE, METALLIC SILVER(1805), MFC660CN FOR NLD			
1-2	LP5850004	1	PRINTED PANEL PLATE, METALLIC SILVER(1740), MFC845CW FOR NLD			
1-2	LP3429001	1	PRINTED PANEL PLATE, BLUE(6506), MFC240C FOR SPA			
1-2	LP5174004	1	PRINTED PANEL PLATE, METALLIC SILVER(1740), MFC440CN FOR SPA			
1-2	LP5021008	1	PRINTED PANEL PLATE, METALLIC SILVER(1805), MFC660CN FOR SPA			
1-2	LP5857004	1	PRINTED PANEL PLATE, METALLIC SILVER(1740), MFC845CW FOR SPA			
1-2	LP3434001	1	PRINTED PANEL PLATE, BLUE(6506), MFC240C FOR ITA			
1-2	LP5179004	1	PRINTED PANEL PLATE, METALLIC SILVER(1740), MFC440CN FOR ITA			
1-2	LP5027008	1	PRINTED PANEL PLATE, METALLIC SILVER(1805), MFC660CN FOR ITA			
1-2	LP5863004	1	PRINTED PANEL PLATE, METALLIC SILVER(1740), MFC845CW FOR ITA			
1-2	LP5059001	1	PRINTED PANEL PLATE, BLUE(6506), MFC240C FOR POR			
1-2	LP5357004	1	PRINTED PANEL PLATE, METALLIC SILVER(1740), MFC440CN FOR POR			
1-2	LP5377008	1	PRINTED PANEL PLATE, METALLIC SILVER(1805), MFC660CN FOR POR			
1-2	LP5868004	1	PRINTED PANEL PLATE, METALLIC SILVER(1740), MFC845CW FOR POR			
1-2	LS4344005	1	PRINTED PANEL PLATE, GRAY(1735), MFC230C FOR CHN			
1-2	LP5204001	1	PRINTED PANEL PLATE, BLUE(6506), MFC240C FOR CHN			
1-2	LP5107004	1	PRINTED PANEL PLATE, METALLIC SILVER(1740), MFC440CN FOR CHN			

www.drukparts.pl

REF No.	CODE	Q'TY	DESCRIPTION	RECOMMEND	SYMBOL	REMARKS
1-2	LP5110008	1	PRINTED PANEL PLATE, METALLIC SILVER(1805), MFC665CW FOR CHN			
1-2	LP5410001	1	PRINTED PANEL PLATE, BLUE(6506), MFC240C FOR ASA/OCE			
1-2	LP5100004	1	PRINTED PANEL PLATE, METALLIC SILVER(1740), MFC440CN FOR ASA/OCE			
1-2	LP5102008	1	PRINTED PANEL PLATE, METALLIC SILVER(1805), MFC665CW FOR ASA/OCE			
1-2	LP5151001	1	PRINTED PANEL PLATE, BLUE(6506), MFC240C FOR RUS			
1-2	LP5064001	1	PRINTED PANEL PLATE, BLUE(6506), MFC240C FOR PND			
1-2	LP5363004	1	PRINTED PANEL PLATE, METALLIC SILVER(1740), MFC440CN FOR PND			
1-2	LP5874004	1	PRINTED PANEL PLATE, METALLIC SILVER(1740), MFC845CW FOR PND			
1-3	LP1472001	1	CONTROL PANEL L, DCP330C			
1-3	LP1474004	1	CONTROL PANEL L, DCP540CN			
1-3	LP1643004	1	CONTROL PANEL L, DCP750CW			
1-4	LP1312001	1	RUBBER KEYPAD, DCP130C			
1-4	LP1373001	1	RUBBER KEYPAD, DCP330C			
1-4	LP1373005	1	RUBBER KEYPAD, DCP540CN/DCP750CW			
1-5	LP1458001	1	PRINTED RUBBER KEY L, MFC240C			
1-5	LP1458005	1	PRINTED RUBBER KEY L, MFC230C			
1-5	LP1561005	1	PRINTED RUBBER KEY L, MFC440CN/MFC660CN/MFC665CW/MFC845CW			
1-6	LP1460001	1	PRINTED RUBBER KEY CENTER, MFC230C/MFC240C			
1-7	LP3083005	1	PRINTED RUBBER KEY R, FAX2480C			
1-7	LP1462005	1	PRINTED RUBBER KEY R, MFC230C			
1-7	LP1462001	1	PRINTED RUBBER KEY R, MFC240C			
1-7	LP1559005	1	PRINTED RUBBER KEY R, MFC440CN/MFC660CN/MFC665CW/MFC845CW			
1-8	LP1316001	1	LCD SHEET, DCP130C			
1-8	LP5190001	1	LCD SHEET, FAX2480C FOR CHN			
1-8	LP5103001	1	LCD SHEET, FAX2480C FOR ASA/OCE			
1-8	LP3440001	1	LCD SHEET, MFC240C FOR GER/AUS			
1-8	LP1464001	1	LCD SHEET, MFC240C FOR UK/BEL/CHE/ISR/ZAF/ASA/OCE/PND/EEU			
1-8	LP3441001	1	LCD SHEET, MFC240C FOR FRA			
1-8	LP5051001	1	LCD SHEET, MFC240C FOR NLD			
1-8	LP3442001	1	LCD SHEET, MFC240C FOR SPA			
1-8	LP3443001	1	LCD SHEET, MFC240C FOR ITA			
1-8	LP5060001	1	LCD SHEET, MFC240C FOR POR			
1-8	LP5205001	1	LCD SHEET, MFC240C FOR CHN			
1-8	LS2996001	1	LCD SHEET, MFC230C FOR CHN			
1-8	LP5152001	1	LCD SHEET, MFC240C FOR RUS			
1-9	LP1475005	1	4WAY KEY CENTER EXCEPT FOR DCP130C			
1-10	LP1476005	2	4WAY KEY L/R EXCEPT FOR DCP130C			
1-11	LG6701001	1	CONTROL PANEL PCB ASSY, DCP130C EXCEPT FOR CHN		B53K860	
1-11	LG6701002	1	CONTROL PANEL PCB ASSY, DCP130C FOR CHN		B53K860	
1-11	LG6703001	1	CONTROL PANEL PCB ASSY, DCP330C/DCP540CN/DCP750CW		B53K861	
1-11	LG7027001	1	CONTROL PANEL PCB ASSY, FAX2480C EXCEPT FOR CHN		B53K889	
1-11	LG7027002	1	CONTROL PANEL PCB ASSY, FAX2480C FOR CHN		B53K889	ADD
1-11	LG6705001	1	CONTROL PANEL PCB ASSY, MFC240C EXCEPT FOR CHN		B53K862	
1-11	LG6705002	1	CONTROL PANEL PCB ASSY, MFC230C/MFC240C FOR CHN		B53K862	
1-11	LG6854001	1	CONTROL PANEL PCB ASSY, MFC440CN		B53K883	
1-11	LG6854002	1	CONTROL PANEL PCB ASSY, MFC660CN/MFC665CW/MFC845CW		B53K883	
1-12	LG6092001	1	LCD, DCP130C/FAX2480C/MFC240C EXCEPT FOR CHN			
1-12	LG6440001	1	LCD, DCP130C/FAX2480C/MFC230C/MFC240C FOR CHN			
1-13	LP1375005	1	LCD UNIT ASSY, DCP330C/DCP540CN EXCEPT FOR CHN			
1-13	LP3046005	1	LCD UNIT ASSY, DCP330C/DCP540CN/MFC440CN FOR CHN			
1-13	LP1644005	1	LCD UNIT ASSY, DCP750CW			
1-13	LP3063001	1	LCD UNIT ASSY, MFC440CN EXCEPT FOR CHN			
1-13	LP1566001	1	LCD UNIT ASSY, MFC660CN			
1-13	LP3089005	1	LCD UNIT ASSY, MFC665CW FOR CHN			
1-13	LP3562001	1	LCD UNIT ASSY, MFC665CW FOR ASA/OCE			
1-13	LP1884001	1	LCD UNIT ASSY, MFC845CW			
1-14	LP1382003	1	PANEL LOWER COVER, DCP330C/DCP540CN			
1-14	LP1382007	1	PANEL LOWER COVER, DCP750CW			
1-14	LP1568003	1	PANEL LOWER COVER, MFC440CN/MFC660CN/MFC665CW			
1-14	LP1568007	1	PANEL LOWER COVER, MFC845CW			
1-15	LP1563005	1	PRINTED RUBBER KEY MC, MFC660CN/MFC665CW/MFC845CW			
1-16	LP3077005	1	PRINTED RUBBER KEY FUNCTION, FAX2480C			
1-17	LP3079005	2	PRINTED RUBBER KEY TEN, FAX2480C			
1-18	LP3081005	3	PRINTED RUBBER KEY MODE, FAX2480C			
1-19	UF6916001	1	MIC COVER, MFC660CN/MFC665CW/MFC845CW			
2	087311016	3	TAPTITE CUP B M3X10			

www.dukparts.pl

9 PCB

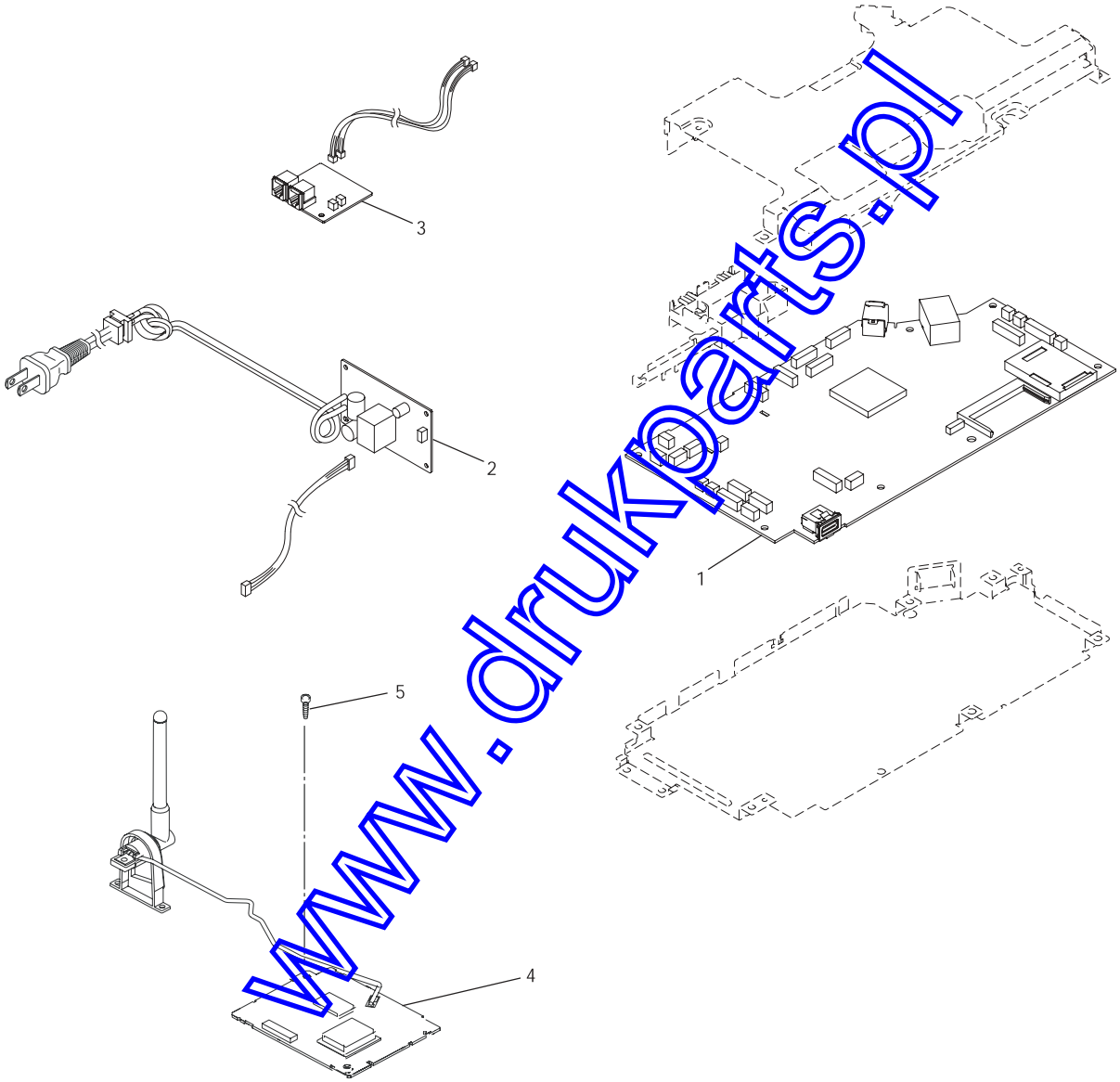

www.drukparts.pl

List9(PCB)

REF No.	CODE	Q'TY	DESCRIPTION	RECOMMEND	SYMBOL	REMARKS
1	LG6812001	1	MAIN PCB ASSY, DCP130C EXCEPT FOR CHN	√	B53K881	
1	LG6812005	1	MAIN PCB ASSY, DCP130C FOR CHN	√	B53K881	
1	LG6812002	1	MAIN PCB ASSY, DCP130C FOR US (*)	√	B53K881	
1	LG6821001	1	MAIN PCB ASSY, DCP330C EXCEPT FOR CHN	√	B53K867	
1	LG6821005	1	MAIN PCB ASSY, DCP330C FOR CHN	√	B53K867	
1	LG6822011	1	MAIN PCB ASSY, DCP540CN EXCEPT FOR CHN	√	B53K867	
1	LG6822015	1	MAIN PCB ASSY, DCP540CN FOR CHN	√	B53K867	
1	LG6857003	1	MAIN PCB ASSY, DCP750CW	√	B53K880	
1	LG6862051	1	MAIN PCB ASSY, FAX2480C EXCEPT FOR CHN	√	B53K880	
1	LG6862055	1	MAIN PCB ASSY, FAX2480C FOR CHN	√	B53K880	add
1	LG6862052	1	MAIN PCB ASSY, FAX2480C FOR US (*)	√	B53K880	
1	LG6862056	1	MAIN PCB ASSY, FAX2580C	√	B53K880	
1	LG7342041	1	MAIN PCB ASSY, MFC230C FOR US/CAN	√	B53K881	
1	LG7342042	1	MAIN PCB ASSY, MFC230C FOR US(*)	√	B53K881	
1	LG6813011	1	MAIN PCB ASSY, MFC240C/MFC240CE EXCEPT FOR CHN/ZAF	√	B53K881	
1	LG7342045	1	MAIN PCB ASSY, MFC230C FOR CHN	√	B53K881	
1	LG6813015	1	MAIN PCB ASSY, MFC240C FOR CHN	√	B53K881	
1	LG6813017	1	MAIN PCB ASSY, MFC240C FOR ZAF	√	B53K881	ADD
1	LG6813012	1	MAIN PCB ASSY, MFC240C FOR US (*)	√	B53K881	
1	LG6858011	1	MAIN PCB ASSY, MFC440CN FOR US/CAN	√	B53K880	
1	LG6858013	1	MAIN PCB ASSY, MFC440CN EXCEPT FOR US/CAN/CHN	√	B53K880	
1	LG6858015	1	MAIN PCB ASSY, MFC440CN FOR CHN	√	B53K880	
1	LG6859023	1	MAIN PCB ASSY, MFC660CN EXCEPT FOR ZAF	√	B53K880	
1	LG6859021	1	MAIN PCB ASSY, MFC665CW/MFC665CWE FOR US/CAN	√	B53K880	
1	LG6859025	1	MAIN PCB ASSY, MFC665CW FOR CHN	√	B53K880	
1	LG6859026	1	MAIN PCB ASSY, MFC665CW FOR ASA/OCE	√	B53K880	
1	LG6859027	1	MAIN PCB ASSY, MFC660CN FOR ZAF	√	B53K880	ADD
1	LG6860031	1	MAIN PCB ASSY, MFC845CW FOR US	√	B53K880	
1	LG6860033	1	MAIN PCB ASSY, MFC845CW EXCEPT FOR US	√	B53K880	add
2	LG6727001	1	POWER SUPPLY PCB ASSY (INCLUDING AC CORD) FOR US/CAN	√		
2	LG7207001	1	POWER SUPPLY PCB ASSY (INCLUDING AC CORD) FOR BRA	√		
2	LG6749001	1	POWER SUPPLY PCB ASSY (EXCLUDING AC CORD) FOR GER/UK/FRA/BEL/NLD/CHE/AUS/SPA/ITA/ISR/POR/ ZAF/RUS/GNR/OCE/PND/IBR/EEU	√		
2	LG7050001	1	POWER SUPPLY PCB ASSY (EXCLUDING AC POWER CORD) FOR CHN	√		
2	LG7048001	1	POWER SUPPLY PCB ASSY (EXCLUDING AC POWER CORD) FOR ARG/CHL/ASA	√		
3	LG6844001	1	MJ PCB ASSY, FAX2480C/FAX2580C/ MFC240C/MFC240CE/MFC440CN/ MFC665CW/MFC665CWE/MFC845CW FOR US/CAN/CHN/ARG/CHL/ASA/OCE		B53K887	
3	LG6844004	1	MJ PCB ASSY, MFC240C/MFC440CN/MFC660CN/MFC845CW FOR GER/UK/FRA/BEL/NLD/CHE/AUS/SPA/ITA/ISR/POR/RUS/ GNR/PND/EEU		B53K887	
3	LG6844063	1	MJ PCB ASSY, MFC240C/MFC660CN/MFC845CW FOR ZAF		B53K887	
3	LT0036001	1	MJ PCB ASSY, MFC230C FOR US/CAN/CHN		B53K948	
4	LG6964001	1	CORDLESS PCB ASSY (INCLUDING ANTENNA), FAX2580C/MFC845CW		B53K890	
4	LG7127001	1	CORDLESS PCB ASSY (INCLUDING ANTENNA), MFC845CW FOR GER/UK/FRA/BEL/NLD/CHE/SPA/ITA/POR/ZAF/PND		B53K899	
5	LF8234001	1	TAPTITE TORX PAN B M3X10, FAX2580C/MFC845CW			

*: First 3 months production only

www.drukparts.pl

10 ACCESSORIES

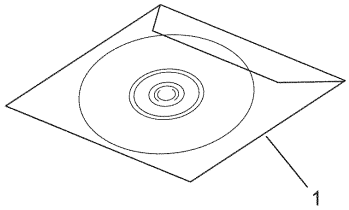

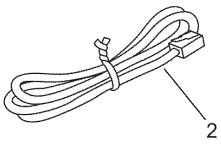

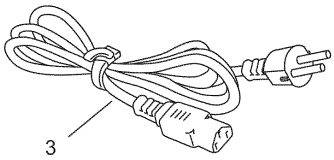

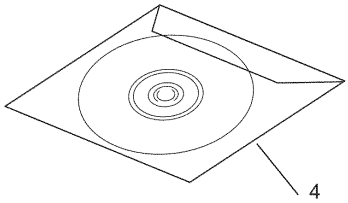

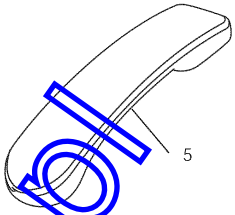

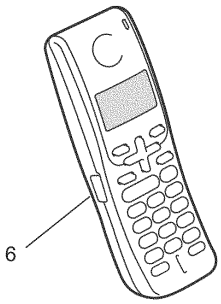

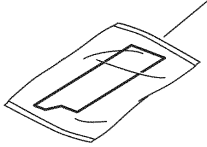

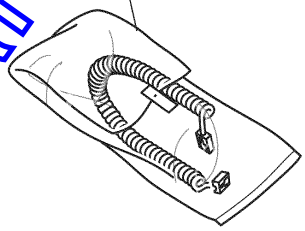

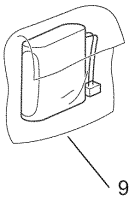

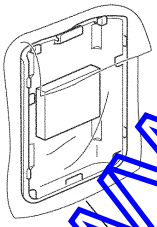

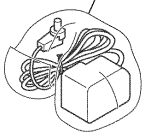

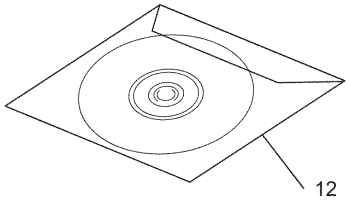

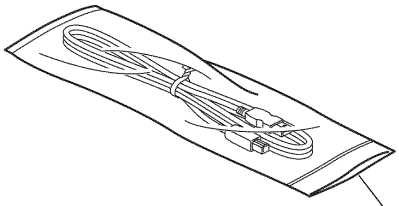

www.drukparts.pl

List10(ACCESSORIES US)

REF No.	CODE	Q'TY	DESCRIPTION	RECOMMEND	REMARKS
1	LP3027001	1	CD-ROM ASSY, DCP130C FOR US/CAN		
1	LP3103001	1	CD-ROM ASSY, DCP130C FOR BRA		
1	LP3028001	1	CD-ROM ASSY, DCP330C FOR US/CAN		
1	LP3029001	1	CD-ROM ASSY, DCP540CN FOR US/CAN		
1	LS2064001	1	CD-ROM ASSY, MFC230C FOR US/CAN		
1	LP3030001	1	CD-ROM ASSY, MFC240C/MFC240CE FOR US/CAN		
1	LP3145001	1	CD-ROM ASSY, MFC240C FOR ARG/CHL		
1	LP6247001	1	CD-ROM ASSY ARCSOFT, MFC240CE/MFC665CWE FOR US		
1	LP3031001	1	CD-ROM ASSY, MFC440CN FOR US/CAN		
1	LP3032001	1	CD-ROM ASSY, MFC665CW/MFC665CWE FOR US/CAN		
1	LP3033001	1	CD-ROM ASSY, MFC845CW FOR US		
2	LG3077001	1	TELEPHONE LINE CORD, FAX2480C/FAX2580C/ MFC230C/MFC240C/MFC240CE/MFC440CN/MFC665CW/MFC665CWE/ MFC845CW FOR US/CAN/ARG/CHL		
3	LG6427001	1	AC POWER CORD BAG ASSY FOR ARG		
3	LG6426001	1	AC POWER CORD BAG ASSY FOR CHL		
4	----		NOT USED		
5	LE5803016	1	HAND SET WEIGHT ASSY, FAX2480C		
5	LE5803018	1	HAND SET WEIGHT ASSY, MFC665CW/MFC665CWE		
6	LS2024001	1	CORDLESS TELEPHONE ASSY(SP), MFC845CW/FAX2580C		chg
7	LP1569005	1	SIDE COVER ASSY, FAX2480C/FAX2580C/MFC665CW/MFC665CWE		
8	UL8019005	1	HANDSET CURLED CORD ASSY, FAX2480C/ MFC665CW/MFC665CWE		
9	LG6944001	1	BATTERY BAG ASSY, MFC845CW/FAX2580C		
10	LP1863001	1	BATTERY COVER ASSY, MFC845CW/FAX2580C		
11	LG6960001	1	AC ADAPTER, MFC845CW/FAX2580C		
12	LS2029001	1	CD-ROM ASSY VISTA , MFC845CW FOR US		add
12	LS2489001	1	CD-ROM ASSY VISTA , DCP130C/MFC240C/MFC240CE/ MFC440CN/MFC665CW/MFC665CWE FOR US/CAN/BRA		ADD
13	---		NOT USED		

www.drukparts.pl

REF No.	CODE	Q'TY	DESCRIPTION	RECOMMEND	REMARKS
1	LP3102001	1	CD-ROM ASSY, DCP130C FOR GER/UK/CHE/AUS/ZAF/ASA/OCE		
1	LP3120001	1	CD-ROM ASSY, DCP330C FOR GER/UK/CHE/AUS/ZAF/ASA/OCE		
1	LP3135001	1	CD-ROM ASSY, DCP540CN FOR GER/UK/CHE/AUS/ZAF/ASA/OCE		
1	LP3140001	1	CD-ROM ASSY, DCP750CW FOR GER/UK/CHE		
1	LP3144001	1	CD-ROM ASSY, MFC240C FOR GER/UK/FRA/CHE/AUS/ZAF/ASA/OCE		
1	LP3153001	1	CD-ROM ASSY, MFC440CN FOR GER/UK/FRA/CHE/AUS/ASA/OCE		
1	LP3158001	1	CD-ROM ASSY, MFC660CN FOR GER/UK/FRA/CHE/AUS/ZAF		
1	LP3162001	1	CD-ROM ASSY, MFC665CW FOR ASA/OCE		
1	LP3163001	1	CD-ROM ASSY, MFC845CW FOR GER/UK/FRA/CHE/ZAF		
1	LP3104001	1	CD-ROM ASSY, DCP130C FOR FRA/PND		
1	LP3122001	1	CD-ROM ASSY, DCP330C FOR FRA/PND		
1	LP3137001	1	CD-ROM ASSY, DCP540CN FOR FRA/PND		
1	LP3142001	1	CD-ROM ASSY, DCP750CW FOR FRA/PND		
1	LP3146001	1	CD-ROM ASSY, MFC240C FOR BEL/NLD/PND		
1	LP3155001	1	CD-ROM ASSY, MFC440CN FOR BEL/NLD/GNR/PND		
1	LP3160001	1	CD-ROM ASSY, MFC660CN FOR BEL/NLD		
1	LP3165001	1	CD-ROM ASSY, MFC845CW FOR BEL/NLD/PND		
1	LP3145001	1	CD-ROM ASSY, MFC240C FOR CHE/SPA/ITA/POR		chg
1	LP3154001	1	CD-ROM ASSY, MFC440CN FOR SPA/ITA/POR		
1	LP3159001	1	CD-ROM ASSY, MFC660CN FOR SPA/ITA/POR		
1	LP3164001	1	CD-ROM ASSY, MFC845CW FOR SPA/ITA/POR		
1	LP3103001	1	CD-ROM ASSY, DCP130C FOR CHE/ITA/IBR		chg
1	LP3121001	1	CD-ROM ASSY, DCP330C FOR ITA/IBR		
1	LP3136001	1	CD-ROM ASSY, DCP540CN FOR ITA/IBR		
1	LP3141001	1	CD-ROM ASSY, DCP750CW FOR ITA/IBR		
1	LP3180001	1	CD-ROM ASSY, DCP130C FOR CHN		
1	LP3181001	1	CD-ROM ASSY, DCP330C FOR CHN		
1	LP3182001	1	CD-ROM ASSY, DCP540CN FOR CHN		
1	LS2126001	1	CD-ROM ASSY, MFC230C FOR CHN		
1	LP3183001	1	CD-ROM ASSY, MFC240C FOR CHN		
1	LP3184001	1	CD-ROM ASSY, MFC440CN FOR CHN		
1	LP3185001	1	CD-ROM ASSY, MFC665CW FOR CHN		
1	LP3175001	1	CD-ROM ASSY, DCP130C FOR RUS		
1	LP3176001	1	CD-ROM ASSY, DCP330C FOR RUS		
1	LP3177001	1	CD-ROM ASSY, DCP540CN FOR RUS		
1	LP3178001	1	CD-ROM ASSY, MFC240C FOR RUS		
1	LP3106001	1	CD-ROM ASSY, DCP130C FOR ISR/EEU		
1	LP3124001	1	CD-ROM ASSY, DCP330C FOR EEU		
1	LP3139001	1	CD-ROM ASSY, DCP540CN FOR EEU		
1	LP3148001	1	CD-ROM ASSY, MFC240C FOR ISR/EEU		
2	UG3625001	1	TELEPHONE LINE CORD, MFC240C/MFC440CN/MFC660CN/MFC845CW FOR GER		
2	UG3626001	1	TELEPHONE LINE CORD, MFC240C/MFC440CN/MFC660CN/MFC845CW FOR UK		
2	LG3077001	1	TELEPHONE LINE CORD, FAX2480C/MFC230C/MFC240C/MFC440CN/MFC660CN/MFC665CW/MFC845CW		
2	UG3627001	1	TELEPHONE LINE CORD, MFC240C/MFC440CN/MFC660CN/MFC845CW FOR FRA		
2	UG4205001	1	TELEPHONE LINE CORD, MFC240C/MFC440CN/MFC660CN FOR AUS		
2	UG1575001	1	TELEPHONE LINE CORD, MFC240C/MFC440CN/MFC660CN/MFC845CW FOR BEL		
2	LG7202001	1	TELEPHONE LINE CORD, MFC240C/MFC440CN/MFC660CN/MFC845CW FOR CHE		
2	UG3634001	1	TELEPHONE LINE CORD, MFC240C/MFC440CN/MFC660CN/MFC845CW FOR ITA		
2	LG5827001	1	TELEPHONE LINE CORD, MFC240C/MFC440CN/MFC845CW FOR PND		
3	LG5717001	1	AC CORD BAG ASSY LF VDE FOR GER/FRA/BEL/NLD/AUS/SPA/ITA/POR/ASA/RUS/GNR/PND/IBR/EEU		
3	LG5692001	1	AC CORD BAG ASSY FOR UK/ASA		
3	LG5732001	1	AC CORD BAG ASSY FOR CHE		
3	LG7005001	1	AC CORD BAG ASSY FOR ISR		
3	LG5735001	1	AC CORD BAG ASSY FOR CHN		
3	LG6404001	1	AC POWER CORD BAG ASSY FOR ZAF		

www.drukparts.pl

List10(ACCESSORIES EU)

REF No.	CODE	Q'TY	DESCRIPTION	RECOMMEND	REMARKS
3	LG5734001	1	AC CORD BAG ASSY FOR OCE		
3	LG5736001	1	AC CORD BAG ASSY LF DEMKO FOR PND		
4	LP0369001	1	CD-ROM ASSY WEB TRANSLATOR 5.0 FOR GER/UK/FRA/BEL/NLD/CHE/AUS/SPA/ITA/ISR/POR/ZAF/RUS/GNR PND/IBR/FFU		
5	LF1518016	1	HANDSET WEIGHT ASSY, FAX2480C		chg
5	LF1518018	1	HANDSET WEIGHT ASSY, MFC660CN/MFC665CW		
~~5~~	~~LE5803018~~	~~1~~	~~HANDSET WEIGHT ASSY, MFC665CW~~		del
6	LP5921001	1	CORDLESS TELEPHONE ASSY(SP), MFC845CW		chg
7	LP1569005	1	SIDE COVER ASSY, FAX2480C/MFC660CN/MFC665CW		
8	UL8019005	1	HANDSET CURLED CORD ASSY, FAX2480C/MFC660CN/MFC665CW		
9	LG7128001	1	BATTERY BAG ASSY, MFC845CW		chg
10	LP1863001	1	BATTERY COVER ASSY, MFC845CW		
11	LT0271001	1	AC ADAPTER, MFC845CW FOR GER/FRA/BEL/NLD/CHE/SPA/ITA/POR/PND		CHG
11	LT0272001	1	AC ADAPTER, MFC845CW FOR UK		CHG
11	LG7309001	1	AC ADAPTER, MFC845CW FOR ZAF		
12	LS2029001	1	CD-ROM ASSY VISTA , DCP130C/MFC240C/MFC440CN/MFC665CW FOR ASA/OCE		add
12	LS2030001	1	CD-ROM ASSY VISTA , DCP130C/DCP330C/DCP540CN/MFC240C/MFC440CN/ FOR CHN, DCP330C/DCP540CN FOR ASA/OCE		add
12	LS2486001	1	CD-ROM ASSY VISTA, MFC665CW FOR CHN		add
13	LP0001001	1	USB CABLE 2.0 ASSY, DCP130C/DCP330C/DCP540CN/MFC240C/ MFC440CN/MFC665CW FOR CHN		add

www.drukparts.pl

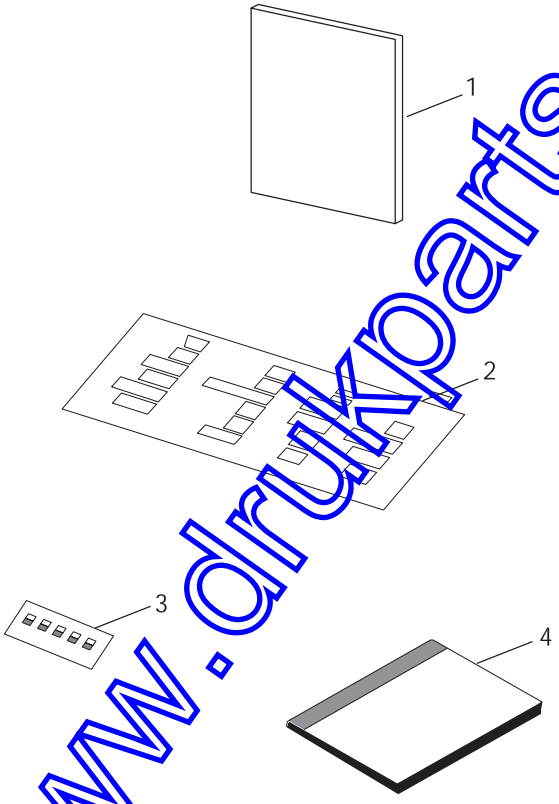

www.drukparts.pl

List11(PRINTED MATERIALS US)

REF No.	CODE	Q'TY	DESCRIPTION	RECOMMEND	REMARKS
1	LP3012001	1	USER'S GUIDE, DCP130C FOR US/CAN <ENGLISH>		
1	LP3275018	1	USER'S GUIDE, DCP130C FOR BRA		
1	LP3289001	1	USER'S GUIDE, DCP330C/DCP540CN FOR US/CAN <ENGLISH>		
~~1~~	~~LP3291001~~	~~1~~	~~USER'S GUIDE, FAX2480C FOR US/CAN <ENGLISH>~~		del
1	LP5665001	1	USER'S GUIDE, FAX2480C FOR US/CAN, FAX2580C FOR US		chg
1	LS2066001	1	USER'S GUIDE, MFC230C FOR US/CAN <ENGLISH>		
1	LS2066002	1	USER'S GUIDE, MFC230C FOR CAN <FRENCH>		
1	LP3215001	1	USER'S GUIDE, MFC240C/MFC240CE FOR US/CAN <ENGLISH>		
1	LP3412015	1	USER'S GUIDE, MFC240C FOR ARG/CHL		
~~1~~	~~LP3290001~~	~~1~~	~~USER'S GUIDE, MFC440CN/MFC665CW FOR US/CAN <ENGLISH>~~		del
1	LP5196001	1	USER'S GUIDE, MFC440CN/MFC665CW/MFC665CWE/MFC845CW FOR US/CAN <ENGLISH>		
1	LP3012002	1	USER'S GUIDE, DCP130C FOR CAN <FRENCH>		
1	LP3289002	1	USER'S GUIDE, DCP330C/DCP540CN FOR CAN <FRENCH>		
1	LP3291002	1	USER'S GUIDE, FAX2480C FOR CAN <FRENCH>		
1	LP3215002	1	USER'S GUIDE, MFC240C FOR CAN <FRENCH>		
1	LP3290002	1	USER'S GUIDE, MFC440CN/MFC665CW FOR CAN <FRENCH>		
2	LP3021001	1	FRENCH SEAL, DCP130C FOR CAN		
2	LP3937001	1	FRENCH SEAL, DCP330C FOR CAN		
2	LP3947001	1	FRENCH SEAL, DCP540CN FOR CAN		
2	LP3713001	1	FRENCH SEAL, FAX2480C FOR CAN		
2	LS2074001	1	FRENCH SEAL, MFC230C FOR CAN		
2	LP3220001	1	FRENCH SEAL, MFC240C FOR CAN		
2	LP3676001	1	FRENCH SEAL, MFC440CN FOR CAN		
2	LP3990001	1	FRENCH SEAL, MFC665CW FOR CAN		
3	LP3706001	1	ADDRESS LABEL, FAX2480C FOR US/CAN		
3	LP5341001	1	ADDRESS LABEL, FAX2580C FOR US		
4	LS2932001	1	USER'S GUIDE D-CL, MFC845CW/FAX2580C FOR US		CHG

www.drukparts.pl

List11(PRINTED MATERIALS EU)

REF No.	CODE	Q'TY	DESCRIPTION	RECOMMEND	REMARKS
1	LP3275003	1	USER'S GUIDE, DCP130C FOR GER/CHE/AUS		
~~1~~	~~LP3294003~~	~~1~~	~~USER'S GUIDE, DCP330C/DCP540CN FOR GER/CHE/AUS~~		del
1	LP3685003	1	USER'S GUIDE, DCP330C/DCP540CN/DCP750CW FOR GER/CHE/AUS		chg
1	LP3412003	1	USER'S GUIDE, MFC240C FOR GER/AUS		
~~1~~	~~LP5667003~~	~~1~~	~~USER'S GUIDE, MFC440CN/MFC660CN FOR GER/AUS~~		del
1	LP5833003	1	USER'S GUIDE, MFC440CN/MFC660CN/MFC845CW FOR GER/AUS		chg
1	LP3275004	1	USER'S GUIDE, DCP130C FOR UK/ZAF		
~~1~~	~~LP3294004~~	~~1~~	~~USER'S GUIDE, DCP330C/DCP540CN FOR UK/ZAF~~		del
1	LP3685004	1	USER'S GUIDE, DCP330C/DCP540CN/DCP750CW FOR UK/ZAF		chg
1	LP3412004	1	USER'S GUIDE, MFC240C FOR UK/ZAF		
~~1~~	~~LP5667004~~	~~1~~	~~USER'S GUIDE, MFC440CN/MFC660CN FOR UK/ZAF/GNR~~		del
1	LP5833004	1	USER'S GUIDE, MFC440CN/MFC660CN/MFC845CW FOR UK/ZAF/GNR		chg
1	LP3275005	1	USER'S GUIDE, DCP130C FOR FRA/CHE <FRENCH>		
1	LP3275009	1	USER'S GUIDE, DCP130C FOR FRA <DUTCH>		
~~1~~	~~LP3294005~~	~~1~~	~~USER'S GUIDE, DCP330C/DCP540CN FOR FRA/CHE <FRENCH>~~		del
~~1~~	~~LP3294009~~	~~1~~	~~USER'S GUIDE, DCP330C/DCP540CN FOR FRA <DUTCH>~~		del
1	LP3685005	1	USER'S GUIDE, DCP330C/DCP540CN/DCP750CW FOR FRA/CHE <FRENCH>		chg
1	LP3685009	1	USER'S GUIDE, DCP330C/DCP540CN/DCP750CW FOR FRA <DUTCH>		chg
1	LP3412005	1	USER'S GUIDE, MFC240C FOR FRA		
~~1~~	~~LP5667005~~	~~1~~	~~USER'S GUIDE, MFC440CN/MFC660CN FOR FRA~~		del
1	LP5833005	1	USER'S GUIDE, MFC440CN/MFC660CN /MFC845CW FOR FRA		chg
1	LP3412008	1	USER'S GUIDE, MFC240C FOR BEL <DUTCH>		
1	LP3412058	1	USER'S GUIDE, MFC240C FOR BEL/CHE <FRENCH>		
~~1~~	~~LP5667008~~	~~1~~	~~USER'S GUIDE, MFC440CN/MFC660CN FOR BEL <DUTCH>~~		del
~~1~~	~~LP5667058~~	~~1~~	~~USER'S GUIDE, MFC440CN/MFC660CN FOR BEL/CHE <FRENCH>~~		del
1	LP5833008	1	USER'S GUIDE, MFC440CN/MFC660CN/MFC845CW FOR BEL <DUTCH>		chg
1	LP5833058	1	USER'S GUIDE, MFC440CN/MFC660CN/MFC845CW FOR BEL/CHE		chg
1	LP3412009	1	USER'S GUIDE, MFC240C FOR NLD		
~~1~~	~~LP5940009~~	~~1~~	~~USER'S GUIDE, MFC440CN/MFC660CN FOR NLD~~		del
1	LP5833009	1	USER'S GUIDE, MFC440CN/MFC660CN/MFC845CW FOR NLD		chg
1	LP3412010	1	USER'S GUIDE, MFC240C FOR CHE		
~~1~~	~~LP5667010~~	~~1~~	~~USER'S GUIDE, MFC440CN/MFC660CN FOR CHE~~		del
1	LP5833010	1	USER'S GUIDE, MFC440CN/MFC660CN/MFC845CW FOR CHE		chg
1	LP3412015	1	USER'S GUIDE, MFC240C FOR SPA		
~~1~~	~~LP5940015~~	~~1~~	~~USER'S GUIDE, MFC440CN/MFC660CN FOR SPA~~		del
1	LP5833015	1	USER'S GUIDE, MFC440CN/MFC660CN/MFC845CW FOR SPA		chg
1	LP3275016	1	USER'S GUIDE, DCP130C FOR ITA		
~~1~~	~~LP3294016~~	~~1~~	~~USER'S GUIDE, DCP330C/DCP540CN FOR ITA~~		del
1	LP3685016	1	USER'S GUIDE, DCP330C/DCP540CN/DCP750CW FOR ITA		chg
1	LP3412016	1	USER'S GUIDE, MFC240C FOR ITA		
~~1~~	~~LP5667016~~	~~1~~	~~USER'S GUIDE, MFC440CN/MFC660CN FOR ITA~~		del
1	LP5833016	1	USER'S GUIDE, MFC440CN/MFC660CN /MFC845CW FOR ITA		chg
1	LP3412018	1	USER'S GUIDE, MFC240C FOR POR		
~~1~~	~~LP5940018~~	~~1~~	~~USER'S GUIDE, MFC440CN/MFC660CN FOR POR~~		del
1	LP5833018	1	USER'S GUIDE, MFC440CN/MFC660CN/MFC845CW FOR POR		chg
1	LP3275020	1	USER'S GUIDE, DCP130C FOR CHN		
1	LP3294020	1	USER'S GUIDE, DCP330C/DCP540CN FOR CHN		
1	LP5695020	1	USER'S GUIDE, FAX2480C FOR CHN		
1	LS2969020	1	USER'S GUIDE, MFC230C FOR CHN		
1	LP3412020	1	USER'S GUIDE, MFC240C FOR CHN		
1	LP5392020	1	USER'S GUIDE, MFC440CN/MFC665CW FOR CHN		
1	LP3275040	1	USER'S GUIDE, DCP130C FOR ASA/OCE		
1	LP3294040	1	USER'S GUIDE, DCP330C/DCP540CN FOR ASA/OCE		
1	LP5695040	1	USER'S GUIDE, FAX2480C FOR ASA/OCE		
1	LP3412040	1	USER'S GUIDE, MFC240C FOR ASA/OCE		
1	LP5392040	1	USER'S GUIDE, MFC440CN/MFC665CW FOR ASA/OCE		
1	LP3275048	1	USER'S GUIDE, DCP130C FOR RUS		
1	LP3412048	1	USER'S GUIDE, MFC240C FOR RUS		
1	LP3294048	1	USER'S GUIDE, DCP330C/DCP540CN FOR RUS		
1	LP3895007	1	USER'S GUIDE, DCP130C FOR PND <NORWEGIAN/SWEDISH>		
1	LP3896013	1	USER'S GUIDE, DCP130C FOR PND <FINNISH/DANISH>		
~~1~~	~~LP3897007~~	~~1~~	~~USER'S GUIDE, DCP330C/DCP540CN FOR PND <NORWEGIAN/SWEDISH>~~		del
~~1~~	~~LP3898013~~	~~1~~	~~USER'S GUIDE, DCP330C/DCP540CN FOR PND <FINNISH/DANISH>~~		del
1	LP5211007	1	USER'S GUIDE, DCP330C/DCP540CN/DCP750CW FOR PND <NORWEGIAN/SWEDISH>		chg
1	LP5212013	1	USER'S GUIDE, DCP330C/DCP540CN/DCP750CW FOR PND <FINNISH/DANISH>		chg
1	LP5066007	1	USER'S GUIDE, MFC240C FOR PND <NORWEGIAN/SWEDISH>		
1	LP5067013	1	USER'S GUIDE, MFC240C FOR PND <FINNISH/DANISH>		
~~1~~	~~LP5364007~~	~~1~~	~~USER'S GUIDE, MFC440CN FOR PND <NORWEGIAN/SWEDISH>~~		del
~~1~~	~~LP5365013~~	~~1~~	~~USER'S GUIDE, MFC440CN FOR PND <FINNISH/DANISH>~~		del
1	LP5876007	1	USER'S GUIDE, MFC440CN/MFC845CW FOR PND <NORWEGIAN/SWEDISH>		chg

www.dukparts.pl

List11(PRINTED MATERIALS EU)

REF No.	CODE	Q'TY	DESCRIPTION	RECOMMEND	REMARKS
1	LP5877013	1	USER'S GUIDE, MFC440CN/MFC845CW FOR PND <FINNISH/DANISH>		chg
1	LP3275015	1	USER'S GUIDE, DCP130C FOR IBR <SPANISH>		
1	LP3275018	1	USER'S GUIDE, DCP130C FOR IBR <PORTUGUESE>		
~~1~~	~~LP3294015~~	~~1~~	~~USER'S GUIDE, DCP330C/DCP540CN FOR IBR <SPANISH>~~		del
~~1~~	~~LP3294018~~	~~1~~	~~USER'S GUIDE, DCP330C/DCP540CN FOR IBR <PORTUGUESE>~~		del
1	LP3685015	1	USER'S GUIDE, DCP330C/DCP540CN/DCP750CW FOR IBR <SPANISH>		chg
1	LP3685018	1	USER'S GUIDE, DCP330C/DCP540CN/DCP750CW FOR IBR <PORTUGUESE>		chg
2	----		NOT USED		
3	LP3706001	1	ADDRESS LABEL, FAX2480C		
4	LS4395003	1	USER'S GUIDE D-CL, MFC845CW FOR GER/CHE		CHG
4	LS4395004	1	USER'S GUIDE D-CL, MFC845CW FOR UK/ZAF		CHG
4	LS4395005	1	USER'S GUIDE D-CL, MFC845CW FOR FRA/BEL/CHE <FRENCH>		CHG
4	LS4395009	1	USER'S GUIDE D-CL, MFC845CW FOR BEL/NLD <DUTCH>		CHG
4	LS4395015	1	USER'S GUIDE D-CL, MFC845CW FOR SPA		CHG
4	LS4395016	1	USER'S GUIDE D-CL, MFC845CW FOR ITA		CHG
4	LS4395018	1	USER'S GUIDE D-CL, MFC845CW FOR POR		CHG
4	LS4865007	1	USER'S GUIDE D-CL, MFC845CW FOR PND <NORWEGIAN/SWEDISH>		CHG
4	LS4865013	1	USER'S GUIDE D-CL, MFC845CW FOR PND <FINNISH/DANISH>		CHG

www.drukparts.pl

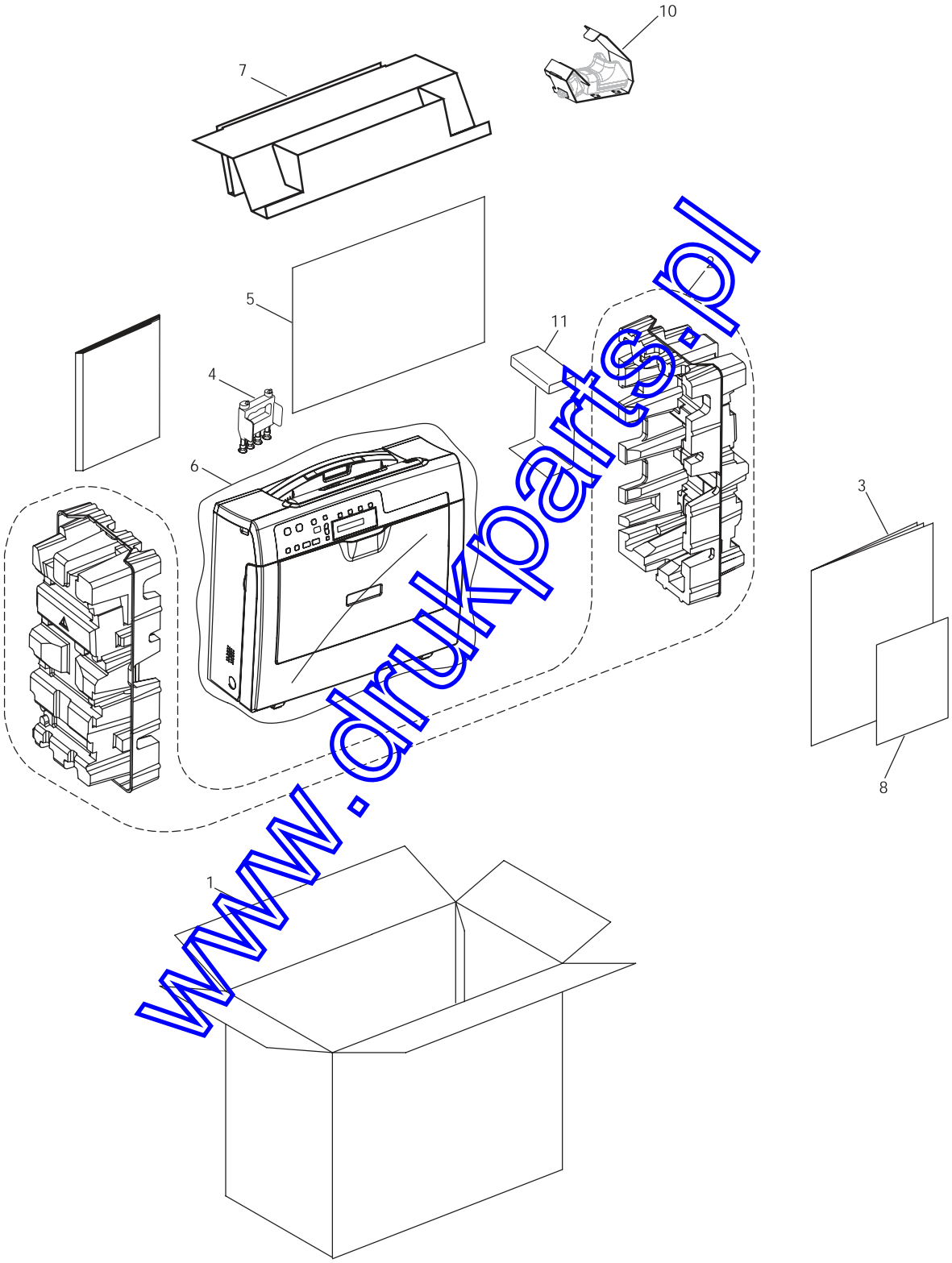

www.drukparts.pl

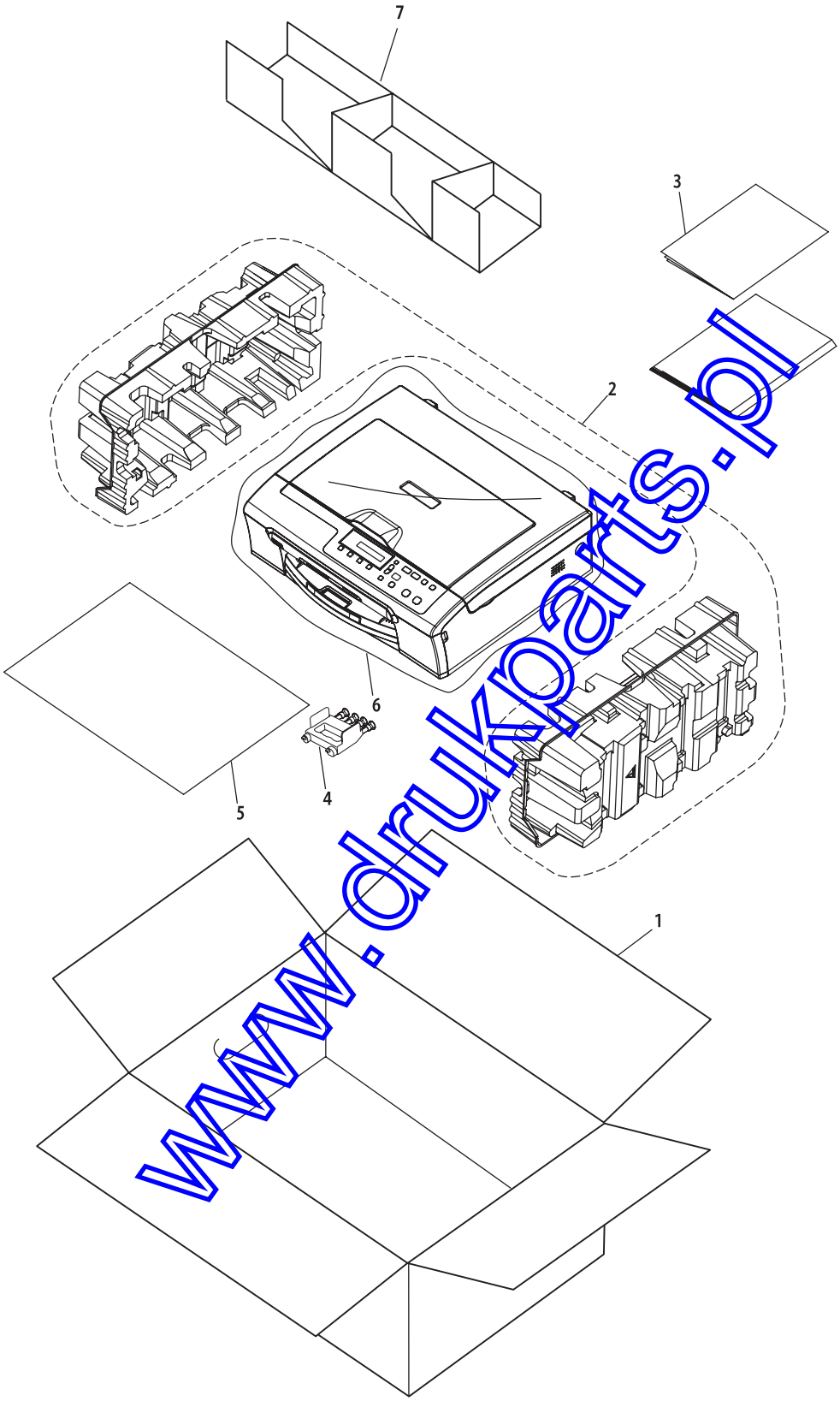

www.drukparts.pl

List12(PACKAGING US)

REF No.	CODE	Q'TY	DESCRIPTION	RECOMMEND	REMARKS
1	LP3014001	1	CARTON BROTHER, DCP130C FOR US/BRA	√	
1	LP3934001	1	CARTON BROTHER, DCP330C FOR US	√	
1	LP3943001	1	CARTON BROTHER, DCP540CN FOR US	√	
1	LP3707001	1	CARTON BROTHER, FAX2480C FOR US	√	
1	LP5340001	1	CARTON BROTHER, FAX2580C FOR US	√	
1	LS2068001	1	CARTON BROTHER, MFC230C FOR US	√	
1	LP3213001	1	CARTON BROTHER, MFC240C FOR US	√	
1	LP6253001	1	CARTON BROTHER, MFC240CE FOR US	√	
1	LP3669001	1	CARTON BROTHER, MFC440CN FOR US	√	
1	LP3985001	1	CARTON BROTHER, MFC665CW FOR US	√	
1	LS2323001	1	CARTON BROTHER, MFC665CWE FOR US	√	
1	LP5197001	1	CARTON BROTHER, MFC845CW FOR US	√	
1	LP3420001	1	CARTON BROTHER, DCP130C FOR CAN	√	
1	LP3940001	1	CARTON BROTHER, DCP330C FOR CAN	√	
1	LP3945001	1	CARTON BROTHER, DCP540CN FOR CAN	√	
1	LP3714001	1	CARTON BROTHER, FAX2480C FOR CAN	√	
1	LS2075001	1	CARTON BROTHER, MFC230C FOR CAN	√	
1	LP3419001	1	CARTON BROTHER, MFC240C FOR CAN	√	
1	LP3677001	1	CARTON BROTHER, MFC440CN FOR CAN	√	
1	LP3991001	1	CARTON BROTHER, MFC665CW FOR CAN	√	
1	LP3431001	1	CARTON BROTHER, MFC240C FOR ARG/CHL	√	
2	LP5220001	1	PULP CUSHION ASSY, DCP130C/DCP330C/MFC230C		chg
2	LP5221001	1	PULP CUSHION ASSY, DCP540CN/MFC240C/MFC240CE/MFC440CN		chg
~~2~~	~~LP1571001~~	~~1~~	~~PULP CUSHION ASSY, FAX2480C/MFC665CW~~		del
2	LP5778001	1	PULP CUSHION ASSY, FAX2480C/FAX2580C/MFC665CW/MFC665CWE/MFC845CW		chg
3	LP3015001	1	QUICK SETUP GUIDE, DCP130C FOR US/CAN <ENGLISH>		
3	LP3935001	1	QUICK SETUP GUIDE, DCP330C/DCP540CN FOR US/CAN <ENGLISH>		
~~3~~	~~LP3708001~~	~~1~~	~~QUICK SETUP GUIDE, FAX2480C FOR US/CAN <ENGLISH>~~		del
3	LP5666001	1	QUICK SETUP GUIDE, FAX2480C/FAX2580C FOR US/CAN <ENGLISH>		
3	LS2069001	1	QUICK SETUP GUIDE, MFC230C FOR US/CAN <ENGLISH>		
3	LP3216001	1	QUICK SETUP GUIDE, MFC240C/MFC240CE FOR US/CAN <ENGLISH>		
3	LP3670001	1	QUICK SETUP GUIDE, MFC440CN FOR US/CAN <ENGLISH>		
3	LP3988001	1	QUICK SETUP GUIDE, MFC665CW/MFC665CWE FOR US/CAN <ENGLISH>		
3	LP5198001	1	QUICK SETUP GUIDE, MFC845CW FOR US		
3	LP3015002	1	QUICK SETUP GUIDE, DCP130C FOR CAN <FRENCH>		
3	LP3935002	1	QUICK SETUP GUIDE, DCP330/DCP540CN FOR CAN <FRENCH>		
3	LS2069002	1	QUICK SETUP GUIDE, MFC230C FOR CAN <FRENCH>		
3	LP3708002	1	QUICK SETUP GUIDE, FAX2480C FOR CAN <FRENCH>		
3	LP3216002	1	QUICK SETUP GUIDE, MFC240C FOR CAN <FRENCH>		
3	LP3670002	1	QUICK SETUP GUIDE, MFC440CN FOR CAN <FRENCH>		
3	LP3988002	1	QUICK SETUP GUIDE, MFC665CW FOR CAN <FRENCH>		
3	LP3281018	1	QUICK SETUP GUIDE, DCP130C FOR BRA		
3	LP3415015	1	QUICK SETUP GUIDE, MFC240C FOR ARG/CHL		
4	LP3002001	1	PROTECT CARTRIDGE ASSY		
5	LS2119001	1	SHEET 420X450		CHG
6	LP3576001	1	PE BAG 620X800H 50P		
7	LP3055001	1	ACCESSORIES SHEET, FAX2480C/FAX2580C/MFC665CW/MFC665CWE/MFC845CW		
8	----		NOT USED		
(9)	----		NOT USED		
10	LP5577001	1	DL C-STAND HOLD SHEET, FAX2580C/MFC845CW		
11	LP5909001	1	PULP ASSIST PAD, FAX2580C/MFC845CW		add

www.dlparts.pl

REF No.	CODE	Q'TY	DESCRIPTION	RECOMMEND	REMARKS
1	LP3279001	1	CARTON BROTHER, DCP130C FOR GER/CHE/AUS	√	
1	LP3450001	1	CARTON BROTHER, DCP330C FOR GER/CHE/AUS	√	
1	LP3480001	1	CARTON BROTHER, DCP540CN FOR GER/CHE/AUS	√	
1	LP3686001	1	CARTON BROTHER, DCP750CW FOR GER/CHE	√	
1	LP3413001	1	CARTON BROTHER, MFC240C FOR GER/CHE/AUS	√	
1	LP5161001	1	CARTON BROTHER, MFC440CN FOR GER/CHE/AUS	√	
1	LP5007001	1	CARTON BROTHER, MFC660CN FOR GER/CHE/AUS	√	
1	LP5834001	1	CARTON BROTHER, MFC845CW FOR GER/CHE	√	
1	LP3302001	1	CARTON BROTHER, DCP130C FOR UK/ISR/ZAF/RUS/PND/EEU	√	
1	LP3462001	1	CARTON BROTHER, DCP330C FOR UK/ZAF/RUS/PND/EEU	√	
1	LP3483001	1	CARTON BROTHER, DCP540CN FOR UK/ZAF/RUS/PND/EEU	√	
1	LP3690001	1	CARTON BROTHER, DCP750CW FOR UK/PND	√	
1	LP3417001	1	CARTON BROTHER, MFC240C FOR UK/ISR/ZAF/RUS/PND/EEU	√	
1	LP5165001	1	CARTON BROTHER, MFC440CN FOR UK/GNR/PND	√	
1	LP5017001	1	CARTON BROTHER, MFC660CN FOR UK/ZAF	√	
1	LP5838001	1	CARTON BROTHER, MFC845CW FOR UK/ZAF/PAN	√	
1	LP3313001	1	CARTON BROTHER, DCP130C FOR FRA	√	
1	LP3460001	1	CARTON BROTHER, DCP330C FOR FRA	√	
1	LP3486001	1	CARTON BROTHER, DCP540CN FOR FRA	√	
1	LP3693001	1	CARTON BROTHER, DCP750CW FOR FRA	√	
1	LP3427001	1	CARTON BROTHER, MFC240C FOR FRA/BEL/NLD	√	
1	LP5170001	1	CARTON BROTHER, MFC440CN FOR FRA/BEL/NLD	√	
1	LP5014001	1	CARTON BROTHER, MFC660CN FOR FRA/BEL/NLD	√	
1	LP5844001	1	CARTON BROTHER, MFC845CW FOR FRA/BEL/NLD	√	
1	LP3319001	1	CARTON BROTHER, DCP130C FOR ITA/IBR	√	
1	LP3468001	1	CARTON BROTHER, DCP330C FOR ITA/IBR	√	
1	LP3489001	1	CARTON BROTHER, DCP540CN FOR ITA/IBR	√	
1	LP3697001	1	CARTON BROTHER, DCP750CW FOR ITA/IBR	√	
1	LP3431001	1	CARTON BROTHER, MFC240C FOR SPA/ITA/POR	√	
1	LP5175001	1	CARTON BROTHER, MFC440CN FOR SPA/ITA/POR	√	
1	LP5023001	1	CARTON BROTHER, MFC660CN FOR SPA/ITA/POR	√	
1	LP5859001	1	CARTON BROTHER, MFC845CW FOR SPA/ITA/POR	√	
1	LP5325001	1	CARTON BROTHER, DCP130C FOR CHN	√	
1	LP5331001	1	CARTON BROTHER, DCP330C FOR CHN	√	
1	LP5335001	1	CARTON BROTHER, DCP540CN FOR CHN	√	
1	LP5696001	1	CARTON BROTHER, FAX2480C FOR CHN	√	
1	LS4325001	1	CARTON BROTHER, MFC230C FOR CHN	√	
1	LP5207001	1	CARTON BROTHER, MFC240C FOR CHN	√	
1	LP5393001	1	CARTON BROTHER, MFC440CN FOR CHN	√	
1	LP5553001	1	CARTON BROTHER, MFC665CW FOR CHN	√	
1	LP3770001	1	CARTON BROTHER, DCP130C FOR ASA/OCE	√	
1	LP3804001	1	CARTON BROTHER, DCP330C FOR ASA/OCE	√	
1	LP3820001	1	CARTON BROTHER, DCP540CN FOR ASA/OCE	√	
1	LP5702001	1	CARTON BROTHER, FAX2480C FOR ASA/OCE	√	
1	LP5412001	1	CARTON BROTHER, MFC240C FOR ASA/OCE	√	
1	LP5400001	1	CARTON BROTHER, MFC440CN FOR ASA/OCE	√	
1	LP5559001	1	CARTON BROTHER, MFC665CW FOR ASA/OCE	√	
2	LP5772001	1	PULP CUSHION ASSY, DCP130C/DCP330C/DCP750CW/MFC230C		chg
2	LP5775001	1	PULP CUSHION ASSY, DCP540CN/MFC240C/MFC440CN		chg
2	LP5778001	1	PULP CUSHION ASSY, FAX2480C/MFC660CN/MFC665CW		chg
2	LP1874001	1	PULP CUSHION ASSY, MFC845CW		
3	LP3281003	1	QUICK SETUP GUIDE, DCP130C FOR GER/CHE/AUS		
3	LP3295003	1	QUICK SETUP GUIDE, DCP330C/DCP540CN FOR GER/CHE/AUS		
3	LP3688003	1	QUICK SETUP GUIDE, DCP750CW FOR GER/CHE		
3	LP3415003	1	QUICK SETUP GUIDE, MFC240C FOR GER/AUS		
3	LP5009003	1	QUICK SETUP GUIDE, MFC440CN/MFC660CN FOR GER/AUS		
3	LP5836003	1	QUICK SETUP GUIDE, MFC845CW FOR GER		
3	LP3281004	1	QUICK SETUP GUIDE, DCP130C FOR UK/ZAF		
3	LP3295004	1	QUICK SETUP GUIDE, DCP330C/DCP540CN FOR UK/ZAF		
3	LP3688004	1	QUICK SETUP GUIDE, DCP750CW FOR UK		
3	LP3415004	1	QUICK SETUP GUIDE, MFC240C FOR UK/ZAF		
3	LP5009004	1	QUICK SETUP GUIDE, MFC440CN/MFC660CN FOR UK/ZAF/GNR		
3	LP5836004	1	QUICK SETUP GUIDE, MFC845CW FOR UK/ZAF		
3	LP3281005	1	QUICK SETUP GUIDE, DCP130C FOR FRA/CHE <FRENCH>		
3	LP3281009	1	QUICK SETUP GUIDE, DCP130C FOR FRA <DUTCH>		
3	LP3295005	1	QUICK SETUP GUIDE, DCP330C/DCP540CN FOR FRA/CHE		
3	LP3295009	1	QUICK SETUP GUIDE, DCP330C/DCP540CN FOR FRA <DUTCH>		
3	LP3688005	1	QUICK SETUP GUIDE, DCP750CW FOR FRA/CHE <FRENCH>		
3	LP3688009	1	QUICK SETUP GUIDE, DCP750CW FOR FRA <DUTCH>		
3	LP3415005	1	QUICK SETUP GUIDE, MFC240C FOR FRA		
3	LP5009005	1	QUICK SETUP GUIDE, MFC440CN/MFC660CN FOR FRA		

www.dzkparts.pl

REF No.	CODE	Q'TY	DESCRIPTION	RECOMMEND	REMARKS
3	LP5836005	1	QUICK SETUP GUIDE, MFC845CW FOR FRA		
3	LP3415008	1	QUICK SETUP GUIDE, MFC240C FOR BEL <DUTCH>		
3	LP3415058	1	QUICK SETUP GUIDE, MFC240C FOR BEL/CHE <FRENCH>		
3	LP5009008	1	QUICK SETUP GUIDE, MFC440C/MFC660CN FOR BEL <DUTCH>		
3	LP5009058	1	QUICK SETUP GUIDE, MFC440C/MFC660CN FOR BEL/CHE		
3	LP5836008	1	QUICK SETUP GUIDE, MFC845CW FOR BEL <DUTCH>		
3	LP5836058	1	QUICK SETUP GUIDE, MFC845CW FOR BEL/CHE <FRENCH>		
3	LP3415009	1	QUICK SETUP GUIDE, MFC240C FOR NLD		
3	LP5941009	1	QUICK SETUP GUIDE, MFC440CN/MFC660CN FOR NLD		chg
3	LP5836009	1	QUICK SETUP GUIDE, MFC845CW FOR NLD		
3	LP5009010	1	QUICK SETUP GUIDE, MFC440CN/MFC660CN FOR CHE		
3	LP5836010	1	QUICK SETUP GUIDE, MFC845CW FOR CHE		
3	LP3415015	1	QUICK SETUP GUIDE, MFC240C FOR SPA		
3	LP5941015	1	QUICK SETUP GUIDE, MFC440CN/MFC660CN FOR SPA		chg
3	LP5836015	1	QUICK SETUP GUIDE, MFC845CW FOR SPA		
3	LP3281016	1	QUICK SETUP GUIDE, DCP130C FOR ITA		
3	LP3295016	1	QUICK SETUP GUIDE, DCP330C/DCP540CN FOR ITA		
3	LP3688016	1	QUICK SETUP GUIDE, DCP750CW FOR ITA		
3	LP3415016	1	QUICK SETUP GUIDE, MFC240C FOR ITA		
3	LP5009016	1	QUICK SETUP GUIDE, MFC440CN/MFC660CN FOR ITA		
3	LP5836016	1	QUICK SETUP GUIDE, MFC845CW FOR ITA		
3	LP3415018	1	QUICK SETUP GUIDE, MFC240C FOR POR		
3	LP5941018	1	QUICK SETUP GUIDE, MFC440CN/MFC660CN FOR POR		chg
3	LP5836018	1	QUICK SETUP GUIDE, MFC845CW FOR POR		
3	LP3281020	1	QUICK SETUP GUIDE, DCP130C FOR CHN		
3	LP3295020	1	QUICK SETUP GUIDE, DCP330C/DCP540CN FOR CHN		
3	LP5697020	1	QUICK SETUP GUIDE, FAX2480C FOR CHN		
3	LS2987020	1	QUICK SETUP GUIDE, MFC230C FOR CHN		
3	LP3415020	1	QUICK SETUP GUIDE, MFC240C FOR CHN		
3	LP5389020	1	QUICK SETUP GUIDE, MFC440CN FOR CHN		
3	LP5554020	1	QUICK SETUP GUIDE, MFC665CW FOR CHN		
3	LP3281040	1	QUICK SETUP GUIDE, DCP130C FOR ASA/OCE		
3	LP3295040	1	QUICK SETUP GUIDE, DCP330C/DCP540CN FOR ASA/OCE		
3	LP5697040	1	QUICK SETUP GUIDE, FAX2480C FOR ASA/OCE		
3	LP3415040	1	QUICK SETUP GUIDE, MFC240C FOR ASA/OCE		
3	LP5389040	1	QUICK SETUP GUIDE, MFC440CN FOR ASA/OCE		
3	LP5554040	1	QUICK SETUP GUIDE, MFC665CW FOR ASA/OCE		
3	LP3281048	1	QUICK SETUP GUIDE, DCP130C FOR RUS		
3	LP3295048	1	QUICK SETUP GUIDE, DCP330C/DCP540CN FOR RUS		
3	LP3415048	1	QUICK SETUP GUIDE, MFC240C FOR RUS		
3	LP3281007	1	QUICK SETUP GUIDE, DCP130C FOR PND <NORWEGIAN>		
3	LP3281012	1	QUICK SETUP GUIDE, DCP130C FOR PND <FINNISH>		
3	LP3281013	1	QUICK SETUP GUIDE, DCP130C FOR PND <DANISH>		
3	LP3281026	1	QUICK SETUP GUIDE, DCP130C FOR PND <SWEDISH>		
3	LP3295007	1	QUICK SETUP GUIDE, DCP330C/DCP540CN FOR PND		
3	LP3295012	1	QUICK SETUP GUIDE, DCP330C/DCP540CN FOR PND <FINNISH>		
3	LP3295013	1	QUICK SETUP GUIDE, DCP330C/DCP540CN FOR PND <DANISH>		
3	LP3295026	1	QUICK SETUP GUIDE, DCP330C/DCP540CN FOR PND <SWEDISH>		
3	LP3688007	1	QUICK SETUP GUIDE, DCP750CW FOR PND <NORWEGIAN>		
3	LP3688012	1	QUICK SETUP GUIDE, DCP750CW FOR PND <FINNISH>		
3	LP3688013	1	QUICK SETUP GUIDE, DCP750CW FOR PND <DANISH>		
3	LP3688026	1	QUICK SETUP GUIDE, DCP750CW FOR PND <SWEDISH>		
3	LP3415007	1	QUICK SETUP GUIDE, MFC240C FOR PND <NORWEGIAN>		
3	LP3415012	1	QUICK SETUP GUIDE, MFC240C FOR PND <FINNISH>		
3	LP3415013	1	QUICK SETUP GUIDE, MFC240C FOR PND <DANISH>		
3	LP3415026	1	QUICK SETUP GUIDE, MFC240C FOR PND <SWEDISH>		
3	LP5009007	1	QUICK SETUP GUIDE, MFC440CN FOR PND <NORWEGIAN>		
3	LP5009012	1	QUICK SETUP GUIDE, MFC440CN FOR PND <FINNISH>		
3	LP5009013	1	QUICK SETUP GUIDE, MFC440CN FOR PND <DANISH>		
3	LP5009026	1	QUICK SETUP GUIDE, MFC440CN FOR PND <SWEDISH>		
3	LP5836007	1	QUICK SETUP GUIDE, MFC845CW FOR PND <NORWEGIAN>		
3	LP5836012	1	QUICK SETUP GUIDE, MFC845CW FOR PND <FINNISH>		
3	LP5836013	1	QUICK SETUP GUIDE, MFC845CW FOR PND <DANISH>		
3	LP5836026	1	QUICK SETUP GUIDE, MFC845CW FOR PND <SWEDISH>		
3	LP3281015	1	QUICK SETUP GUIDE, DCP130C FOR IBR <SPANISH>		
3	LP3281018	1	QUICK SETUP GUIDE, DCP130C FOR IBR <PORTUGUESE>		
3	LP3295015	1	QUICK SETUP GUIDE, DCP330C/DCP540CN FOR IBR <SPANISH>		
3	LP3295018	1	QUICK SETUP GUIDE, DCP330C/DCP540CN FOR IBR		
3	LP3688015	1	QUICK SETUP GUIDE, DCP750CW FOR IBR <SPANISH>		
3	LP3688018	1	QUICK SETUP GUIDE, DCP750CW FOR IBR <PORTUGUESE>		
3	LP3281037	1	QUICK SETUP GUIDE, DCP130C FOR ISR/EEU <CZECH>		

www.brukparts.pl

List12(PACKAGING EU)

REF No.	CODE	Q'TY	DESCRIPTION	RECOMMEND	REMARKS
3	LP3281059	1	QUICK SETUP GUIDE, DCP130C FOR ISR/EEU <HUNGARIAN>		
3	LP3415037	1	QUICK SETUP GUIDE, MFC240C FOR ISR/EEU <CZECH>		
3	LP3415059	1	QUICK SETUP GUIDE, MFC240C FOR ISR/EEU <HUNGARIAN>		
3	LP3295037	1	QUICK SETUP GUIDE, DCP330C/DCP540CN FOR EEU <CZECH>		
3	LP3295059	1	QUICK SETUP GUIDE, DCP330C/DCP540CN FOR EEU <HUNGARIAN>		
4	LP3002001	1	PROTECT CARTRIDGE ASSY CLEANING		
5	LS2119001	1	SHEET 420X450		CHG
6	LP3576001	1	PE BAG 620X800H 50P		
7	LP3052001	1	ACCESSORIES SHEET, DCP130C/DCP330C/DCP750CW FOR FRA/CHE/IBR		
7	LP5935001	1	ACCESSORIES SHEET, DCP130C/DCP330C EXCEPT FOR FRA/CHE/CHN/IBR, DCP750CW FOR GER/UK/ITA/PND		add
7	LP3053001	1	ACCESSORIES SHEET, DCP540CN FOR FRA/CHE/IBR		
7	LP5936001	1	ACCESSORIES SHEET, DCP540CN EXCEPT FOR FRA/CHE/CHN/IBR MFC240C/MFC440CN EXCEPT FOR CHN		add
7	LP3055001	1	ACCESSORIES SHEET, FAX2480C/MFC665CW FOR ASA/OCE, MFC660CN		
7	LP5501001	1	ACCESSORIES SHEET, DCP130C/DCP330C/MFC230C FOR CHN		add
7	LP3573001	1	ACCESSORIES SHEET, FAX/2480C/MFC665CW FOR CHN		
7	LP5502001	1	ACCESSORIES SHEET, DCP540CN/MFC240C/MFC440CN FOR CHN		chg
~~7~~	~~LP5250001~~	~~1~~	~~ACCESSORIES SHEET, MFC240C FOR CHN~~		del
7	LP3569001	1	ACCESSORIES SHEET, MFC845CW		
8	LP3304001	1	REGISTRATION SHEET FOR UK		
(9)	LP3602001	1	QUICK SETUP G WEB TRANS5.0 FOR GER/UK/FRA/BEL/NLD/CHE/AUS/SPA/ITA/ISR/POR/ GNR/ZAF/RUS/PND/IBR/EEU		
10	---		NOT USED		

www.drukparts.pl

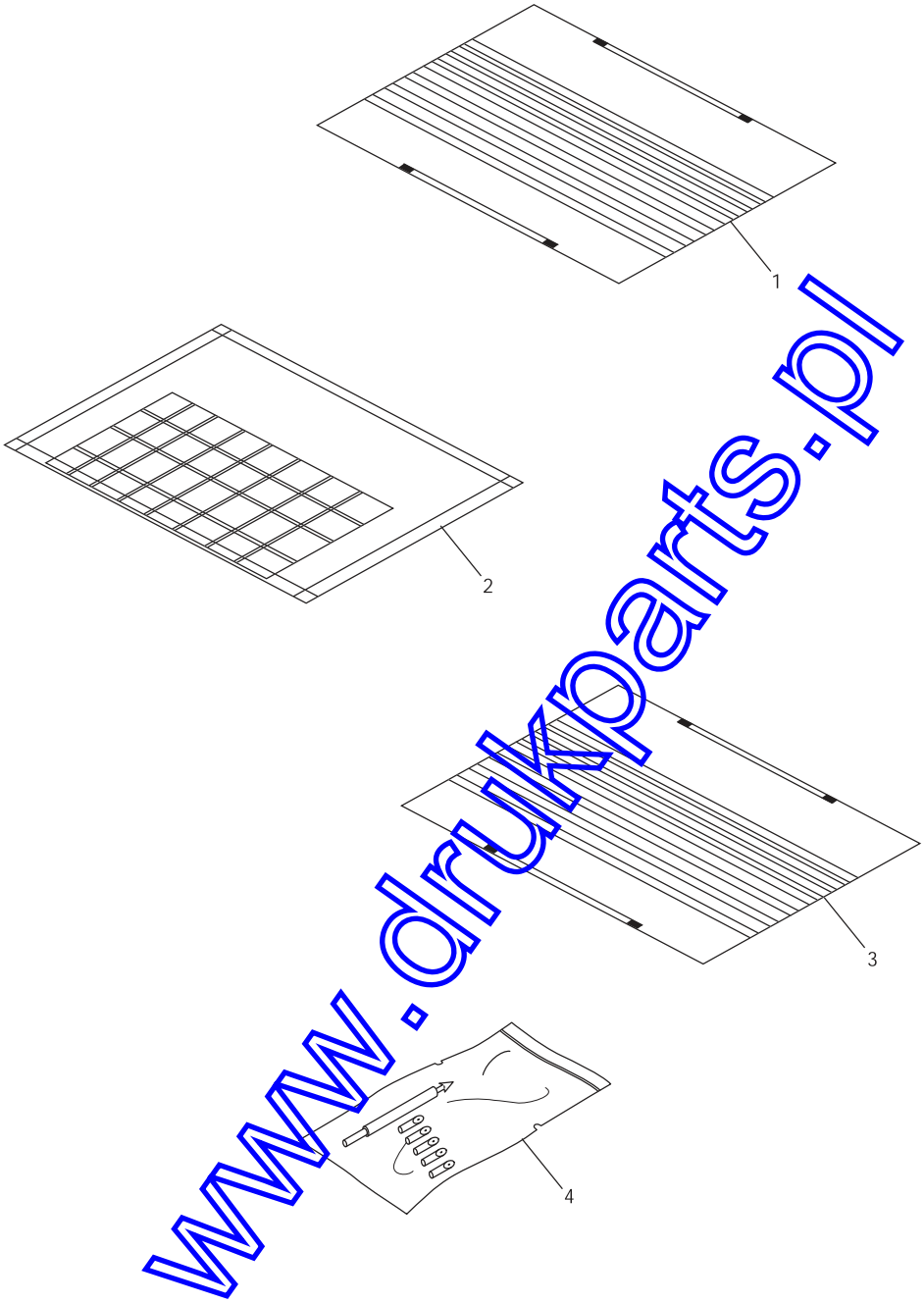

www.drukparts.pl

List13(OTHERS)

REF No.	CODE	Q'TY	DESCRIPTION	RECOMMEND	REMARKS
1	UF8263001	1	TEST CHART-027		
2	UF9258001	1	COLOR TEST CHART CTC-001		
3	UF4600001	1	CONTRAST CHART TC-023		
4	ZA0310001	1	HEAD CLEANER STICK ASSY	√	ADD

www.drukparts.pl

brother

www.drukparts.pl

PL-FAX127
8CAA01
Ver. R-1