KYOCERA

www.drukparts.pl

FS-9130DN
FS-9530DN

PARTS LIST

Published in April 2006
2GZPL070
842GZ120
First Edition

NOTES

1. Indicate parts number and machine model when placing an order.

e.g.	Parts Number	Parts Name	Machine Model	Frequency	Quantity
	302GZ05010	COVER UPPER OPERATION 40	FS-9130DN	50/60Hz	1
	302G105010	COVER UPPER OPERATION 50	FS-9530DN	50/60Hz	1

2. Service calls and freight will be charged separately.

3. Symbols in the "Parts Number" column.

- Parts with "•" are component parts or sub-assemblies of the assembly appearing immediately above them.

e.g.	Parts Number	Parts Name	Parts Number	Parts Name
	302G193080	PARTS LEFT COVER MIDDLE ASSY	•2BL04550	LEVER L COVER LOCK M
			•2BL04560	SPRING L COVER LOCK

- Parts with "••" are component parts or sub-assembly with "•" appearing immediately above them.

e.g.	Parts Number	Parts Name	Parts Number	Parts Name
	•302GR93180	PARTS REAR GUIDE FUSER UNIT	••2BL21290	GUIDE EXIT L
			••2BL21330	PULLEY FEED SHIFT

- Parts with "⊙" indicates the spare parts and the parts without "⊙" can not be supplied.

4. Items indicated in Description column as (OPTION) are supply parts and should be ordered through your Regional Office.

www.drukparts.pl

CONTENTS

FIG. 1 Covers 2
FIG. 2 Frames 4
FIG. 3 Cassette 6
FIG. 4 Paper Feed-In I 8
FIG. 5 Paper Feed-In II 10
FIG. 6 Paper Feed-In III 12
FIG. 7 Paper Conveying 14
FIG. 8 Paper Exit 16
FIG. 9 Bypass Unit 18
FIG. 10 Bypass Feed Unit 20
FIG. 11 LSU 22
FIG. 12 Developer Unit 24
FIG. 13 Fuser Unit 26
FIG. 14 Drum Unit 28
FIG. 15 Drive Unit I 30
FIG. 16 Drive Unit II 32
FIG. 17 Electrical Components I 34
FIG. 18 Electrical Components II 36
FIG. 19 Maintenance Kits 38

• INDEX 39

www.drukparts.pl

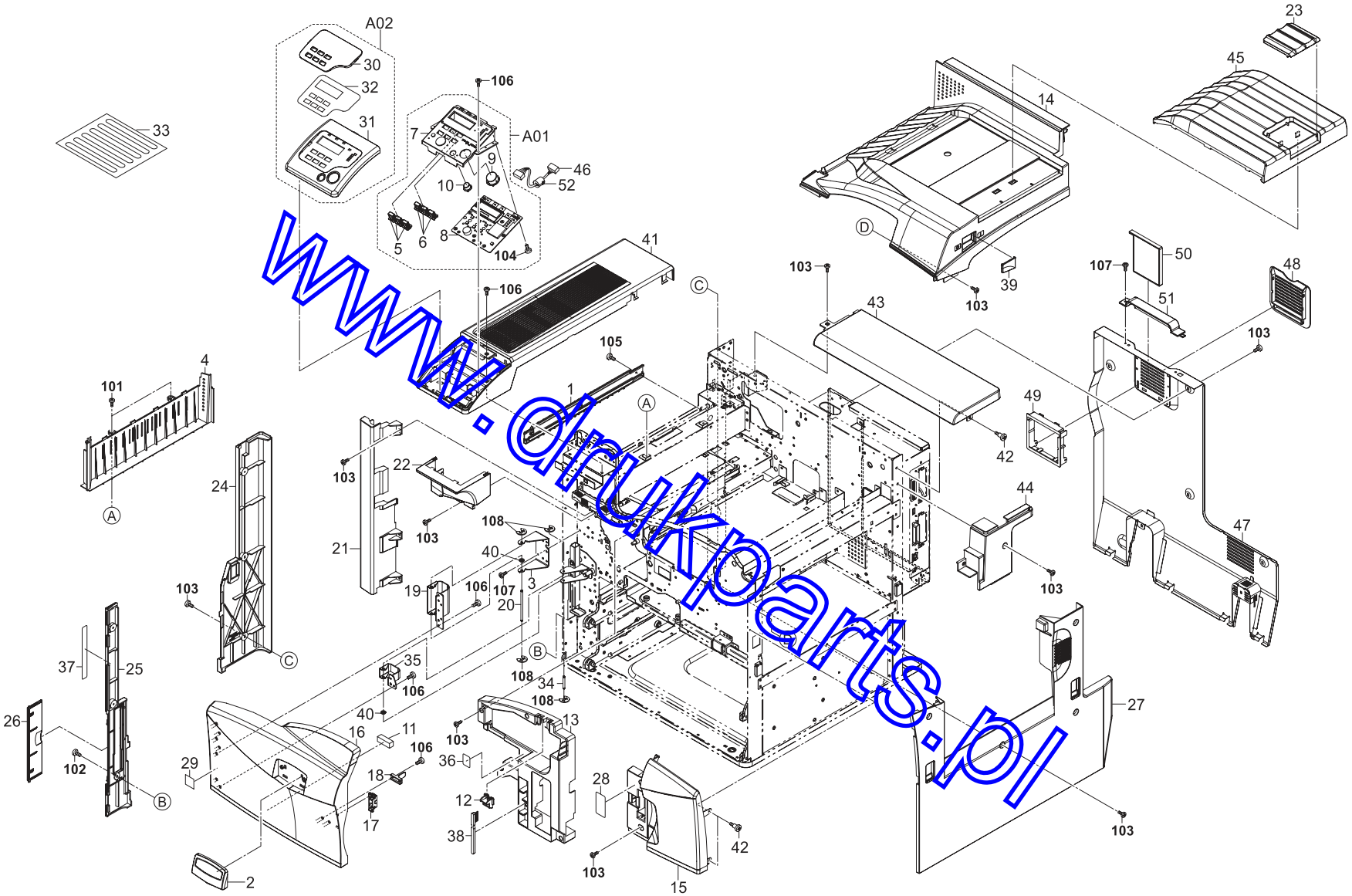

www.dukparts.pl

FIG. 1 Covers

2GZ/2G1

SP	Ref. No.	Part.No.	Alternative.	Description	Quantity 120	230	240
	1	2BL21350		GUIDE DU FEED R	1	1	1
⊙	2	302G194010	2G194010	PARTS,EMBLEM ASS'Y SP	1	1	1
	3	2BL04220		MOUNT HINGE	1	1	1
⊙	4	302BL04101	2BL04101	COVER EXIT LOW	1	1	1
⊙	A01	302G193090	2G193090	PARTS OPERATION UNIT	1	1	1
⊙	5	•2BL04050		KEY OPERATION D	3	3	3
⊙	6	•2BL04280		KEY OPERATION C	3	3	3
	7	•302BL04241	2BL04241	LOWER COVER KEY	1	1	1
⊙	8	•302G101050	2G101050	PANEL PWB ASS'Y	1	1	1
⊙	9	•302G105030	2G105030	KEY GO	1	1	1
⊙	10	•302G105040	2G105040	KEY CANCELL	1	1	1
⊙	11	2BL06620		SPONGE FRONT	1	1	1
	12	2BL04200		LEVER CONT RELEASE	1	1	1
	13	302GR04320	2GR04320	INNER RIGHT COVER	1	1	1
⊙	14	302GR04011	2GR04011	COVER TOP EJECT	1	1	1
⊙	15	302GR04030	2GR04030	COVER RIGHT FRONT	1	1	1
⊙	16	302GR04020	2GR04020	COVER CENTER FRONT	1	1	1
	17	2FB04220		MAGNET CATCH	1	1	1
⊙	18	2BL04330		HOLDER SWITCH	1	1	1
	19	2BL04350		FRONT HINGE COVER R	1	1	1
	20	302BL04191	2BL04191	PIN COVER HINGE	1	1	1
⊙	21	302GR04040	2GR04040	COVER LEFT FRONT LOW	1	1	1
⊙	22	302G104040	2G104040	COVER LEFT FRONT	1	1	1
⊙	23	302BL04401	2BL04401	STOPPER PAPER P	1	1	1
⊙	24	302BL04121	2BL04121	REAR LEFT COVER	1	1	1
⊙	25	302BL04111	2BL04111	FRONT LEFT COVER	1	1	1
⊙	26	302BL04301	2BL04301	LID COVER LEFT	1	1	1
⊙	27	302GR04080	2GR04080	COVER RIGHT SIDE LOW	1	1	1
⊙	28	302GR34200	2GR34200	LABEL CONTAINER	1	1	1
⊙	29	302G634070	2G634070	LABEL ENERGY STAR	1	1	1
⊙	A02	302GZ94010	2GZ94010	PARTS UPPER COVER KEY 40 ASSY (40ppm)	1	1	1
⊙	A02	302G194050	2G194050	PARTS UPPER COVER KEY 50 ASSY (50ppm)	1	1	1
⊙	30	•2BL04250		COVER LCD	1	1	1
⊙	31	•302GZ05010	2GZ05010	COVER UPPER OPERATION 40 (40ppm)	1	1	1
⊙	31	•302G105010	2G105010	COVER UPPER OPERATION 50 (50ppm)	1	1	1
⊙	32	•302G105020	2G105020	SHEET OPERATION E	1	1	1
	33	302F805040	2F805040	LABEL OPERATION SHEET	1	1	
	34	302BL04841	2BL04841	PIN COVER HINGE S	1	1	1
	35	2BL04480		FRONT HINGE S COVER	1	1	1
	36	302GR34180	2GR34180	LABEL SEP CLEANING	1	1	1
⊙	37	302GR34190	2GR34190	LABEL CONVEYING JAM	1	1	1
⊙	38	2BL16220	5AAVBRUSH036	BRUSH CLEANER	1	1	1
⊙	39	302GR04170	2GR04170	COVER MAIN SW	1	1	1
	40	2BL04880		FILM HINGE	2	2	2
⊙	41	2BL04170		LEFT TOP COVER	1	1	1
	42	302BL04411	2BL04411	PIN COVER	3	3	3
⊙	43	2BL04181		REAR TOP COVER	1	1	1
⊙	44	302G104020	2G104020	COVER RIGHT TOP	1	1	1
⊙	45	302G104030	2G104030	TRAY SUB	1	1	1
	46	302G146040	2G146040	WIRE OPE FRONT	1	1	1
	47	302G104010	2G104010	COVER REAR	1	1	1
⊙	48	302GR04250	2GR04250	COVER OZONE	1	1	1
	49	302GR04260	2GR04260	HOUSING OZONE COVER	1	1	1
⊙	50	302FG23050	2FG23050	FILTER OZONE B	1	1	1
⊙	51	302G104050	2G104050	COVER UPPER REAR	1	1	1
	52	33927590		CORE 7-15X18	1	1	1
	101	BAB53060		+TP TAP-TITE S SCREW M3X06			
	102	B4A03100		+TP-A SCREW M3X10(TRIVALENT CHROMATI			
	103	5MBSP43006NW++R	B4A03060	TP HEAD SCREW(+) / M3 X 6 DRFREE			
	104	7BB200P08H	BB046950	BIND T.T SCREW(+)/M2.6X8 CRFREE P-T			
	105	5MBTPB3006TW++R	B1A53060	BIND T.T SCREW(+) / M3 X 6 CRFREE S-T			
	106	5MBTPB3008PW++R	B1A63080	BIND T.T SCREW(+) / M3 X 8 CRFREE P-T			
	107	B1B03050		+BIND SCREW M3X05(TRIVALENT CHROMAT			
	108	7BD103060+++H01	BD018610	E STOP RING E-3			

• Parts with "•" are component parts or sub-assemblies of the assembly appearing immediately above them.

• Parts with "⊙" indicates the spare parts.

• Parts with "• •" are component parts or sub-assembly with "•" appearing immediately above them.

www.drukparts.pl

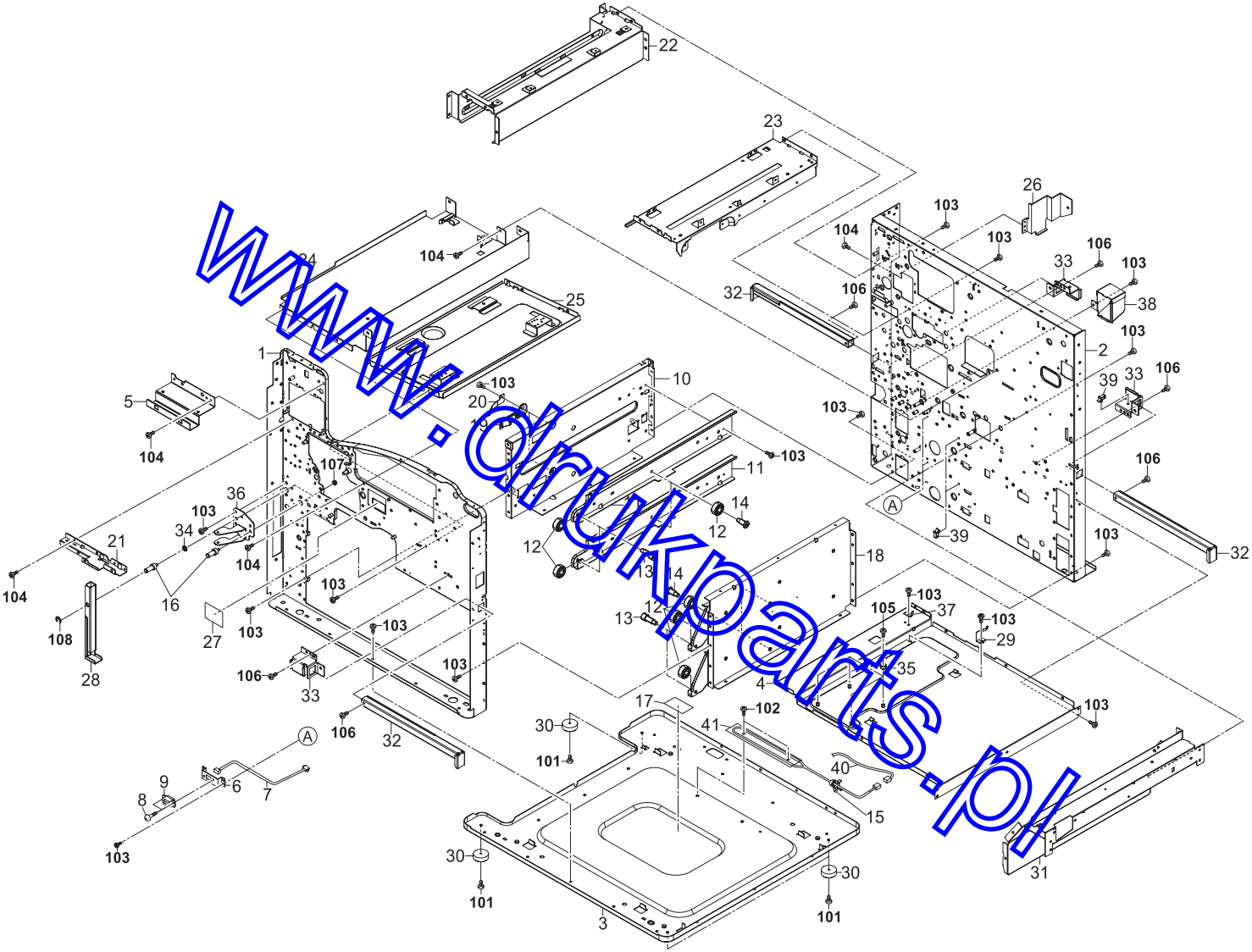

www.druk-parts.pl

FIG. 2 Frames

SP	Ref. No.	Part.No.	Alternative.	Description	Quantity 120	230	240
	1	302FG02042	2FG02042	FRONT FRAME	1	1	1
	2	302FG02051	2FG02051	REAR FRAME	1	1	1
	3	2BL02030		BASE	1	1	1
	4	302BL02041	2BL02041	BASE MIDDLE	1	1	1
	5	2BL04290		MOUNT OPERATION	1	1	1
	6	2AR07710		MOUNT,PAPER FEED DRAWER	2	2	2
	7	302GR46440	2GR46440	WIRE PRIMARY FEED UNIT2	2	2	2
	8	3033927451	33927451	RETAINING PIN,DRAWER	4	4	4
⊙	9	7YCC08B2046+H02	YC026130	CONNECTOR	2	2	2
	10	302FG02071	2FG02071	LOWER LEFT REINFORCEMENT	1	1	1
	11	302FG07032	2FG07032	LEFT RAIL CASSETTE	2	2	2
	12	302FG07020	2FG07020	PULLEY CASSETTE RAIL	8	8	8
	13	302GR02240	2GR02240	PIN FRONT CASSETTE RAIL	4	4	4
	14	2FB06710		PIN CASSETTE RAIL	4	4	4
	15	M2107120	49827700	BINDING BAND SCR130	1	1	1
	16	302BL02171	2BL02171	PIN HANDLE	2	2	2
	17	20305130		LABEL L,HIGH TEMPERATURE CAUTION(EXP)	1	1	1
	18	302GR02250	2GR02250	LOWER RIGHT REINFORCEMENT	1	1	1
	19	302GR02221	2GR02221	LEVER LOCK CASSETTE	2	2	2
	20	302GR02230	2GR02230	SPRING LEVER	2	2	2
	21	302GR02130	2GR02130	MOUNT TRAY EJECT	1	1	1
	22	302GR02550	2GR02550	UPPER PLATE FIXING	1	1	1
	23	302GR02110	2GR02110	UPPER PLATE DRUM	1	1	1
	24	2BL02130		LOWER PLATE CONT	1	1	1
	25	2BL02050		LOWER BASE LSU	1	1	1
	26	302G104070	2G104070	MOUNT COVER REAR R	1	1	1
	27	2BL05150		LABEL RADIATION	1	1	1
	28	302GR02350	2GR02350	HANDLE MACHINE	1	1	1
	29	2BL06840		SPRING BYPASS RET	1	1	1
	30	2AR02180		BASE RUBBER	4	4	4
	31	302BL02122	2BL02122	UPPER RIGHT PLATE	1	1	1
	32	302GR02340	2GR02340	RIGHT HANDLE MACHINE	3	3	3
	33	2BL02150		MOUNT RIGHT HANDLE	3	3	3
	34	2BL04880		FILM HINGE	1	1	1
	35	2BL06590		PULLEY RAIL	4	4	4
	36	2BL04470		MOUNT HINGE S	1	1	1
	37	2BL06410		GROUND PLATE MIDDLE	1	1	1
	38	2AR07720		COVER,CASSETTE RAIL	1	1	1
	39	7YZM610007++H01	YZ023340	ASSCESS.SADDLE	3	3	3
	40	302GR46740	2GR46740	WIRE DEHUMIDIFIER HEATER JUNCTION	1	1	1
⊙	41	302FB25051	2FB25051	HEATER DEHUMIDIFIER 120	1		
⊙	41	302FB25060	2FB25060	HEATER DEHUMIDIFIER 240		1	1

SP	Ref. No.	Part.No.	Alternative.	Description	Quantity 120	230	240
	101	B4A03100		+TP-A SCREW M3X10(TRIVALENT CHROMATI			
	102	B1B04060		+BIND SCREW M4X06(TRIVALENT CHROMATI			
	103	5MBTPB3006TW++R	B1A53060	BIND T.T SCREW(+) / M3 X 6 CRFREE S-T			
	104	B1B03050		+BIND SCREW M3X05(TRIVALENT CHROMATI			
	105	B4A03040		+TP-A SCREW M3X04(TRIVALENT CHROMATI			
	106	5MBTPB4006TW++R	B1A54060	BIND T.T SCREW(+) / M4 X 6 CRFREE S-T			
	107	C1B14070		NUT SNM4(TRIVALENT CHROMATING)			
	108	D1A00700		STOP RING E-7(TRIVALENT CHROMATING)			

• Parts with "•" are component parts or sub-assemblies of the assembly appearing immediately above them.

• Parts with "⊙" indicates the spare parts.

• Parts with "• •" are component parts or sub-assembly with "•" appearing immediately above them.

www.drukparts.pl

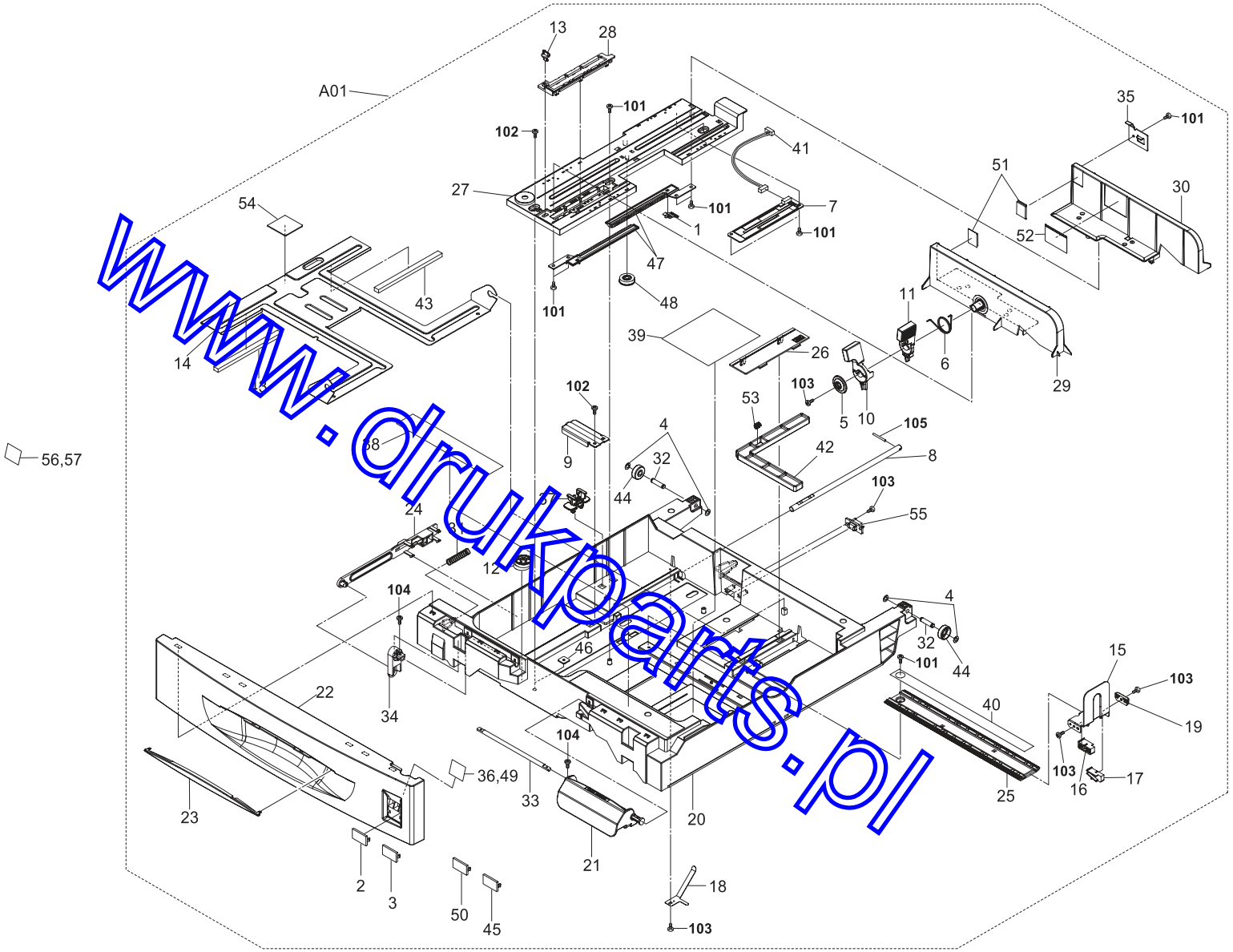

www.drukoarts.pl

FIG. 3 Cassette

2GZ/2G1

SP	Ref. No.	Part.No.	Alternative.	Description	Quantity 120	230	240
⊙	A01	302GR93080	2GR93080	CT-710	2	2	2
⊙	1	•2BC07860		TERMINAL,PAPER SIZE DETECTION	2	2	2
⊙	2	•2BL04310		PLATE NUMBER	2	2	2
⊙	3	•2BL04370		PLATE NUMBER 2	2	2	2
	4	•2C904550		CUT WASHER 5	8	8	8
	5	•2FB07050		PIN CURSOR	2	2	2
	6	•2FB07060		SPRING CURSOR	2	2	2
⊙	7	•2FG01020		SIZE DETECTION ASS'Y	2	2	2
	8	•302AR07041	2AR07041	SHAFT,WORK PLATE	2	2	2
	9	•302BC06091	2BC06091	WORK PLATE,LIFT CASSETTE	2	2	2
	10	•302FB07032	2FB07032	LEVER CURSOR A	2	2	2
	11	•302FB07042	2FB07042	LEVER CURSOR B	2	2	2
	12	•302FB07340	2FB07340	ADJUSTING PLATE CASSETTE	2	2	2
	13	•302FB07420	2FB07420	PIN CASSETTE	2	2	2
	14	•302FG07091	2FG07091	BASE CASSETTE	2	2	2
⊙	15	•302FG07151	2FG07151	CURSOR CASSETTE	2	2	2
⊙	16	•302FG07170	2FG07170	FRONT GUIDE C,CURSOR	2	2	2
⊙	17	•302FG07180	2FG07180	REAR GUIDE C,CURSOR	2	2	2
	18	•302FG07200	2FG07200	GROUND PLATE CASSETTE	2	2	2
⊙	19	•302FG07230	2FG07230	STOPPER,TRAILING EDGE DETECTION	2	2	2
	20	•302GR09010	2GR09010	CASSETTE	2	2	2
⊙	21	•302GR09020	2GR09020	HANDLE CASSETTE 1	2	2	2
⊙	22	•302GR09030	2GR09030	COVER CASSETTE	2	2	2
⊙	23	•302GR09040	2GR09040	HANDLE CASSETTE 2	2	2	2
	24	•302GR09050	2GR09050	LEVER CASSETTE	2	2	2
	25	•302GR09060	2GR09060	RAIL CURSOR R	2	2	2
	26	•302GR09070	2GR09070	LID PAPER SIZE	2	2	2
	27	•302GR09080	2GR09080	RAIL CURSOR A	2	2	2
	28	•302GR09090	2GR09090	SUPPORT PLATE	2	2	2
⊙	29	•302GR09102	2GR09102	FRONT CURSOR CASSETTE	2	2	2
⊙	30	•302GR09112	2GR09112	REAR CURSOR CASSETTE	2	2	2
	31	•302GR09120	2GR09120	SPRING LEVER CASSETTE	2	2	2
	32	•302GR09130	2GR09130	SHAFT PULLEY	4	4	4
	33	•302GR09140	2GR09140	SHAFT HANDLE	2	2	2
⊙	34	•302GR09150	2GR09150	WORK PLATE HANDLE	2	2	2
	35	•302GR09160	2GR09160	STOPPER PAPER	2	2	2
⊙	36	•302GR09201	2GR09201	PLATE SIZE INCH	2	2	2
	37	•302GR09990	2GR09990	LIFT LOCK	2	2	2
⊙	38	•302GR34010	2GR34010	LABEL CASSETTE OPERATION	2	2	2
⊙	39	•302GR34021	2GR34021	LABEL PAPER SIZE	2	2	2
⊙	40	•302GR34031	2GR34031	LABEL PAPER SIZE R	2	2	2
	41	•302GR46450	2GR46450	WIRE CASSETTE UNIT	2	2	2
	42	•33907170		DETECTION PLATE,PAPER SIZE	2	2	2
	43	•33907210		CUSHION,CASSETTE WORK PLATE	4	4	4
	44	•34907150		PULLEY,CASSETTE	4	4	4
⊙	45	•3CF04060		PLATE NUMBER4	2	2	2
	46	•3CY06030		RETAINER M4	2	2	2
⊙	47	•3CY06090		RACK CURSOR	4	4	4
⊙	48	•3CY06100		GEAR 20,CURSOR	2	2	2
⊙	49	•5MVS446VE001	2BL06470	PLATE SIZE C /2BL06470A A4	2	2	2
⊙	50	•5MVX321CE001	3CF04050	PLATE NUMBER 3 /3CF0405 A4	2	2	2
⊙	51	•60907170		CUSHION,CASSETTE R	4	4	4
⊙	52	•61705110		LABEL,PAPER UPPER LIMIT	2	2	2
	53	•66106080		SPRING,PAD	2	2	2
	54	•66107100		PAD,CASSETTE	2	2	2
⊙	55	•7YCC08B2046+H01	YC026110	CONNECTOR	2	2	2
⊙	56	302FB05200	2FB05200	PLATE SIZE C	2	2	2
⊙	57	302GR09201	2GR09201	PLATE SIZE INCH	2	2	2
	101	BAA63080		+TP TAP-TITE P SCREW M3X08			
	102	B4B04080		+TP-A SCREW M4X08(TRIVALENT CHROMATI			
	103	5MBTPB3008PW++R	B1A63080	BIND T.T SCREW(+) / M3 X 8 CRFREE P-T			
	104	B1B03050		+BIND SCREW M3X05(TRIVALENT CHROMATI			
	105	5MBP2514WXSP	E0025250	SPRING PIN /M2.5 X 14 S-BLK			

www.drukparts.pl

• Parts with "•" are component parts or sub-assemblies of the assembly appearing immediately above them.

• Parts with "⊙" indicates the spare parts.

• Parts with "• •" are component parts or sub-assembly with "•" appearing immediately above them.

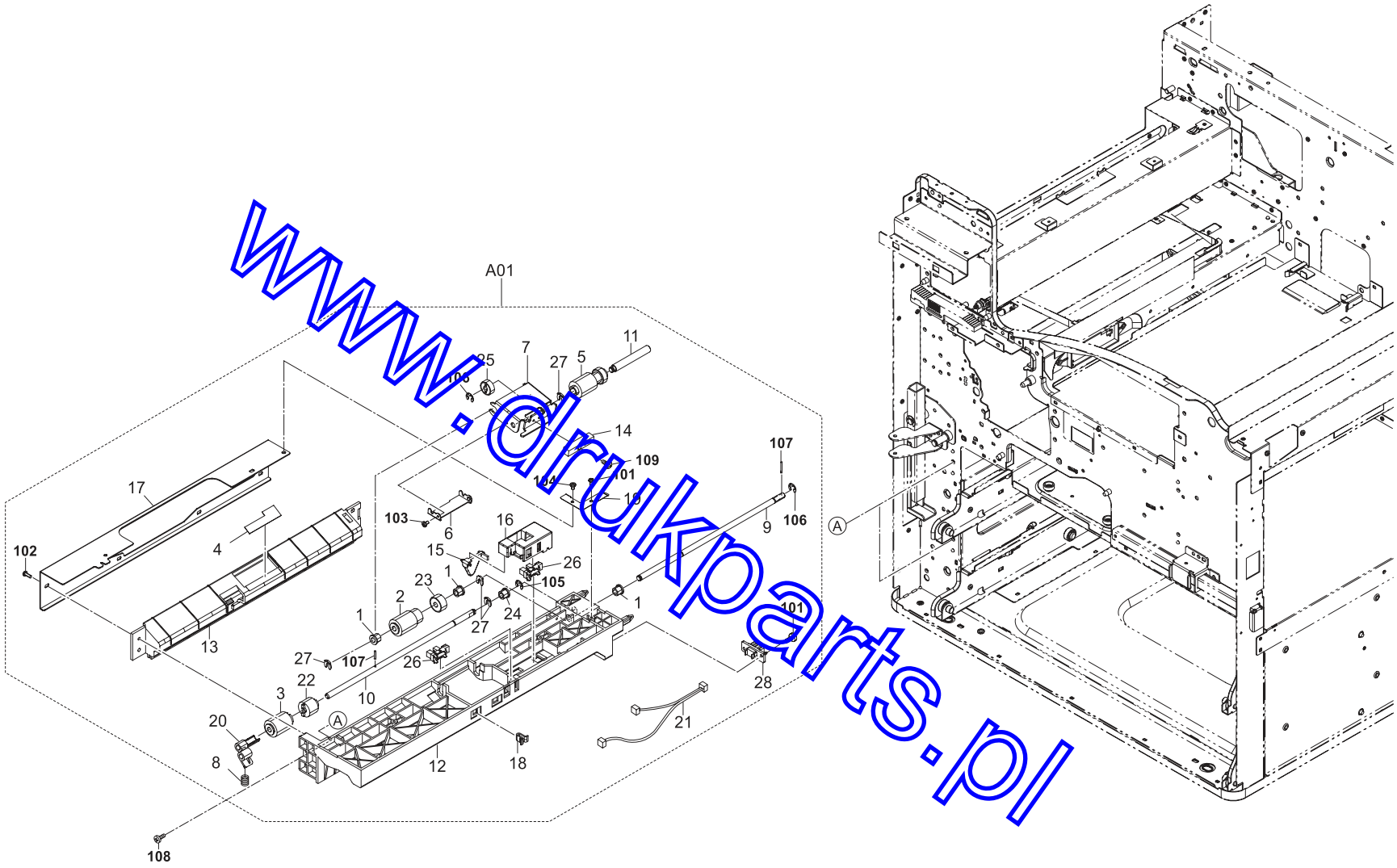

www.drukparts.pl

FIG. 4 Paper Feed-In I

2GZ/2G1

SP	Ref. No.	Part.No.	Alternative.	Description	Quantity 120	230	240
⊙	A01	302GR93020	2GR93020	PARTS PRIMARY PAPER FEED UNIT	2	2	2
	1	•29806810		BUSHING,6 REGISTRATION	6	6	6
⊙	2	•2AR07220		PULLEY,PAPER FEED	2	2	2
⊙	3	•2AR07230		PULLEY,SEPARATION	2	2	2
	4	•2AR07660		GUIDE FILM,SEPARATION PULLEY	2	2	2
⊙	5	•2BJ06010		PULLEY FEED A	2	2	2
	6	•2BL07900		PLATE LEADING FEED	2	2	2
	7	•2BL07910		SUPPORT PLATE FEED	2	2	2
	8	•2BL07990		SPRING SEPARATION	2	2	2
	9	•302AR07251	2AR07251	SHAFT,PAPER FEED	2	2	2
	10	•302AR07261	2AR07261	SHAFT,SEPARATION	2	2	2
	11	•302AR07271	2AR07271	SHAFT,LEADING FEED	2	2	2
	12	•302FG07251	2FG07251	UPPER HOUSING,PAPER FEED	2	2	2
	13	•302FG07260	2FG07260	LOWER HOUSING,PAPER FEED	2	2	2
	14	•302FG07271	2FG07271	WEIGHT LEADING FEED PULLEY	2	2	2
	15	•302FG07290	2FG07290	ACTUATOR,PAPER EMPTY	2	2	2
	16	•302FG07300	2FG07300	HOLDER,ACTUATOR	2	2	2
	17	•302FG07310	2FG07310	REINFORCEMENT,PRIMARY PAPER FEED	2	2	2
	18	•302FG07320	2FG07320	STOPPER,SUPPORT PLATE	2	2	2
	19	•302FG07330	2FG07330	GROUND PLATE,PRIMARY PAPER FEED	2	2	2
	20	•302GR06200	2GR06200	LEVER SEPARATION RELEASE	2	2	2
	21	•302GR46430	2GR46430	WIRE PRIMARY FEED UNIT	2	2	2
⊙	22	•33906070		TORQUE LIMITER,PAPER FEED	2	2	2
⊙	23	•33906160		GEAR 16,PAPER FEED	2	2	2
	24	•34806040		LOWER BUSHING,PAPER FEED	2	2	2
⊙	25	•34922420		GEAR 15	2	2	2
⊙	26	•5FNXGP1A73A++02	2DC27180	PT.SENSOR GP1A73AJ00/ BK	4	4	4
	27	•5MVX111DN003	2A806250	RING STOPPER /A-49 FEED A4	8	8	8
	28	•7YCC08B2046+H01	YC026110	CONNECTOR	2	2	2

SP	Ref. No.	Part.No.	Alternative.	Description	Quantity 120	230	240
	101	5MBTPB3008PW++R	B1A63080	BIND T.T SCREW(+) / M3 X 8 CRFREE P-T			
	102	5MBTPB3010PW++R	B1B63100	BIND T.T SCREW(+) / M3 X 10 CRFREE P-T			
	103	B1B03040		+BIND SCREW M3X04(TRIVALENT CHROMATI			
	104	B1B03050		+BIND SCREW M3X05(TRIVALENT CHROMATI			
	105	D1A00400		STOP RING E-4(TRIVALENT CHROMATING)			
	106	D1A00500		STOP RING E-5(TRIVALENT CHROMATING)			
	107	5MBP2012WXSP	E0020120	SPRING PIN / M2 X 12 S-BLK			
	108	5MBSP43006NW++R	B4A03060	TP HEAD SCREW(+) / M3 X 6 DRFREE			
	109	7BB003310H	BB023700	COUNTER-SUNK HEAD SCREW FHM3X10			

• Parts with "•" are component parts or sub-assemblies of the assembly appearing immediately above them.

• Parts with "⊙'" indicates the spare parts.

• Parts with "• •" are component parts or sub-assembly with "•" appearing immediately above them.

www.drukparts.pl

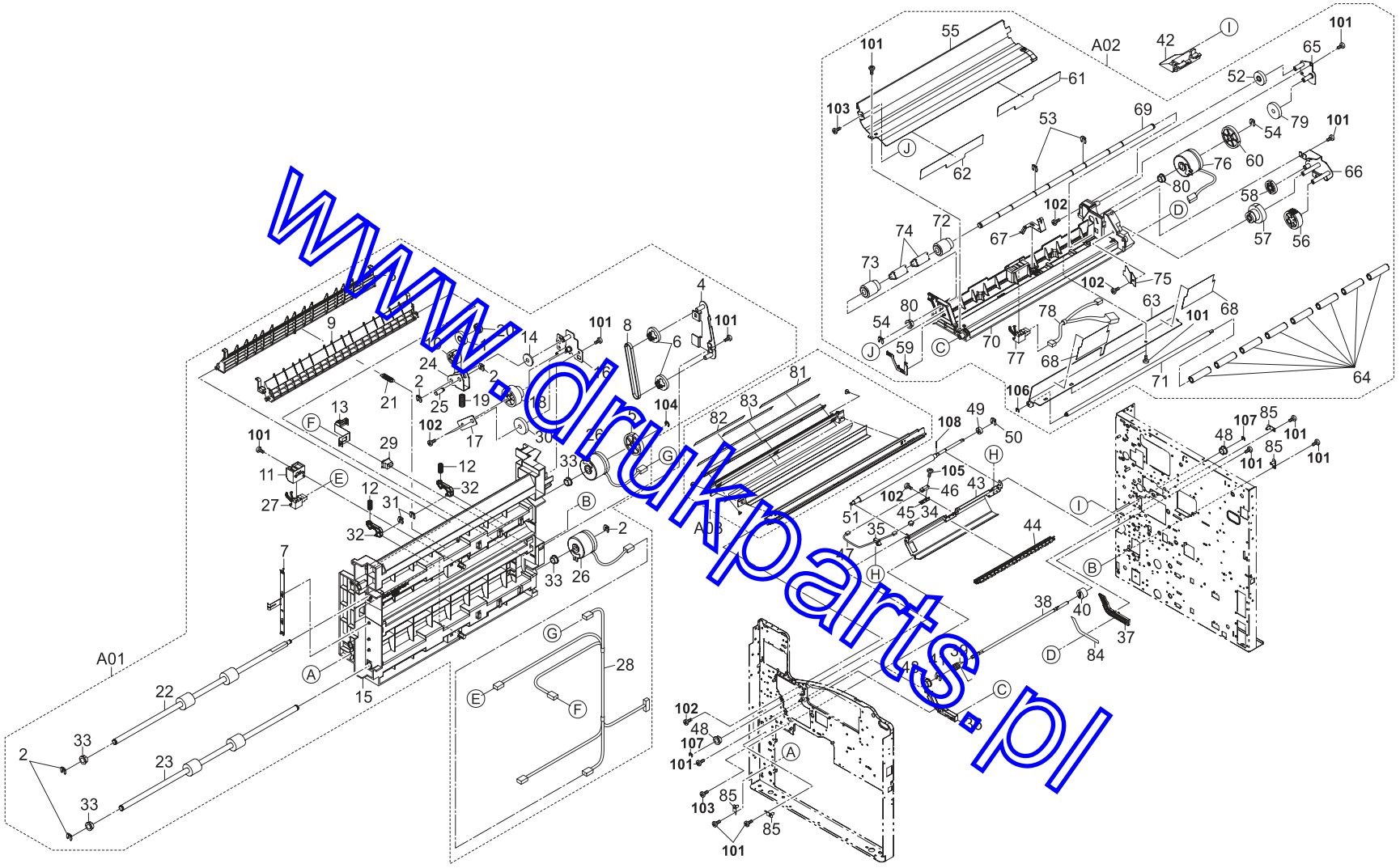
A01
A02
A03
www.drukparts.pl

FIG. 5 Paper Feed-In II

2GZ/2G1

SP	Ref. No.	Part.No.	Alternative.	Description	Quantity 120	230	240
⊙	A01	302GR93160	2GR93160	PARTS VERTICAL FEED UNIT	1	1	1
⊙	1	•2AL06110		GEAR 25	1	1	1
	2	•2BC06980		STOPPER 5	5	5	5
	3	•2BL06110		GUIDE VERTICAL FEED	1	1	1
	4	•2BL06130		MOUNT C FEED DRIVE	1	1	1
⊙	5	•2BL06170		GEAR Z42 FEED	1	1	1
⊙	6	•2BL06180		GEAR Z28-P18 FEED	2	2	2
	7	•2BL06220		EARTH VERTICAL FEED	1	1	1
⊙	8	•2BL06320		BELT CONVEYING	1	1	1
	9	•2BL06330		GUIDE B FEED	1	1	1
⊙	10	•2BL06380		GEAR Z25 JOINT	1	1	1
	11	•2BL06450		HOLDER FEED SWITCH	2	2	2
	12	•2BL06460		SPRING,LEFT COVER	2	2	2
	13	•2BL06940		EARTH,PUSH SWITCH	1	1	1
	14	•2BL06990		STOPPER GEAR Q=5	1	1	1
	15	•2FG06010		FRAME VERTICAL FEED A	1	1	1
	16	•2FG06020		MOUNT FEED DRIVE A	1	1	1
	17	•2FG06030		MOUNT FEED DRIVE B	1	1	1
⊙	18	•2FG06040		GEAR Z21-Z36 FEED	1	1	1
	19	•2FG06070		SPRING FEED JOINT	1	1	1
	20	•2FG06120		COLLAR FEED JOINT	1	1	1
	21	•2FG06130		SPRING GUIDE FEED	1	1	1
⊙	22	•302BL06081	2BL06081	ROLLER B FEED	1	1	1
⊙	23	•302BL06091	2BL06091	ROLLER C FEED	1	1	1
	24	•302FG06051	2FG06051	JOINT FEED DRIVE	1	1	1
	25	•302FG06061	2FG06061	SHAFT FEED JOINT	1	1	1
⊙	26	•302GR44120	2GR44120	CLUTCH FEED	2	2	2
⊙	27	•302GR44220	2GR44220	SWITCH CONVEYING	2	2	2
	28	•302GR46260	2GR46260	WIRE CONVEYING	1	1	1
⊙	29	•35927420		SWITCH,SIZE	1	1	1
⊙	30	•36222250		GEAR 30,IDLE	1	1	1
	31	•5MVX111DN003	2A806250	RING STOPPER /A-49 FEED A4	2	2	2
⊙	32	•5MVX421DN003	2BL06490	LOCK COVER R /40283V0068 A4	2	2	2
	33	•67322230		BUSHING 8	4	4	4
	34	7YCC03B1106+H01	YC047300	CONNECTOR	1	1	1
	35	7YZM610007++H01	YZ023340	ASSCESS.SADDLE	1	1	1
	36	2BL06051		FRONT RAIL FEED	1	1	1
	37	2BL06061		REAR RAIL FEED	1	1	1
	38	302BL04521	2BL04521	SHAFT LEFT COVER M	1	1	1
	39	302BL16232	2BL16232	SPRING CONV OPEN	1	1	1
	40	2BL06950		DUMPER LEFT COVER	1	1	1
	41	33973300		STOPPER 7,CARTRIDGE	1	1	1
	42	2BL06430		COVER CONNECTOR	1	1	1
	43	2BL06260		FRONT GUIDE REGIST	1	1	1
⊙	44	2BL93450		PARTS,REGISTRATION CLEAN	1	1	1
	45	2BL06440		MOUNT REGIST SWITCH	1	1	1
⊙	46	2FG27110		SWITCH REGISTRATION	1	1	1
	47	302GR46240	2GR46240	WIRE RESISTRATION	1	1	1
	48	67322230		BUSHING 8	3	3	3
⊙	49	36722860		GEAR 18	1	1	1
	50	2BC06910		STOPPER 6	1	1	1
⊙	51	302FG06211	2FG06211	RIGHT ROLLER REGIST	1	1	1
⊙	A02	302GR93150	2GR93150	PARTS MIDDLE FEED UNIT	1	1	1
⊙	52	•2AL06110		GEAR 25	1	1	1
	53	•2BC06910		STOPPER 6	2	2	2
	54	•2BC06980		STOPPER 5	2	2	2
	55	•2BL06020		GUIDE A FEED	1	1	1
⊙	56	•2BL06150		GEAR Z28 FEED	1	1	1
⊙	57	•2BL06160		GEAR Z35-15 FEED	1	1	1
⊙	58	•2BL06190		GEAR Z25 FEED	1	1	1
	59	•2BL06230		GROUND PLATE A FEED	1	1	1
⊙	60	•2BL06360		GEAR Z42 BYPASS	1	1	1
⊙	61	•2BL06480		FILM REGIST F	1	1	1
⊙	62	•2BL06970		FILM REGIST FF	1	1	1
	63	•2FG06090		GUIDE MIDDLE FEED	1	1	1
⊙	64	•2FG06110		PULLEY MIDDLE FEED	8	8	8
	65	•2FG06150		MOUNT MID FEED DRIVE	1	1	1
	66	•2FG06160		MOUNT BYPASS FEED	1	1	1
	67	•2FG06170		GROUND PLATE GUIDE A	1	1	1
	68	•2FG06200		FILM MIDDLE FEED	2	2	2
	69	•302BL06921	2BL06921	SHAFT FEED A	1	1	1
	70	•302FG06082	2FG06082	HOUSING FEED	1	1	1
	71	•302FG06101	2FG06101	SHAFT MIDDLE FEED	1	1	1
⊙	72	•302GR06010	2GR06010	PULLEY MIDDLE FEED A	1	1	1
⊙	73	•302GR06020	2GR06020	PULLEY MIDDLE FEED B	1	1	1
	74	•302GR06030	2GR06030	JOINT FEED	2	2	2
	75	•302GR06220	2GR06220	HOLDER WIRE	1	1	1
⊙	76	•302GR44140	2GR44140	CLUTCH REGISTRATION	1	1	1
⊙	77	•302GR44220	2GR44220	SWITCH CONVEYING	1	1	1
	78	•302GR46280	2GR46280	WIRE FEED 1	1	1	1
	79	•36222250		GEAR 30,IDLE	1	1	1
	80	•67322230		BUSHING 8	2	2	2
⊙	A03	302FG93111	2FG93111	PARTS,GUIDE TRANSFER	1	1	1
	81	2FG00080		LABEL DRUM CAUTION E1		1	1
	82	2FG05090		LABEL DRUM CAUTION E2		1	1
	83	2FG05100		LABEL DRUM CAUTION A	1		
⊙	84	2FG06220		FILM MIDDLE FEED RAIL R	1	1	1
	85	302GR02330	2GR02330	PIN FEED	4	4	4
	101	5MBTPB3008TW++R	B1A53080	BIND T.T SCREW(+) / M3 X 8 CRFREE S-T			
	102	B1B03050		+BIND SCREW M3X05(TRIVALENT CHROMAT			
	103	5MBTPB3006TW++R	B1A53060	BIND T.T SCREW(+) / M3 X 6 CRFREE S-T			
	104	5MBCE4060XSW	D1000400	E STOP RING /X 4 X 0.6T S-UNICR			
	105	B1B03120		+BIND SCREW M3X12(TRIVALENT CHROMAT			
	106	7BD103060+++H01	BD018610	E STOP RING E-3			
	107	D1A00700		STOP RING E-7(TRIVALENT CHROMATING)			
	108	5MBP2012WXSP	E0020120	SPRING PIN / M2 X 12 S-BLK			

• Parts with "•" are component parts or sub-assemblies of the assembly appearing immediately above them.

• Parts with "⊙'" indicates the spare parts.

• Parts with "• •" are component parts or sub-assembly with "•" appearing immediately above them.

www.drukparts.pl

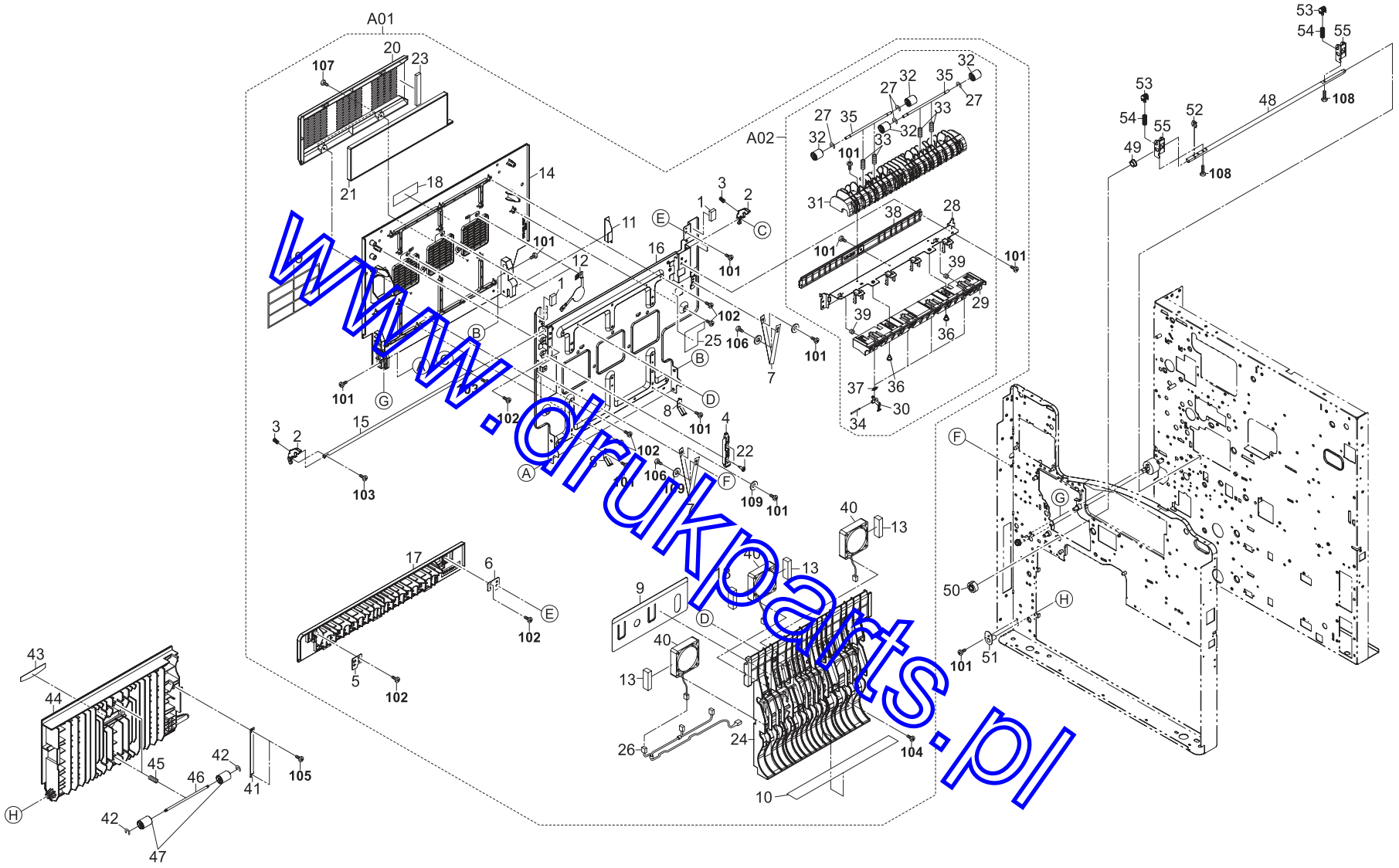

www.drukparts.pl

FIG. 6 Paper Feed-In III

2GZ/2G1

SP	Ref. No.	Part.No.	Alternative.	Description	Quantity 120	230	240
⊙	A01	302G193080	2G193080	PARTS LEFT COVER MIDDLE ASSY	1	1	1
	1	•2AC26310		SHIELD 10X8X20,GASKET	2	2	2
⊙	2	•2BL04550		LEVER L COVER LOCK M	2	2	2
	3	•2BL04560		SPRING L COVER LOCK	2	2	2
	4	•2BL04600		LEVER COVER RELEASE	1	1	1
	5	•2BL04660		FRONT PLATE EXIT L	1	1	1
	6	•2BL04670		REAR PLATE EXIT L	1	1	1
	7	•2BL04680		STRAP COVER	2	2	2
	8	•2BL04700		GROUND PLATE LEFT B	2	2	2
	9	•2BL21460		FILM WIRE PROTECT	1	1	1
	10	•2BL21490		GUIDE FILM DU	1	1	1
	11	•2BL21500		FILM WIRE PROTECT B	1	1	1
	12	•2BL23110		GROUND PLATE LEFT FAN	3	3	3
⊙	13	•2BL23170		SPONGE LEFT FAN	4	4	4
⊙	14	•302BL04512	2BL04512	LEFT COVER MIDDLE	1	1	1
	15	•302BL04541	2BL04541	SHAFT L COVER LOCK M	1	1	1
	16	•302BL04621	2BL04621	PLATE LEFT COVER M	1	1	1
⊙	17	•302BL04651	2BL04651	COVER EXIT L	1	1	1
	18	•302FB05380	2FB05380	LABEL VFEED CAUTION	1	1	1
	19	•302FB05440	2FB05440	LABEL VFEED CAUTION SNATIONS	1	1	1
	20	•302FG23021	2FG23021	MOUNT OZONE FILTER A	1	1	1
⊙	21	•302FG23030	2FG23030	FILTER OZONE A	1	1	1
	22	•302GR02810	2GR02810	PIN LEFT COVER	2	2	2
	23	•302GR04460	2GR04460	SEAL PROTECT OZONE	1	1	1
	24	•302GR28050	2GR28050	GUIDE LEFT COVER M	1	1	1
	25	•302GR34150	2GR34150	LABEL HIGH TEMP	1	1	1
	26	•302GR46310	2GR46310	WIRE CONVEYING FAN	1	1	1
⊙	A02	•302GR93180	2GR93180	PARTS REAR GUIDE FUSER UNIT	1	1	1
	27	••2BL16290		CUT WASHER 3	4	4	4
	28	••2BL20091		MOUNT REAR GUIDE	1	1	1
	29	••2BL20100		REAR GUIDE FIXING	1	1	1
⊙	30	••2BL20350		CLAW PRESS ROLLER	4	4	4
	31	••2BL21290		GUIDE EXIT L	1	1	1
⊙	32	••2BL21330		PULLEY FEED SHIFT	4	4	4
	33	••2BL21340		SPRING CHANGE PULLEY	4	4	4
	34	••302AR20511	2AR20511	SHAFT,PRESSURE ROLLER SEPARATION CLAW	4	4	4
⊙	35	••302BL21362	2BL21362	SHAFT CHANGE PULLEY	2	2	2
	36	••302GR02840	2GR02840	PIN REAR GUIDE FIXING	2	2	2
⊙	37	••302GR25350	2GR25350	SPRING CLAW PRESS	4	4	4
	38	••302GR28040	2GR28040	GUIDE FEED SHIFT L	1	1	1
	39	••65009050		SPRING,DEVELOPING ROCK	2	2	2
⊙	40	•302GR94340	2GR94340	PARTS,FAN DU 60-15	3	3	3
	41	2BL06960		STRAP RELEASE	1	1	1
	42	2BL16290		CUT WASHER 3	4	4	4
⊙	43	302GR34040	2GR34040	LABEL LEFT COVER A	1	1	1
⊙	44	302BL06101	2BL06101	LEFT COVER FEED	1	1	1
	45	2BL06340		SPRING FEED	2	2	2
	46	302BL06212	2BL06212	SHAFT FEED PULLEY	2	2	2
⊙	47	2BL16080		PULLEY FEED	4	4	4
	48	302BL14231	2BL14231	SHAFT CAM	1	1	1

SP	Ref. No.	Part.No.	Alternative.	Description	Quantity 120	230	240
	49	5MVM122DB003	2BM17920	BUSH POM /F0093 A4	1	1	1
⊙	50	36722860		GEAR 18	1	1	1
	51	302AR07541	2AR07541	RETAINING PIN,VERTICAL CONVEYING	1	1	1
	52	2BC06980		STOPPER 5	1	1	1
	53	2BL14240		CAM DLP	2	2	2
	54	2BL14410		SPRING CAM	2	2	2
	55	302BL14141	2BL14141	MOUNT CAM	2	2	2
	101	5MBTPB3006TW++R	B1A53060	BIND T.T SCREW(+) / M3 X 6 CRFREE S-T			
	102	5MBTPB3006PW++R	B1B63060	BIND T.T SCREW(+) / M3 X 6 CRFREE P-T			
	103	B1B03050		+BIND SCREW M3X05(TRIVALENT CHROMATI			
	104	5MBTPB3008TW++R	B1A53080	BIND T.T SCREW(+) / M3 X 8 CRFREE S-T			
	105	BAA63080		+TP TAP-TITE P SCREW M3X08			
	106	B1B03080		+BIND SCREW M3X08			
	107	B4A03100		+TP-A SCREW M3X10(TRIVALENT CHROMATI			
	108	5MBTPB3014TW++R	B1A53140	BIND T.T SCREW(+) / M3 X 14 CRFREE S-T			
	109	7BC00030A080H01	BC046150	WASHER M3X10X0.8T			

• Parts with "•" are component parts or sub-assemblies of the assembly appearing immediately above them.

• Parts with "⊙" indicates the spare parts.

• Parts with "• •" are component parts or sub-assembly with "•" appearing immediately above them.

www.drukparts.pl

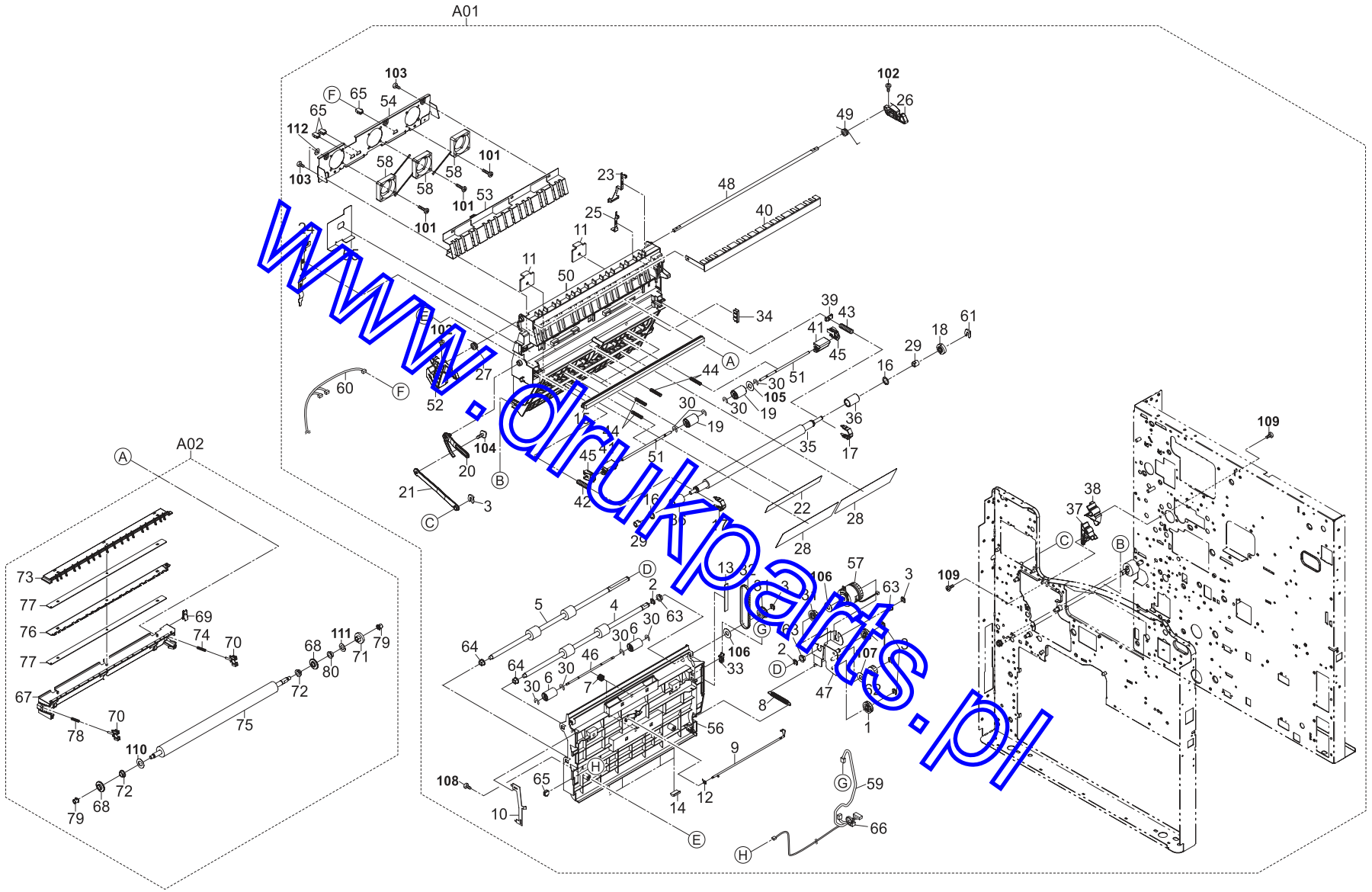
A01
A02
www.drukparts.pl

FIG. 7 Paper Conveying

2GZ/2G1

SP	Ref. No.	Part.No.	Alternative.	Description	Quantity 120	230	240
⊙	A01	302GR93140	2GR93140	FE-710	1	1	1
⊙	1	•2AL06110		GEAR 25	2	2	2
	2	•2BC06910		STOPPER 6	2	2	2
	3	•2BC06980		STOPPER 5	6	6	6
⊙	4	•2BL07020		ROLLER DU FEED UP	1	1	1
⊙	5	•2BL07030		ROLLER DU FEED LOW	1	1	1
⊙	6	•2BL07040		PULLEY DU	4	4	4
	7	•2BL07060		SPRING DU PULLEY	2	2	2
	8	•2BL07080		SPRING DU JOINT	1	1	1
⊙	9	•2BL07090		ACTUATOR DU	1	1	1
	10	•2BL07110		PLATE EARTH DU	1	1	1
	11	•2BL07120		PLATE JUT DU	2	2	2
⊙	12	•2BL07130		SPRING DU ACT.	1	1	1
	13	•2BL07140		FILM WIRE DU	1	1	1
	14	•2BL07150		GUIDE RIB DU	4	4	4
⊙	15	•2BL07950		UNDER CLEANER REGIST	1	1	1
	16	•2BL07970		CUT WASHER 10	2	2	2
	17	•2BL16030		STOPPER BUSH	2	2	2
⊙	18	•2BL16060		GEAR REGIST Z18	1	1	1
⊙	19	•2BL16080		PULLEY FEED	2	2	2
	20	•2BL16100		STRAP CONVEYING A	1	1	1
	21	•2BL16110		STRAP CONVEYING B	1	1	1
⊙	22	•2BL16130		GUIDE REGIST F	2	2	2
	23	•2BL16150		PLATE TRANS B	1	1	1
	24	•2BL16160		PLATE TRANS UNIT GND	1	1	1
	25	•2BL16170		PLATE SEPARATION B	1	1	1
⊙	26	•2BL16190		HOOK CONVEYING	1	1	1
	27	•2BL16200		SPRING CONVEYING	1	1	1
	28	•2BL16250		GUIDE FEED F	2	2	2
	29	•2BL16260		BUSHING REGIST	2	2	2
	30	•2BL16290		CUT WASHER 3	12	12	12
⊙	31	•2BL21230		PULLEY EXIT T30	2	2	2
⊙	32	•2BL21240		BELT EXIT P2M212	1	1	1
⊙	33	•2C927210		SENSOR 248NL1	1	1	1
	34	•2FG16010		PLATE MID FEED UNIT	1	1	1
⊙	35	•2FG16021		ROLLER REGIST	1	1	1
	36	•2FG16030		PULLEY REGIST	2	2	2
	37	•2FG16160		GUIDE ROLLER F	1	1	1
	38	•2FG16170		GUIDE ROLLER R	1	1	1
	39	•2FG16250		SPACER REGIST	1	1	1
	40	•2FG16270		SHEET CONVEYING	1	1	1
	41	•2FG16290		GUIDE FEED	2	2	2
⊙	42	•2FG16300		SPRING REGIST F	1	1	1
⊙	43	•2FG16310		SPRING REGIST R	1	1	1
	44	•2FG16320		SPRING FEED	4	4	4
	45	•2FG16330		HOLDER SHAFT	2	2	2
	46	•302BL07052	2BL07052	SHAFT DU PULLEY	2	2	2
	47	•302BL07071	2BL07071	JOINT DU	1	1	1
	48	•302BL16211	2BL16211	SHAFT CONVEYING	1	1	1
	49	•302BL16241	2BL16241	SPRING CONVEYING B	1	1	1
	50	•302FG16262	2FG16262	BASE CONVEYING A	1	1	1
⊙	51	•302FG16281	2FG16281	SHFAT FEED	2	2	2
⊙	52	•302GR24010	2GR24010	HANDLE CONVEYING	1	1	1
	53	•302GR24020	2GR24020	PLATE PAPER GUIDE	1	1	1
	54	•302GR24030	2GR24030	MOUNT CONVEYING FAN	1	1	1
	55	•302GR24040	2GR24040	FILM COVER WIRE	1	1	1
	56	•302GR29010	2GR29010	FRAME DU	1	1	1
⊙	57	•302GR44120	2GR44120	CLUTCH FEED	1	1	1
⊙	58	•302GR44250	2GR44250	FAN CONVEYING 42-10	3	3	3
	59	•302GR46420	2GR46420	WIRE DUPLEX	1	1	1
	60	•302GR46730	2GR46730	WIRE CONVEYING FAN	1	1	1
	61	•5MVX111DN003	2A806250	RING STOPPER /A-49 FEED A4	1	1	1
⊙	62	•66506630		GEAR 20,IDLE	1	1	1
	63	•67322230		BUSHING 8	3	3	3
	64	•73210450		BUSH, 6	2	2	2
	65	•7YCC02B1001+H01	YC014610	CONNECTOR	4	4	4
	66	•M2107240		BAND,KI-100(KITAGAWA)	1	1	1
⊙	A02	302GR93280	2GR93280	TR-710	1	1	1
	67	•2BL17010		HOUSING TRANSFER	1	1	1
⊙	68	•2BL17040		PULLEY TRANS ROLLER	2	2	2
	69	•2BL17050		PLATE TRANS UNIT	1	1	1
⊙	70	•2BL17060		BUSH TRANS ROLLER	2	2	2
⊙	71	•2BL17090		GEAR TRANS Z25H	1	1	1
	72	•2BL17170		BUSHING 8	2	2	2
	73	•2FG17010		HOLDER SEPARATION A	1	1	1
	74	•2FG17160		SPRING TRANS R	1	1	1
⊙	75	•302GR22010	2GR22010	ROLLER TRANSFER	1	1	1
	76	•302GR22020	2GR22020	BRUSH SEPARATION	1	1	1
	77	•302GR22030	2GR22030	SPACER SEPARATION	2	2	2
	78	•302GR22050	2GR22050	SPRING TRANSFER F	1	1	1
	79	•302GR22110	2GR22110	COLLAR TRANS ROLLER	2	2	2
	80	•75718040		BUSHING,CLEANING BLADE SHAFT	1	1	1
	101	5MBTPB3014TW++R	B1A53140	BIND T.T SCREW(+) / M3 X 14 CRFREE S-T			
	102	5MBSP43006NW++R	B4A03060	TP HEAD SCREW(+) / M3 X 6 DRFREE			
	103	5MBTPB3008PW++R	B1A63080	BIND T.T SCREW(+) / M3 X 8 CRFREE P-T			
	104	BAB63060		+TP TAP-TITE P SCREW M3X06			
	105	C2604080		PLAIN WASHER M4-8 (BRASS,N:)			
	106	C2808200		POLYESTER SLIDER WASHER 8X20X0.5T			
	107	5MBWK62955NN	C2892950	POLY SLIDER /M6.2X9.5X0.5T PLASTC			
	108	B1B03100		+BIND SCREW M3X10			
	109	5MBTPB3008TW++R	B1A53080	BIND T.T SCREW(+) / M3 X 8 CRFREE S-T			
	110	C2808200		POLYESTER SLIDER WASHER 8X20X0.5T			
	111	C2895150		SHIM 8.2X1.0T			
	112	7BC00030A080H01	BC046150	WASHER M3X10X0.8T			

• Parts with "•" are component parts or sub-assemblies of the assembly appearing immediately above them.

• Parts with "⊙" indicates the spare parts.

• Parts with "• •" are component parts or sub-assembly with "•" appearing immediately above them.

www.drukparts.pl

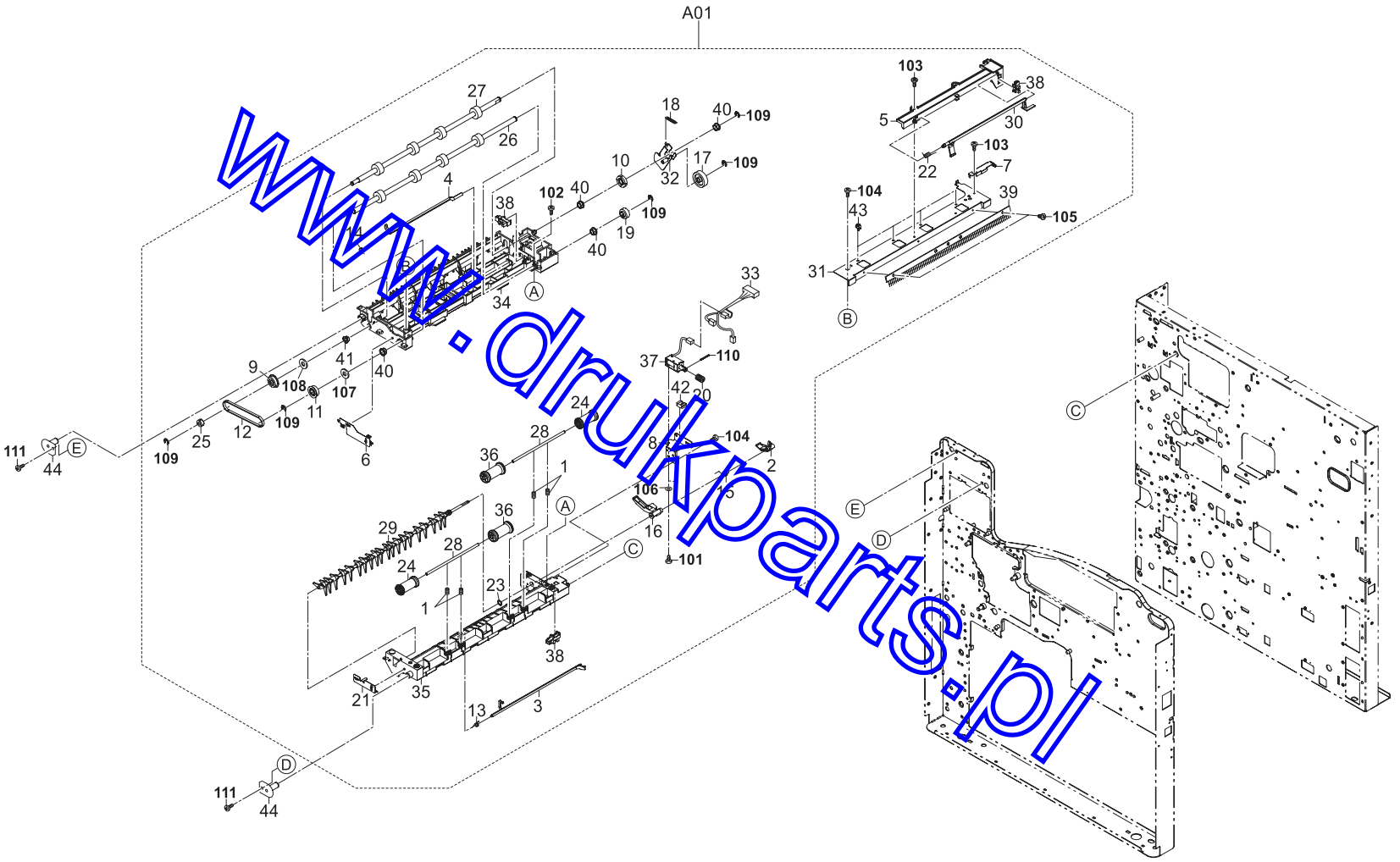

www.drukparts.pl

FIG. 8 Paper Exit

2GZ/2G1

SP	Ref. No.	Part.No.	Alternative.	Description	Quantity 120	230	240
⊙	A01	302G193050	2G193050	PARTS EXIT UNIT	1	1	1
	1	•2BL21070		SPRING EXIT PULLEY	4	4	4
	2	•2BL21100		LEVER GUIDE CHANGE	1	1	1
⊙	3	•2BL21120		ACTUATOR EXIT R	1	1	1
⊙	4	•2BL21130		ACTUATOR EXIT L	1	1	1
	5	•2BL21150		BKT EXIT FULL	1	1	1
	6	•2BL21170		PLATE EARTH EXIT F	1	1	1
	7	•2BL21180		PLATE EARTH EXIT R	1	1	1
	8	•2BL21190		BKT SOLENOID	1	1	1
⊙	9	•2BL21211		PULLEY ONEWAY T30	1	1	1
⊙	10	•2BL21220		GEAR EXIT Z19	1	1	1
⊙	11	•2BL21230		PULLEY EXIT T30	1	1	1
⊙	12	•2BL21240		BELT EXIT P2M212	1	1	1
	13	•2BL21250		SPRING ACTUATOR R	1	1	1
	14	•2BL21260		SPRING ACTUATOR L	1	1	1
	15	•2BL21270		SPRING FEED SHIFT	1	1	1
	16	•2BL21370		LEVER GUIDE CHANGE R	1	1	1
⊙	17	•2BL21390		GEAR EXIT JOINT Z68	1	1	1
	18	•2BL21400		SPRING EXIT JOINT	1	1	1
⊙	19	•2BL21430		GEAR EXIT Z20	1	1	1
⊙	20	•2BL21440		SPRING EXIT CHANGE	1	1	1
	21	•2BL21470		PLATE EARTH CHANGE	1	1	1
	22	•2BL21480		SPRING EXIT FULL	1	1	1
	23	•2BL21510		CUT WASHER 6	1	1	1
	24	•2BL21520		PULLEY EXIT C	2	2	2
	25	•2BL22580		COLLAR BELT	1	1	1
⊙	26	•302BL21021	2BL21021	ROLLER EXIT	1	1	1
⊙	27	•302BL21031	2BL21031	ROLLER FEED SHIFT	1	1	1
	28	•302BL21061	2BL21061	SHAFT EXIT PULLEY	2	2	2
⊙	29	•302BL21081	2BL21081	GUIDE EXIT CHANGE	1	1	1
	30	•302BL21141	2BL21141	ACTUATOR EXIT FULL	1	1	1
	31	•302BL21161	2BL21161	BKT DISCHARGER	1	1	1
	32	•302BL21201	2BL21201	JOINT EXIT	1	1	1
	33	•302G146070	2G146070	WIRE EJECT(P)	1	1	1
	34	•302GR28011	2GR28011	FRAME EXIT UP	1	1	1
	35	•302GR28020	2GR28020	FRAME EXIT LOW	1	1	1
	36	•302GR28060	2GR28060	PULLEY EXIT	2	2	2
⊙	37	•302GR44160	2GR44160	SOLENOID FEED SHIFT	1	1	1
⊙	38	•303BN27061	3BN27061	SWITCH,EJECT	3	3	3
⊙	39	•34821100		STATIC ELIMINATOR,EJECT	1	1	1
	40	•67322230		BUSHING 8	4	4	4
	41	•73210450		BUSH, 6	1	1	1
	42	•M2104390		EDGING,EDS-0607L(KITAGAWA)	1	1	1
	43	•M2105740		MINIATURE CLAMP,UAMS-05S-2	4	4	4
	44	302GR02860	2GR02860	PIN EXIT	2	2	2

SP	Ref. No.	Part.No.	Alternative.	Description	Quantity 120	230	240
	101	B1B00030		+BIND SCREW M2.6X03(TRIVARENT CHROMAT			
	102	5MBTPB3010PW++R	B1B63100	BIND T.T SCREW(+) / M3 X 10 CRFREE P-T			
	103	5MBTPB3006TW++R	B1A53060	BIND T.T SCREW(+) / M3 X 6 CRFREE S-T			
	104	5MBTPB3008PW++R	B1A63080	BIND T.T SCREW(+) / M3 X 8 CRFREE P-T			
	105	7BB009305H	BB046130	+FLAT HEAD SCREW M3X05 CRFREE			
	106	C2603080		PLAIN WASHER M3-8 (BRASS,N:)			
	107	C2808200		POLYESTER SLIDER WASHER 8X20X0.5T			
	108	C2891120		POLYESTER SLIDER WASHER 6.2X12X0.25T			
	109	D1A00500		STOP RING E-5(TRIVALENT CHROMATING)			
	110	5MBP2020WWLD	E1120200	SPRING PIN / M2 X 20 SUS-DP XX			
	111	B1B03050		+BIND SCREW M3X05(TRIVALENT CHROMATI			

• Parts with "•" are component parts or sub-assemblies of the assembly appearing immediately above them.

• Parts with "⊙" indicates the spare parts.

• Parts with "• •" are component parts or sub-assembly with "•" appearing immediately above them.

www.drukparts.pl

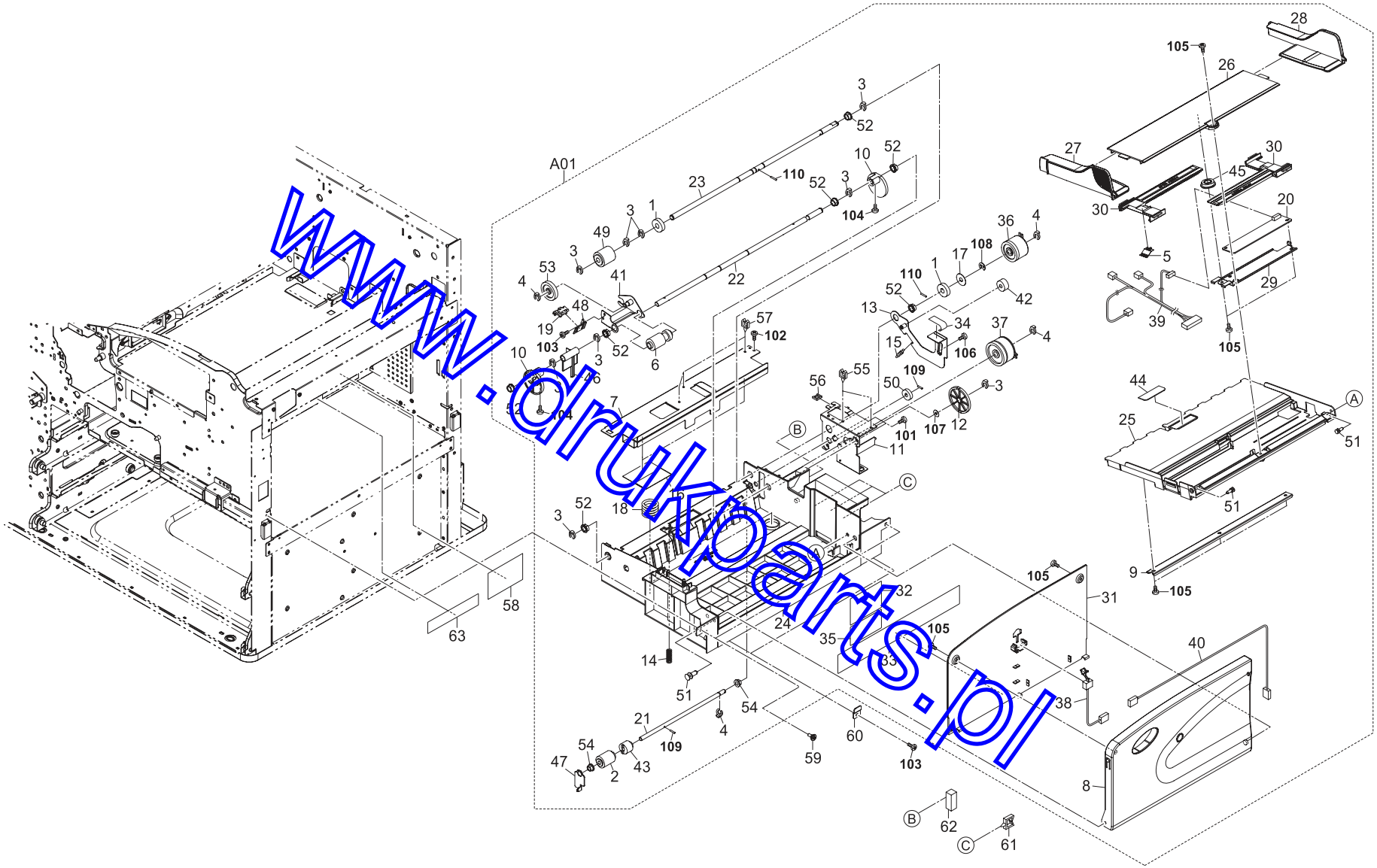

www.drukparts.pl

FIG. 9 Bypass Unit

2GZ/2G1

SP	Ref. No.	Part.No.	Alternative.	Description	Quantity 120	230	240
⊙	A01	302GR93110	2GR93110	PARTS BYPASS UNIT	1	1	1
⊙	1	•29415100	45729416	GEAR,TONER ROLLER	2	2	2
⊙	2	•2AR07230		PULLEY,SEPARATION	1	1	1
	3	•2BC06910		STOPPER 6	9	9	9
	4	•2BC06980		STOPPER 5	4	4	4
⊙	5	•2BC07860		TERMINAL,PAPER SIZE DETECTION	1	1	1
⊙	6	•2BJ06010		PULLEY FEED A	1	1	1
	7	•2BL06530		COVER BYPASSUNIT	1	1	1
⊙	8	•2BL06600		COVER BYPASSTRAY	1	1	1
	9	•2BL06650		STAY LIFTPLATE	1	1	1
	10	•2BL06680		CAM BYPASS	2	2	2
	11	•2BL06690		MOUNT,BYPASSDRIVE	1	1	1
⊙	12	•2BL06720		GEAR 35/15	1	1	1
	13	•2BL06850		JOINT RETARD	1	1	1
	14	•2BL06860		SPRING RETARD	1	1	1
	15	•2BL06870		SPRING JOINTRETARD	1	1	1
	16	•2BL06880		FILM BYPASS	2	2	2
	17	•2BL06990		STOPPER GEAR 8/40	1	1	1
	18	•2BL07860		SPRING BYPASS	2	2	2
⊙	19	•2C927210		SENSOR 248NL1	1	1	1
⊙	20	•2FG01020		SIZE DETECTION ASS'Y	1	1	1
	21	•302BL06751	2BL06751	SHAFT RETARD	1	1	1
	22	•302BL06761	2BL06761	SHAFT BYPASSCAM	1	1	1
	23	•302BL06771	2BL06771	SHAFT BYPASS	1	1	1
	24	•302GR08010	2GR08010	BASE BYPASS	1	1	1
	25	•302GR08021	2GR08021	PLATE LIFT BYPASS	1	1	1
	26	•302GR08030	2GR08030	COVER CURSOR	1	1	1
	27	•302GR08040	2GR08040	FRONT CURSOR BYPASS	1	1	1
	28	•302GR08050	2GR08050	REAR CURSOR BYPASS	1	1	1
	29	•302GR08060	2GR08060	MOUNT SIZE PWB	1	1	1
⊙	30	•302GR08070	2GR08070	RACK CURSOR	2	2	2
⊙	31	•302GR08080	2GR08080	TABLE BYPASS	1	1	1
⊙	32	•302GR34090	2GR34090	LABEL SET PAPER CAUTION A	1	1	1
⊙	33	•302GR34121	2GR34121	LABEL BYPASS SIZE	1	1	1
	34	•302GR34250	2GR34250	LABEL JAM A4	1	1	1
⊙	35	•302GR34260	2GR34260	LABEL SET PAPER CAUTION	1	1	1
⊙	36	•302GR44120	2GR44120	CLUTCH FEED	1	1	1
⊙	37	•302GR44130	2GR44130	CLUTCH FEED B	1	1	1
⊙	38	•302GR44280	2GR44280	SWITCH BYPASS SIZE	1	1	1
	39	•302GR46230	2GR46230	WIRE BYPASS UNIT	1	1	1
	40	•302GR46270	2GR46270	WIRE BYPASS TRAY	1	1	1
	41	•303A206131	3A206131	JOINT,BYPASS PICKUP	1	1	1
⊙	42	•33906160		GEAR 16,PAPER FEED	1	1	1
⊙	43	•33906430		TORQUE LIMITER,BYPASS	1	1	1
	44	•34806490		FRICTION PLATE,BYPASS LEADING FEED	1	1	1
⊙	45	•34907141		GEAR 18,CASSETTE	1	1	1
	46	•3A206100		ARM,BYPASS PE	1	1	1
	47	•3A206170		HOLDER,RETARD	1	1	1
	48	•3A206210		MOUNT,BYPASS PE SWITCH	1	1	1
⊙	49	•61706770		UPPER PULLEY,BYPASS	1	1	1
⊙	50	•66006810		GEAR,16 BYPASS PULLEY	1	1	1
	51	•66007310		PIN,CASSETTE WORK PLATE	3	3	3
	52	•67322230		BUSHING 8	7	7	7
⊙	53	•72321350		GEAR 30, FD EJECT IDLE	1	1	1
	54	•73210450		BUSH, 6	2	2	2
	55	•7YZM610007++H01	YZ023340	ASSCESS.SADDLE	2	2	2
	56	•M2104350		EDGING,EDS-0607M(KITAGAWA)	1	1	1
	57	•M2105210		MINI CLAMP,UAMS-02WL-0(KITAGAWA)	3	3	3
	58	302GR34170	2GR34170	LABEL BYPASS JAM R	1	1	1
	59	302BL04411	2BL04411	PIN COVER	2	2	2
	60	2BL06890		PLATE BYPASS HOLD	2	2	2
	61	7YZM610003++H01	YZ010250	ACCESS SADDLE	3	3	3
	62	302GR08090	2GR08090	CUSHION MPF A	1	1	1
	63	3A205010		LABEL,CAUTION GEAR	1	1	1
	101	5MBTPB3006PW++R	B1B63060	BIND T.T SCREW(+) / M3 X 6 CRFREE P-T			
	102	5MBTPB3006TW++R	B1A53060	BIND T.T SCREW(+) / M3 X 6 CRFREE S-T			
	103	B1B03050		+BIND SCREW M3X05(TRIVALENT CHROMAT			
	104	B1B03080		+BIND SCREW M3X08			
	105	BAA63080		+TP TAP-TITE P SCREW M3X08			
	106	BAB63060		+TP TAP-TITE P SCREW M3X06			
	107	C2895130		SHIM 8.2-0.5T			
	108	D1A00600		STOP RING E-6(TRIVALENT CHROMATING)			
	109	5MBP2010WXSP	E0020100	SPRING PIN / M2 X 10 S-BLK			
	110	5MBP2014WXSP	E0020140	SPRING PIN / M2 X 14 S-BLK			

• Parts with "•" are component parts or sub-assemblies of the assembly appearing immediately above them.

• Parts with "⊙" indicates the spare parts.

• Parts with "• •" are component parts or sub-assembly with "•" appearing immediately above them.

www.drukparts.pl

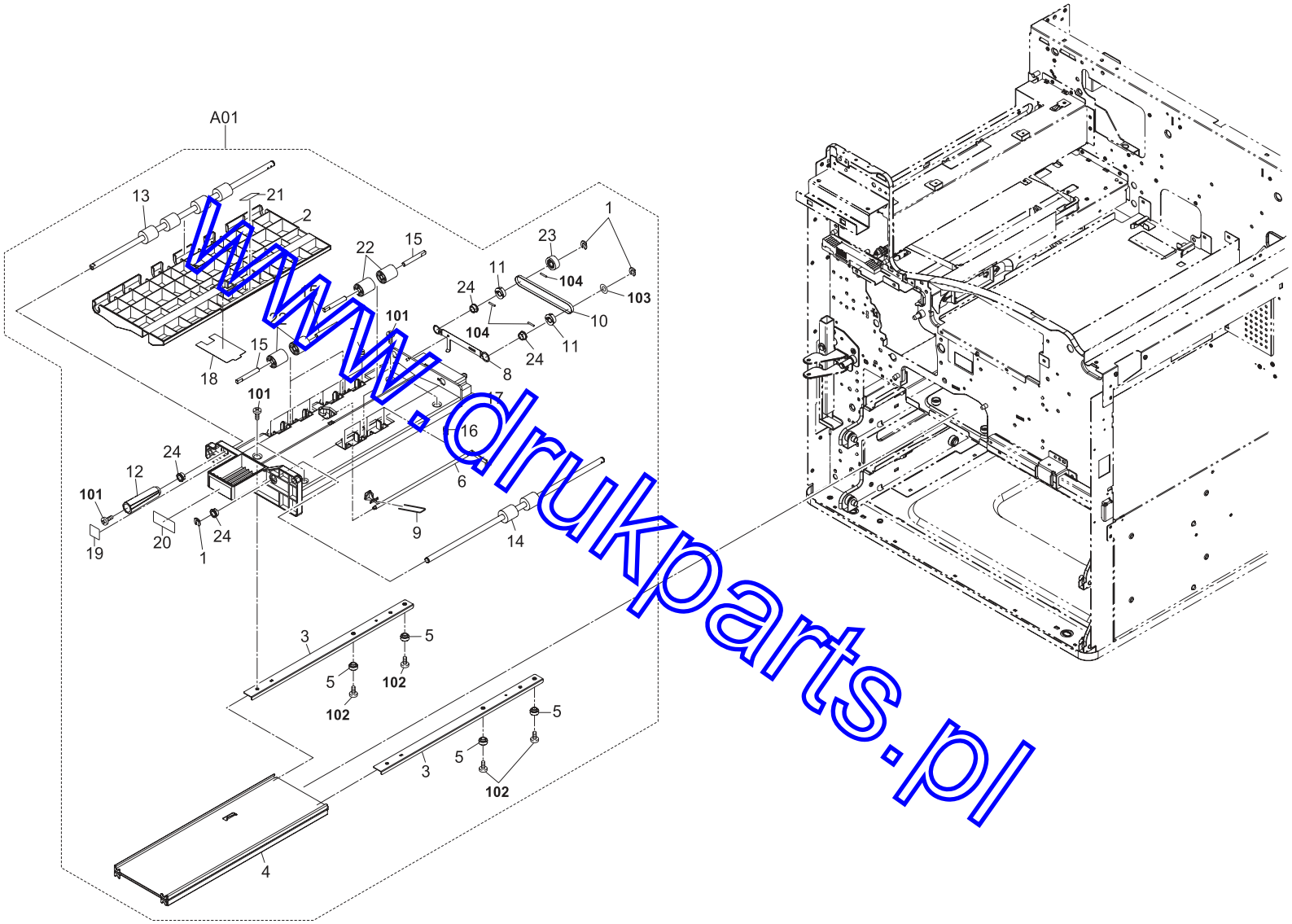

www.drukparts.pl

FIG. 10 Bypass Feed Unit

SP	Ref. No.	Part.No.	Alternative.	Description	Quantity 120	230	240
⊙	A01	302GR93120	2GR93120	PARTS BYPASS FEED UNIT	1	1	1
	1	•2BC06910		STOPPER 6	3	3	3
	2	•2BL06520		UPPERGUIDE BYPASS	1	1	1
	3	•2BL06570		MOUNT RAIL	2	2	2
	4	•2BL06580		RAIL BYPASS	1	1	1
	5	•2BL06590		PULLEY RAIL	4	4	4
⊙	6	•2BL06730		ACTUATOR BYPASSFEED	1	1	1
	7	•2BL06780		SPRING BYPASSFEED	8	8	8
	8	•2BL06790		GROUNDPLATE BYPASS	1	1	1
	9	•2BL06800		SPRING BYPASS	1	1	1
⊙	10	•2BL06810		BELT BYPASSFEED	1	1	1
⊙	11	•2BL06820		PULLEY25 BYPASSFEED	2	2	2
	12	•2BL06830		IDIAL BYPASSFEED	1	1	1
⊙	13	•302BL06541	2BL06541	ROLLER2.5 BYPASSFEED	1	1	1
⊙	14	•302BL06561	2BL06561	ROLLER4 BYPASSFEED	1	1	1
	15	•302BL06741	2BL06741	SHAFT BYPASSFEED	6	6	6
	16	•302GR06510	2GR06510	SPRING BYPASSFEED	4	4	4
	17	•302GR08100	2GR08100	BASE BYPASS FEED	1	1	1
	18	•302GR08110	2GR08110	FILM UPPER GUIDE	1	1	1
	19	•302GR34050	2GR34050	LABEL JAM A1	1	1	1
	20	•302GR34060	2GR34060	LABEL JAM A2	1	1	1
	21	•302GR34070	2GR34070	LABEL JAM A3	1	1	1
⊙	22	•33906660		RIGHT PULLEY,FEED	6	6	6
⊙	23	•36722860		GEAR 18	1	1	1
	24	•67322230		BUSHING 8	4	4	4

SP	Ref. No.	Part.No.	Alternative.	Description	Quantity 120	230	240
	101	5MBSP43006NW++R	B4A03060	TP HEAD SCREW(+) / M3 X 6 DRFREE			
	102	B4A03040		+TP-A SCREW M3X04(TRIVALENT CHROMATI			
	103	C2808200		POLYESTER SLIDER WASHER 8X20X0.5T			
	104	5MBP2012WXSP	E0020120	SPRING PIN / M2 X 12 S-BLK			

• Parts with "•" are component parts or sub-assemblies of the assembly appearing immediately above them.

• Parts with "⊙" indicates the spare parts.

• Parts with "• •" are component parts or sub-assembly with "•" appearing immediately above them.

www.drukparts.pl

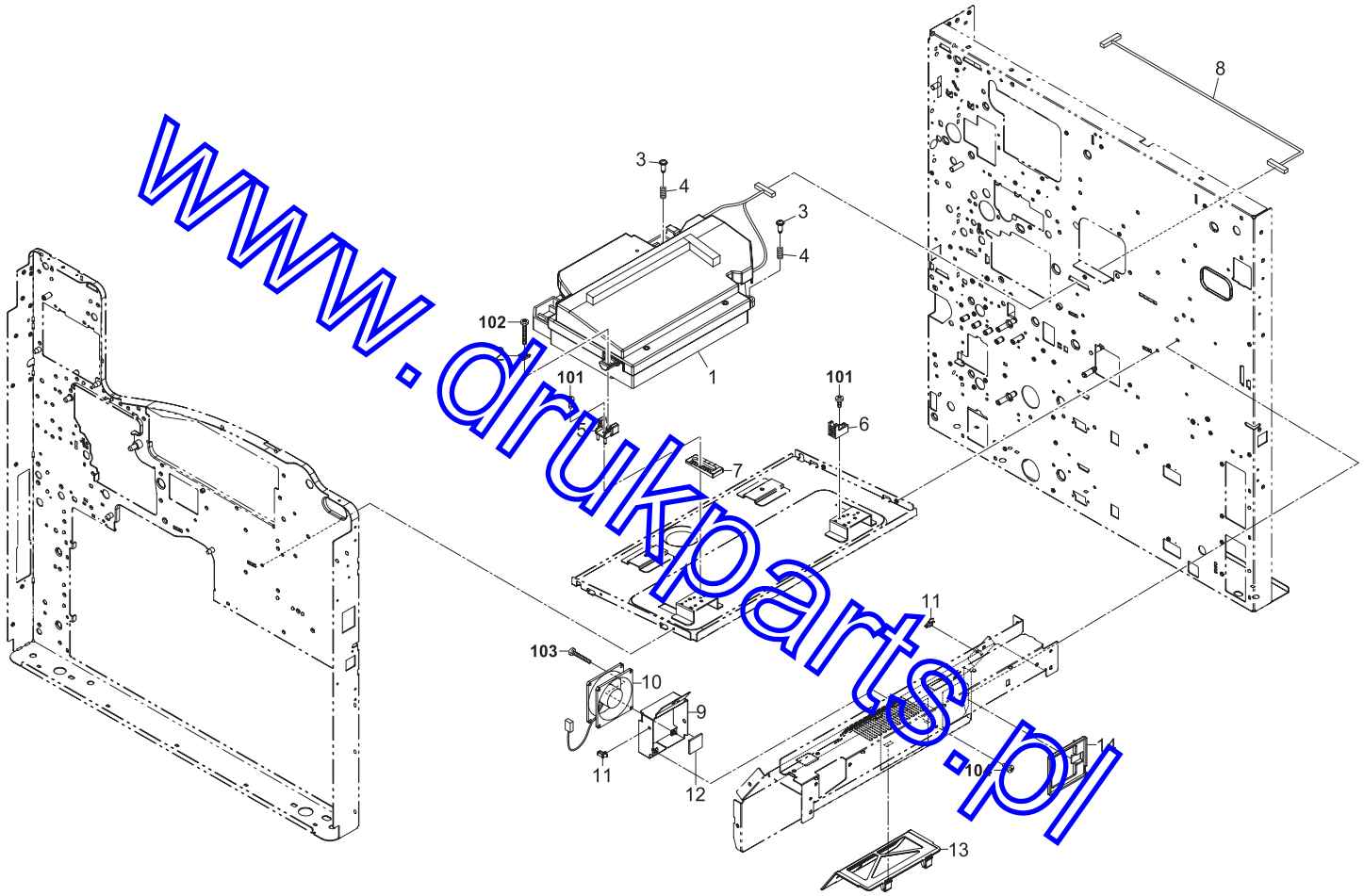

www.drukparts.pl

FIG. 11 LSU

SP	Ref. No.	Part.No.	Alternative.	Description	Quantity 120	230	240
⊙	1	302GR93090	2GR93090	LK-710	1	1	1
	2	2BL13120		FRONT MOUNT HOUSING	1	1	1
	3	302GR02830	2GR02830	PIN LSU FIXING	2	2	2
	4	2BL13290		SPRING FIX LSU	2	2	2
	5	2BL13070		FRONT ADJUSTING LSU	1	1	1
	6	2BL13060		REAR ADJUSTING LSU	1	1	1
	7	2BL13250		ADJUSTING PLT LSU	1	1	1
	8	302G146010	2G146010	WIRE LSU	1	1	1
	9	2BL02230		MOUNT FAN	1	1	1
⊙	10	302GR94250	2GR94250	PARTS,FAN LSU 60-25 SP	1	1	1
	11	7YZM610007++H01	YZ023340	ASSCESS.SADDLE	2	2	2
	12	2BL02240		SPONGE FAN	1	1	1
⊙	13	302GR94430	2GR94430	PARTS FILTER DUST F1 ASSY	1	1	1
⊙	14	302GR94440	2GR94440	PARTS FILTER DUST F2 ASSY	1	1	1

SP	Ref. No.	Part.No.	Alternative.	Description	Quantity 120	230	240
	101	B1B03100		+BIND SCREW M3X10			
	102	7BB000425H	BB045330	+BIND SCREW M4X25 CRFREE			
	103	7BB000430H	BB040770	+BIND SCREW M4X30 CRFREE			
	104	B1B03050		+BIND SCREW M3X05(TRIVALENT CHROMATI			

www.drukparts.pl

• Parts with "•" are component parts or sub-assemblies of the assembly appearing immediately above them.

• Parts with "⊙'" indicates the spare parts.

• Parts with "• •" are component parts or sub-assembly with "•" appearing immediately above them.

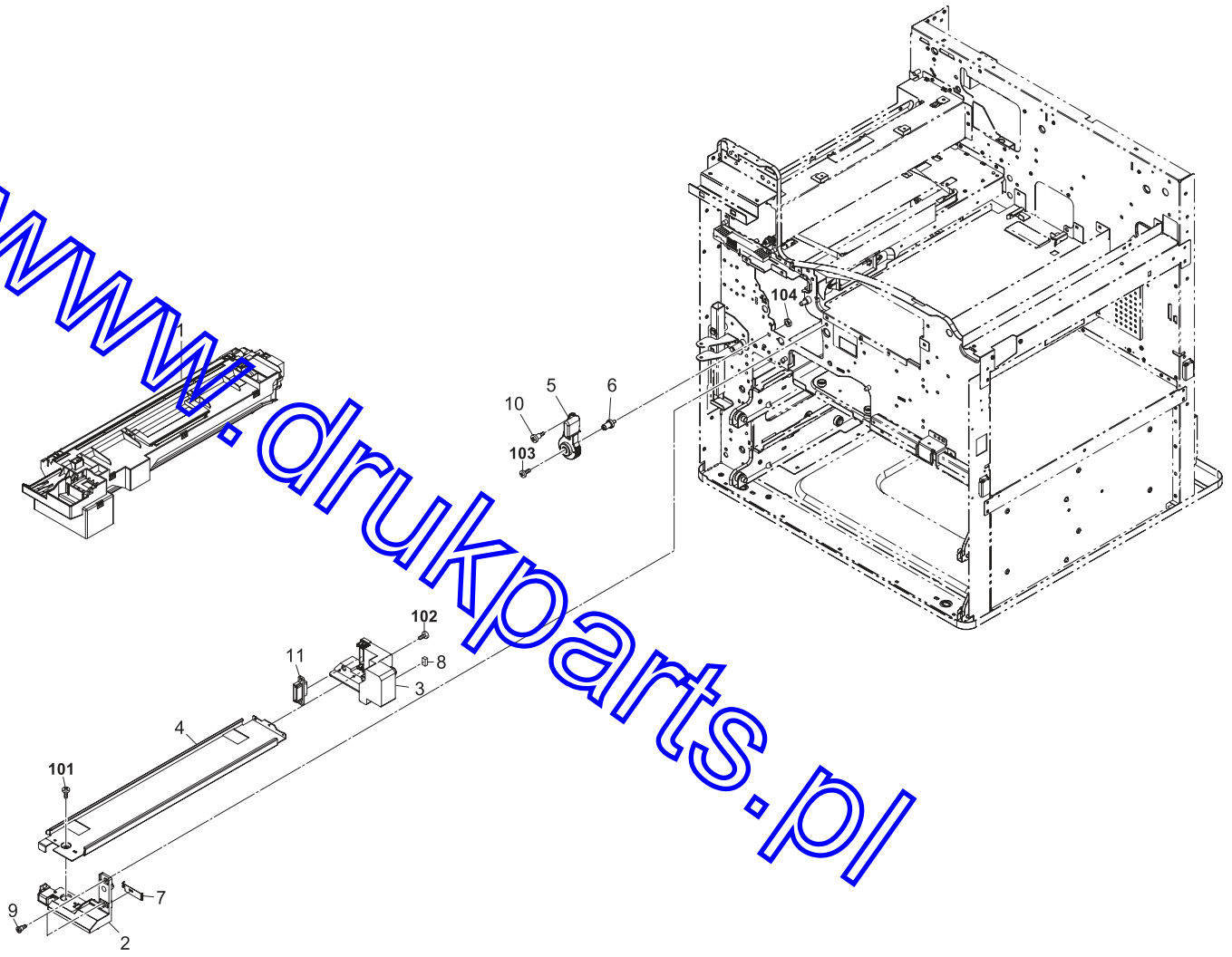

www.drukparts.pl

FIG. 12 Developer Unit

SP	Ref. No.	Part.No.	Alternative.	Description	Quantity 120	230	240
⊙	1	302G193040	2G193040	DV-710	1	1	1
	2	2BL14180		FRONT ARM RAIL	1	1	1
	3	2BL14190		REAR ARM RAIL	1	1	1
	4	2BL14200		RAIL DLP	1	1	1
	5	2BL14210		LEVER DLP	1	1	1
	6	2BL14220		PIN LEVER DLP	1	1	1
	7	2BL14350		GROUND PLATE RAIL	1	1	1
	8	2BL14480		SEAL WIRE	1	1	1
	9	302GR02850	2GR02850	PIN DLP RAIL	2	2	2
	10	3036006141	36006141	PIN,JAM REMOVEMENT DIAL	1	1	1
	11	7YCC10B1112+H01	YC046880	CONNECTOR	1	1	1

SP	Ref. No.	Part.No.	Alternative.	Description	Quantity 120	230	240
	101	5MBTPB3008PW++R	B1A63080	BIND T.T SCREW(+) / M3 X 8 CRFREE P-T			
	102	5MBTPB3006TW++R	B1A53060	BIND T.T SCREW(+) / M3 X 6 CRFREE S-T			
	103	5MBSP43006NW++R	B4A03060	TP HEAD SCREW(+) / M3 X 6 DRFREE			
	104	C1B14070		NUT SNM4(TRIVALENT CHROMATING)			

• Parts with "•" are component parts or sub-assemblies of the assembly appearing immediately above them.

• Parts with "⊙'" indicates the spare parts.

• Parts with "• •" are component parts or sub-assembly with "•" appearing immediately above them.

www.drukparts.pl

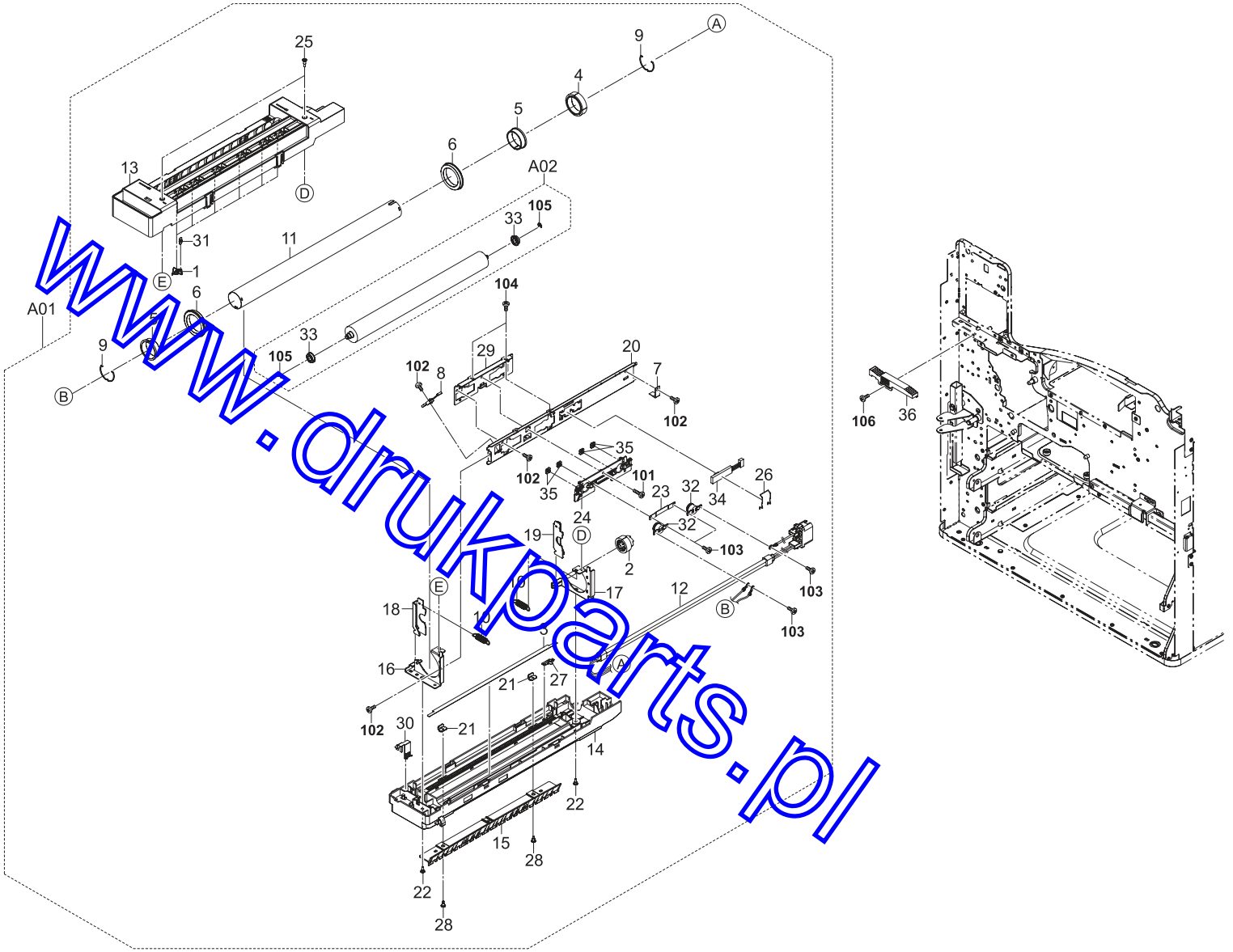

www.drukparts.pl

FIG. 13 Fuser Unit

SP	Ref. No.	Part.No.	Alternative.	Description	Quantity 120	230	240
⊙	A01	302G193010	2G193010	PARTS FUSER UNIT 120V	1		
⊙	A01	302G193020	2G193020	PARTS FUSER UNIT 230V		1	1
⊙	1	•2BL20080		CLAW HEAT ROLLER	6	6	6
⊙	2	•2BL20260		GEAR FIXING Z33	1	1	1
⊙	3	•2BL20330		STATIC ELIMINATOR PRESS	1	1	1
⊙	4	•2FG20070		GEAR 49 HEAT ROLLER	1	1	1
⊙	5	•2FG20190		BUSHING HEAT ROLLER	2	2	2
⊙	6	•2FG20230		BEARING HEAT ROLLER	2	2	2
⊙	7	•302F725430	2F725430	STATIC ELIMINATOR HEAT ROLLER	1	1	1
⊙	8	•302FG20211	2FG20211	THERMISTOR FIXING	1	1	1
	9	•302G125030	2G125030	STOPPER HEAT ROLLER	2	2	2
	10	•302G125070	2G125070	SPRING PRESSURE	2	2	2
⊙	11	•302G194020	2G194020	PARTS,ROLLER HEAT SP	1	1	1
⊙	12	•302G194030	2G194030	PARTS,HEATER 120 FUSER SP	1		
⊙	12	•302G194040	2G194040	PARTS,HEATER 230 FUSER SP		1	1
	13	•302GR25010	2GR25010	UPPER FRAME FUSER	1	1	1
	14	•302GR25021	2GR25021	LOWER FRAME FUSER	1	1	1
	15	•302GR25030	2GR25030	GUIDE CHUTE	1	1	1
	16	•302GR25040	2GR25040	FRONT FRAME FUSER	1	1	1
	17	•302GR25050	2GR25050	REAR FRAME FUSER	1	1	1
	18	•302GR25060	2GR25060	FRONT PRESSING PLATE	1	1	1
	19	•302GR25070	2GR25070	REAR PRESSING PLATE	1	1	1
	20	•302GR25080	2GR25080	STAY RIGHT FUSER		1	1
	21	•302GR25100	2GR25100	PLATE GUIDE CHUTE	2	2	2
	22	•302GR25160	2GR25160	PIN LOWER FRAME	2	2	2
	23	•302GR25180	2GR25180	PLATE THERMO CUT	1	1	1
	24	•302GR25200	2GR25200	HOLDER THERMO CUT		1	1
	25	•302GR25210	2GR25210	PIN UPPER FRAME	2	2	2
	26	•302GR25220	2GR25220	SPRING THERMISTOR	1	1	1
	27	•302GR25230	2GR25230	PLATE ELIMINATOR	1	1	1
	28	•302GR25240	2GR25240	PIN GUIDE CHUTE	2	2	2
	29	•302GR25250	2GR25250	MOUNT THERMO CUT HOLDER	1	1	1
	30	•302GR25270	2GR25270	GROUND PLATE FUSER	1	1	1
	31	•302GR25280	2GR25280	SPRING CLAW	6	6	6
⊙	32	•302GR25290	2GR25290	THERMOSTAT M FUSER	2	2	2
⊙	A02	•302GR94280	2GR94280	PARTS,ROLLER PRESS SP	1	1	1
	33	••2C920330		BEARING PRESSURE	2	2	2
⊙	34	•302GR94320	2GR94320	PARTS,THERMISTOR FUSER NC SP	1	1	1
	35	•5MMS111SL002	2BY20050	NUT FUSER A /FS-1800/3800 A4	4	4	4
	36	302GR02120	2GR02120	ADJUSTOR FUSER	1	1	1

SP	Ref. No.	Part.No.	Alternative.	Description	Quantity 120	230	240
	101	5MBTPB3012TW++R	B1B53120	BIND T.T SCREW(+) / M3 X 12 CRFREE S-T			
	102	5MBTPB3008TW++R	B1A53080	BIND T.T SCREW(+) / M3 X 8 CRFREE S-T			
	103	5MBSP43006NW++R	B4A03060	TP HEAD SCREW(+) / M3 X 6 DRFREE			
	104	5MBTPB3006TW++R	B1A53060	BIND T.T SCREW(+) / M3 X 6 CRFREE S-T			
	105	D1A00400		STOP RING E-4(TRIVALENT CHROMATING)			
	106	B4B03080		+TP-A SCREW M3X08(TRIVALENT CHROMATI			

• Parts with "•" are component parts or sub-assemblies of the assembly appearing immediately above them.

• Parts with "⊙" indicates the spare parts.

• Parts with "• •" are component parts or sub-assembly with "•" appearing immediately above them.

www.drukparts.pl

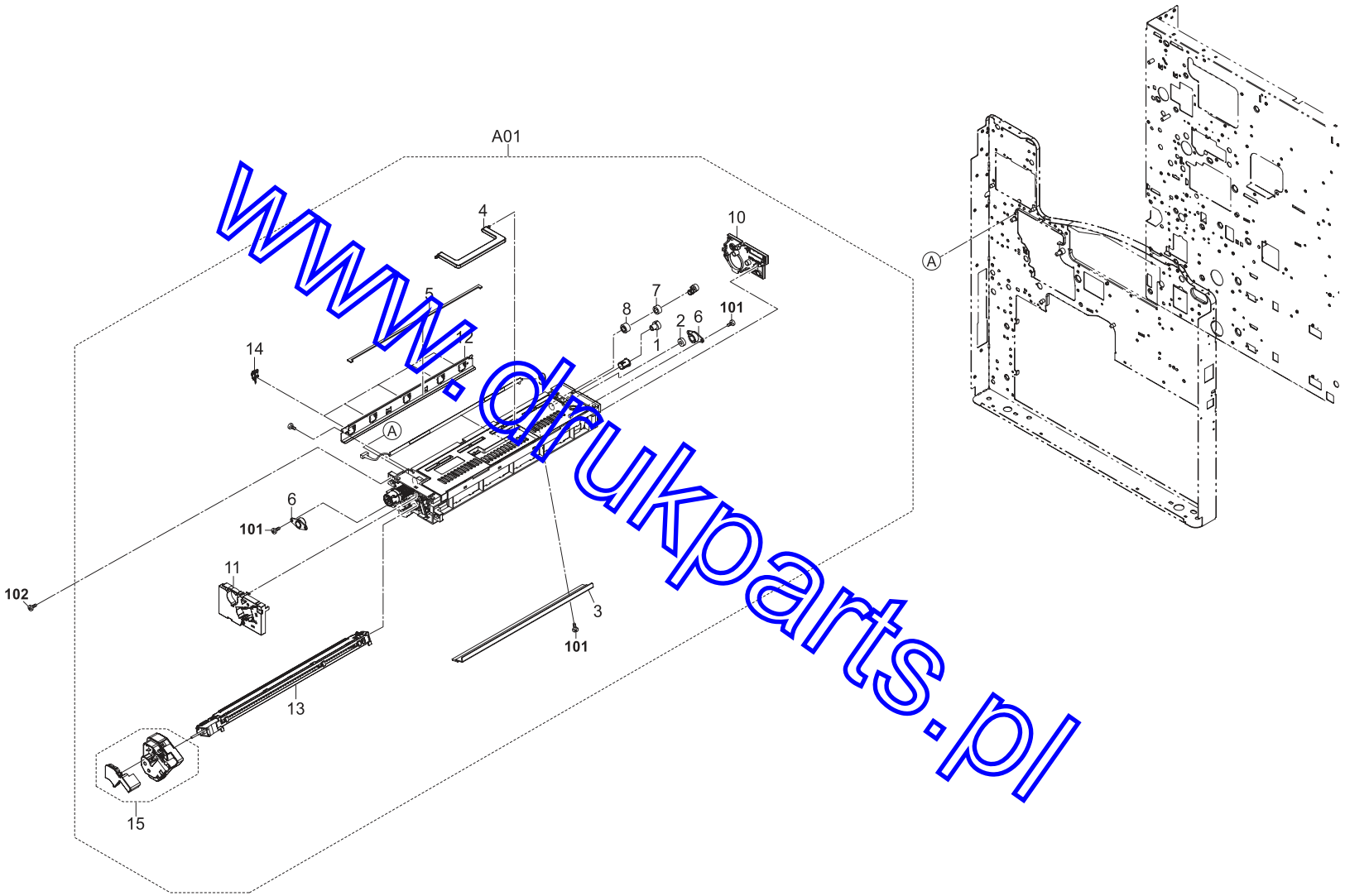

www.drukparts.pl

FIG. 14 Drum Unit

2GZ/2G1

SP	Ref. No.	Part.No.	Alternative.	Description	Quantity 120	230	240
⊙	A01	302G193030	2G193030	DK-710	1	1	1
	1	•2BL18160		GEAR SPIRAL 16	1	1	1
	2	•2BL18170		GEAR IDLE 15	1	1	1
⊙	3	•2BL18300		BLADE CLEANING	1	1	1
	4	•2BL18320		HANDLE DRUM	1	1	1
	5	•2BL18560		SPONGE LOWER SEAL	1	1	1
	6	•2BL18630		BUSHING DRUM A	2	2	2
⊙	7	•2BL18870		GEAR CL ROLLER 15	1	1	1
⊙	8	•2BL18880		GEAR CL ROLLER 16	1	1	1
⊙	9	•2BL93420		PARTS,LAMP CLEANING ASSY	1	1	1
	10	•302BL18031	2BL18031	REAR COVER DRUM	1	1	1
	11	•302GR12010	2GR12010	FRONT COVER DRUM	1	1	1
⊙	12	•302GR12110	2GR12110	LOWER SEAL CLEANING	1	1	1
⊙	13	•302GR93070	2GR93070	MC-710	1	1	1
⊙	14	•302GR93190	2GR93190	PARTS,CLAW SEPARATION ASSY	5	5	5
⊙	15	•302GR94450	2GR94450	PARTS MC,MOTOR ASSY	1	1	1

SP	Ref. No.	Part.No.	Alternative.	Description	Quantity 120	230	240
	101	5MBTPB3008PW++R	B1A63080	BIND T.T SCREW(+) / M3 X 8 CRFREE P-T			
	102	B1B03080		+BIND SCREW M3X08			

• Parts with "•" are component parts or sub-assemblies of the assembly appearing immediately above them.

• Parts with "⊙" indicates the spare parts.

• Parts with "• •" are component parts or sub-assembly with "•" appearing immediately above them.

www.drukparts.pl

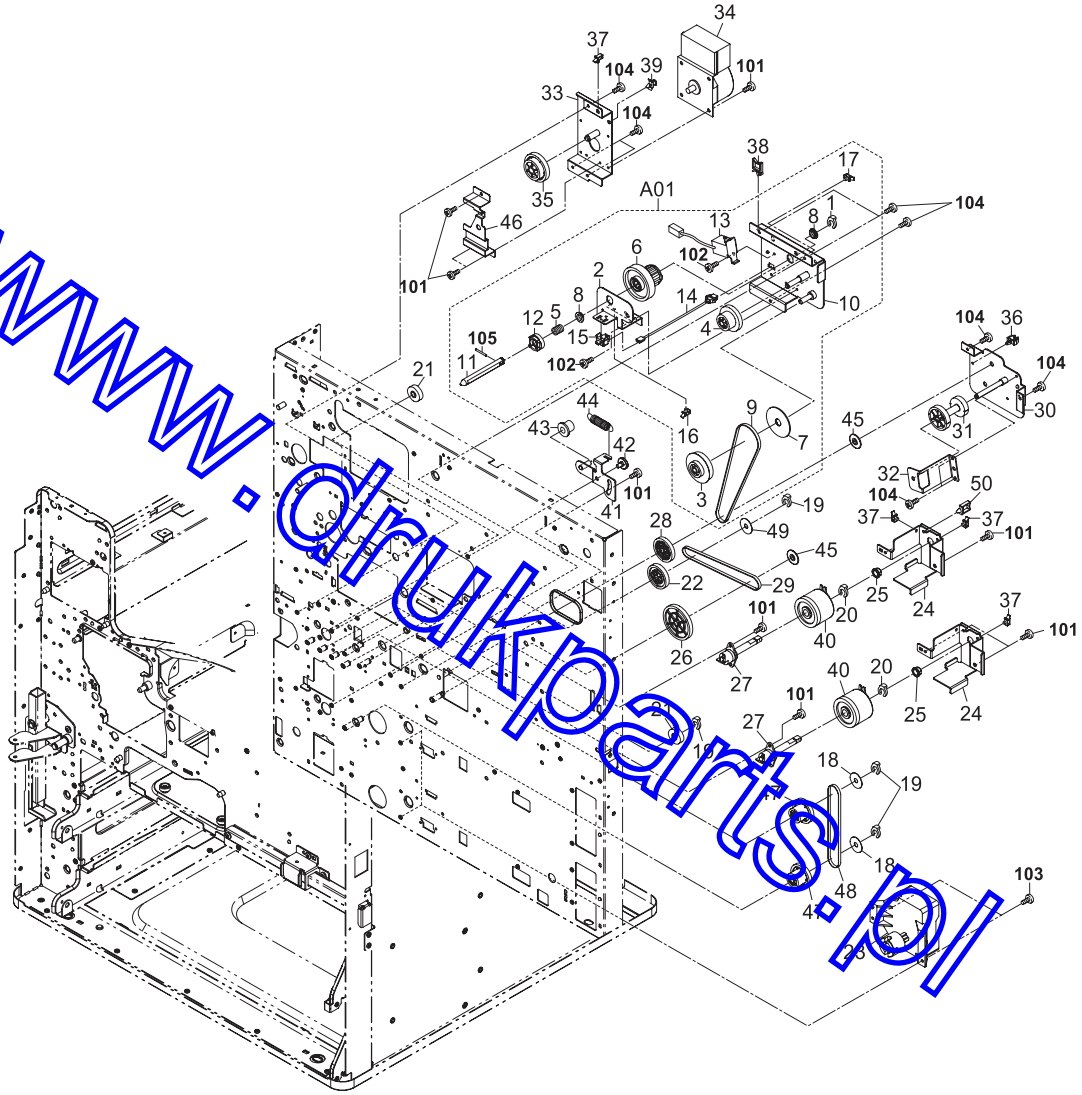

www.drukparts.pl

FIG. 15 Drive Unit I

2GZ/2G1

SP	Ref. No.	Part.No.	Alternative.	Description	Quantity 120	230	240
⊙	A01	302G193060	2G193060	PARTS CONT DRIVE A ASSY	1		
⊙	A01	302G193070	2G193070	PARTS CONT DRIVE E ASSY		1	1
	1	•2BC06910		STOPPER 6	1	1	1
	2	•2BL22450		PLATE DRIVE CONT.B	1	1	1
⊙	3	•2BL22480		GEAR Z24S-P40	1	1	1
⊙	4	•2BL22490		GEAR Z40S-Z25S	1	1	1
⊙	5	•2BL22510		SPRING DRIVE CONT.	1	1	1
⊙	6	•2BL22520		CLUTCH CONTAINER	1	1	1
⊙	7	•2BL22560		PULLEY CONT DRIVE	1	1	1
⊙	8	•2BL22570		BUSH DRIVE CONT 8	2	2	2
⊙	9	•2BL22590		BELT DRIVE CONTAINER	1	1	1
	10	•302BL22441	2BL22441	PLATE DRIVE CONT.A	1	1	1
	11	•302BL22461	2BL22461	SHAFT DRIVE CONT	1	1	1
⊙	12	•302G131010	2G131010	COUPLING CONT	1		
⊙	12	•302G131020	2G131020	COUPLING L CONT		1	1
⊙	13	•302GR44150	2GR44150	SOLENOID COVER	1	1	1
	14	•302GR46250	2GR46250	WIRE CONT SW	1	1	1
⊙	15	•66127010		SWITCH,COVER OPEN	1	1	1
	16	•7YZM610007++H01	YZ023340	ASSCESS.SADDLE	1	1	1
	17	•M2109410		WIRE SADDLE,YMW-13(KITAGAWA)	1	1	1
	18	2BL22580		COLLAR BELT	2	2	2
	19	5MVX111DN003	2A806250	RING STOPPER /A-49 FEED A4	6	6	6
	20	2BC06980		STOPPER 5	2	2	2
⊙	21	5MVG137DB025	2BL22740	GEAR M FEED Z25 /D1026 A4	4	4	4
⊙	22	2BL22530		GEAR FEED Z41S-P15	1	1	1
⊙	23	302GR44110	2GR44110	MOTOR LIFT	2	2	2
	24	2FG22090		BRACKET CLUTCH FEED	2	2	2
	25	67322230		BUSHING 8	2	2	2
⊙	26	2BL22540		GEAR Z60S-P20	1	1	1
⊙	27	2AR00170		PRIMARY PAPER FEED BUSHING ASS'Y	2	2	2
⊙	28	2BL22420		GEAR Z41S P18	1	1	1
⊙	29	2BL22400		BELT DRIVE MPF	1	1	1
	30	302BL22371	2BL22371	PLATE DRIVE MPF A	1	1	1
⊙	31	2BL22550		GEAR Z40S-Z32S	1	1	1
	32	2BL22380		PLATE DRIVE MPF B	1	1	1
	33	302FG22071	2FG22071	PLATE DRIVE FEED A	1	1	1
⊙	34	302GR94260	2GR94260	PARTS,MOTOR FEED SP	1	1	1
⊙	35	2BL22320		GEAR Z76H-Z35S	1	1	1
	36	7YZM610001++H01	YZ010230	ACCESS SADDLE	1	1	1
	37	7YZM610007++H01	YZ023340	ASSCESS.SADDLE	4	4	4
	38	7YZM610003++H01	YZ010250	ACCESS SADDLE	1	1	1
	39	7YZM510009++H01	YZ042790	ACCESS.SPACER	1	1	1
⊙	40	302GR44120	2GR44120	CLUTCH FEED	2	2	2
	41	302BL22811	2BL22811	PLATE TENSION A	1	1	1
	42	302GR02820	2GR02820	PIN DRIVE TENSION	1	1	1
	43	2BL22830		PULLEY TENSION	1	1	1
	44	2BL22820		SPRING PULLEY	1	1	1
	45	302BL22391	2BL22391	PULLEY MPF DRIVE	2	2	2
	46	2FG22080		PLATE DRIVE FEED B	1	1	1
⊙	47	2BL22330		GEAR Z41S-Z24S-P30	2	2	2
⊙	48	2BL22350		BELT DRIVE FEED	1	1	1
	49	302FG22120	2FG22120	COLLAR BELT DRIVE	1	1	1
	50	M2109350		WIRE SADDLE,YMC-15-0(KITAGAWA)	1	1	1
	101	B1B03050		+BIND SCREW M3X05(TRIVALENT CHROMATI			
	102	B1B03040		+BIND SCREW M3X04(TRIVALENT CHROMATI			
	103	5MBSP43006NW++R	B4A03060	TP HEAD SCREW(+) / M3 X 6 DRFREE			
	104	5MBTPB3006TW++R	B1A53060	BIND T.T SCREW(+) / M3 X 6 CRFREE S-T			
	105	E5120180		PARALLEL PIN H7A 2X18 SUS			

• Parts with "•" are component parts or sub-assemblies of the assembly appearing immediately above them.

• Parts with "⊙" indicates the spare parts.

• Parts with "• •" are component parts or sub-assembly with "•" appearing immediately above them.

www.drukparts.pl

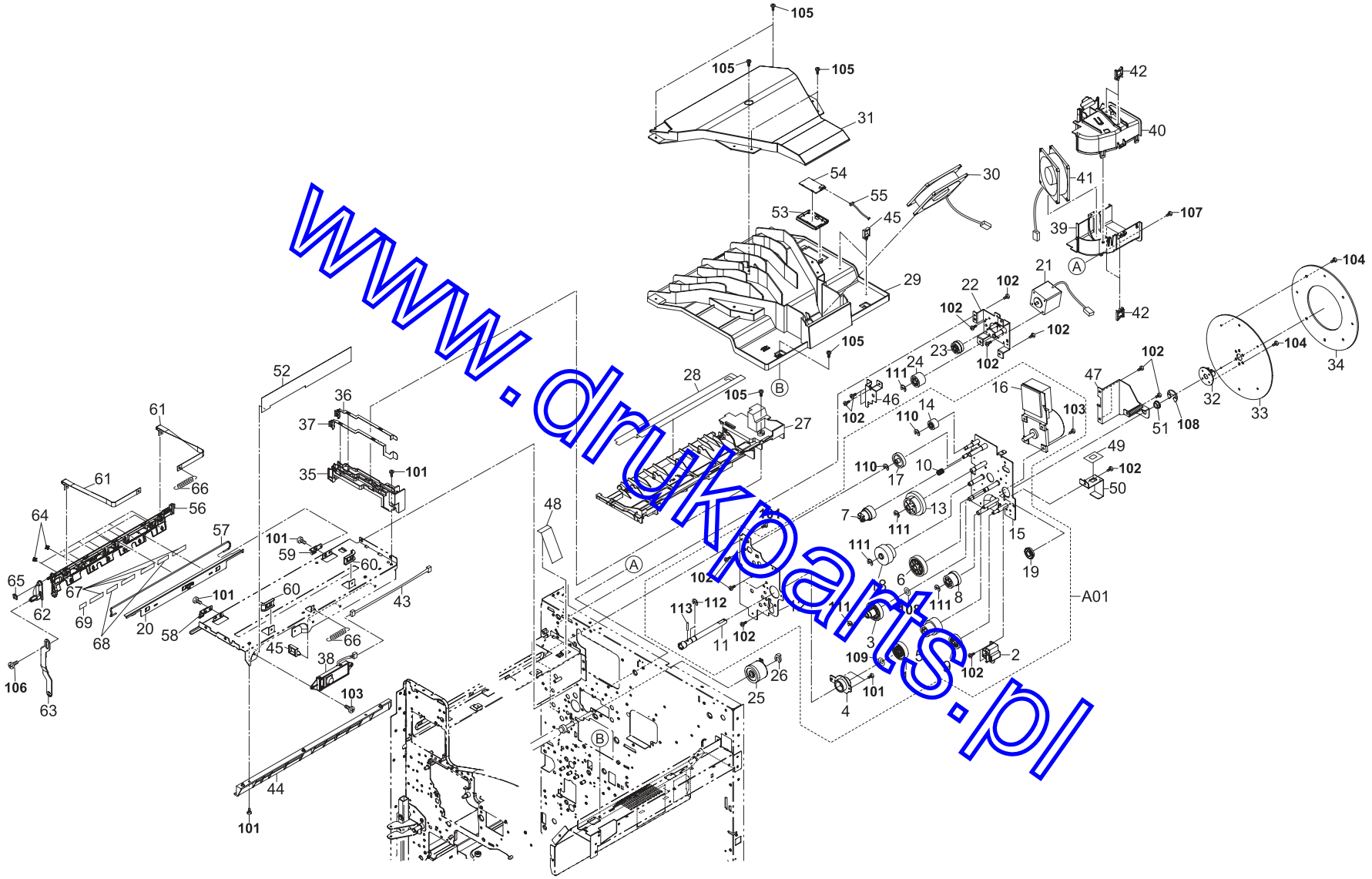

www.drukparts.pl

FIG. 16 Drivie Unit II

2GZ/2G1

SP	Ref. No.	Part.No.	Alternative.	Description	Quantity 120	230	240
⊙	A01	302GR93200	2GR93200	DR-710	1	1	1
	1	•2BL22050		GEAR DRUM Z70H	1	1	1
	2	•2BL22140		GUIDE DLP	1	1	1
	3	•2BL22160		GEAR DRUM Z76H-Z30H	1	1	1
	4	•2BL22170		PLATE GUIDE DRUM	1	1	1
	5	•2BL22180		GEAR Z37H-Z28H	1	1	1
	6	•2BL22190		GEAR Z50H	1	1	1
	7	•2BL22210		GEAR JOINT Z32S	1	1	1
	8	•2BL22220		GEAR Z36S-Z31H	1	1	1
	9	•2BL22230		GEAR Z34H	1	1	1
	10	•2BL22240		SPRING JOINT FUSER	1	1	1
	11	•2BL22840		SHAFT DRIVE DRUM FW	1	1	1
	12	•2FG22010		PLATE DRIVE FRONT	1	1	1
	13	•2FG22030		GEAR Z59H-Z14S	1	1	1
	14	•2FG22040		GEAR Z25S	1	1	1
	15	•302FG22021	2FG22021	PLATE DRIVE REAR	1	1	1
	16	•302GR44100	2GR44100	MOTOR MAIN	1	1	1
	17	•5MVG148DN027	2BL22770	GEAR Z37S /3062J0081 A4	1	1	1
	18	•5MVG169DN019	2BL22710	GEAR Z76H-Z35H /3062J0068 A3	1	1	1
	19	•G3169000		BEARING 6900ZZNR	1	1	1
	20	302GR02140	2GR02140	PLATE DRUM COVER	1	1	1
⊙	21	302GR44090	2GR44090	MOTOR EJECT	1	1	1
	22	302FG22051	2FG22051	PLATE DRIVE EXIT A	1	1	1
⊙	23	2BL22800		GEAR Z47S-Z28S	1	1	1
⊙	24	2BL22630		GEAR EXIT Z30S	1	1	1
⊙	25	302GR44140	2GR44140	CLUTCH REGISTRATION	1	1	1
	26	2BC06980		STOPPER 5	1	1	1
	27	302GR33010	2GR33010	DUCT UPPER DRUM	1	1	1
	28	2BL23120		COVER DUCT DRUM	1	1	1
	29	302GR33020	2GR33020	DUCT UPPER CONT	1	1	1
⊙	30	302GR94230	2GR94230	PARTS,FAN FIXING 80-25 SP	1	1	1
	31	2BL23040		LID DLP DUCT	1	1	1
	32	2BL22850		RETAINER FLYWHEEL	1	1	1
	33	2BL22860		FLYWHEEL 190	1	1	1
	34	2BL22870		WEIGHT 190	1	1	1
	35	2BL26150		MOUNT BASE TERMINAL	1	1	1
	36	2BL26160		PLATE TRANSFER A	1	1	1
	37	2BL26170		PLATE SEPARATION A	1	1	1
⊙	38	302GR01250	2GR01250	TONER SENSOR ASSY	1	1	1
	39	302BL23051	2BL23051	DUCT MAIN A	1	1	1
	40	2BL23060		DUCT MAIN B	1	1	1
⊙	41	302GR94240	2GR94240	PARTS,FAN LSU 90-25 SP	1	1	1
	42	7YZM610003++H01	YZ010250	ACCESS SADDLE	4	4	4
	43	302GR46210	2GR46210	WIRE CONTAINER	1	1	1
	44	2BL02220		RAIL DRUM R	1	1	1
	45	7YZM610007++H01	YZ023340	ASSCESS.SADDLE	5	5	5
	46	2FG22060		PLATE DRIVE EXIT B	1	1	1
	47	2BL22890		MOUNT FLYWHEEL	1	1	1
	48	2BL23100		FILM COOLING	1	1	1
	49	2BL22880		FILM BKT CLUTCH	1	1	1
	50	2BL22150		BRACKET CLUTCH	1	1	1
	51	213+4410	49021301	BUSH,CUTTER	1	1	1
	52	302GR02560	2GR02560	FILM SPRING DRUM COVER	1	1	1
	53	302GR33030	2GR33030	HOLDER RFID	1	1	1
	54	302F845040	2F845040	R/W MODULE 26X45	1	1	1
	55	302GR46590	2GR46590	WIRE RFID	1	1	1
	56	302GR02011	2GR02011	COVER DRUM A	1	1	1
	57	302GR02020	2GR02020	SHAFT DRUM COVER	1	1	1
	58	302GR02030	2GR02030	HOLDER SHAFT F	1	1	1
	59	302GR02040	2GR02040	HOLDER SHAFT R	1	1	1
	60	302GR02050	2GR02050	GUIDE STRAP	2	2	2
	61	302GR02060	2GR02060	STRAP DRUM COVER	2	2	2
	62	302GR02070	2GR02070	ARM DRUM COVER A	1	1	1
	63	302GR02080	2GR02080	ARM DRUM COVER B	1	1	1
	64	2A118370		PULLEY,DRUM SEPARATION	11	11	11
	65	5MVX111DN007	2BT11070	STOPPER 3 /2BT1107 A4	1	1	1
	66	302GR02090	2GR02090	SPRING DRUM COVER	2	2	2
	67	302GR02150	2GR02150	CUSHION DRUM COVER B	4	4	4
	68	302GR02160	2GR02160	CUSHION DRUM COVER C	2	2	2
	69	302GR02170	2GR02170	CUSHION DRUM COVER D	1	1	1
	101	5MBTPB3006TW++R	B1A53060	BIND T.T SCREW(+) / M3 X 6 CRFREE S-T			
	102	B1B03050		+BIND SCREW M3X05(TRIVALENT CHROMAT			
	103	B4B03050		+TP-A SCREW M3X05(TRIVALENT CHROMATI			
	104	B1B04060		+BIND SCREW M4X06(TRIVALENT CHROMAT			
	105	5MBTPB3008PW++R	B1A63080	BIND T.T SCREW(+) / M3 X 8 CRFREE P-T			
	106	B4A03080		+TP TAP-TITE P SCREW M3X08			
	107	5MBSP3006NW++R	B4A03060	TP HEAD SCREW(+) / M3 X 6 DRFREE			
	108	C2990130		SHIM 8.2-0.5T			
	109	C2990110		SHIM,10.2-0.25T			
	110	D1A00500		STOP RING E-5(TRIVALENT CHROMATING)			
	111	D1A00700		STOP RING E-7(TRIVALENT CHROMATING)			
	112	7BD108080++H01	B1042930	STOP RING 8.0X0.8T			
	113	E5130180		SPRING PIN H7A 3X18 SUS			

• Parts with "•" are component parts or sub-assemblies of the assembly appearing immediately above them.

• Parts with "⊙'" indicates the spare parts.

• Parts with "• •" are component parts or sub-assembly with "•" appearing immediately above them.

www.drukparts.pl

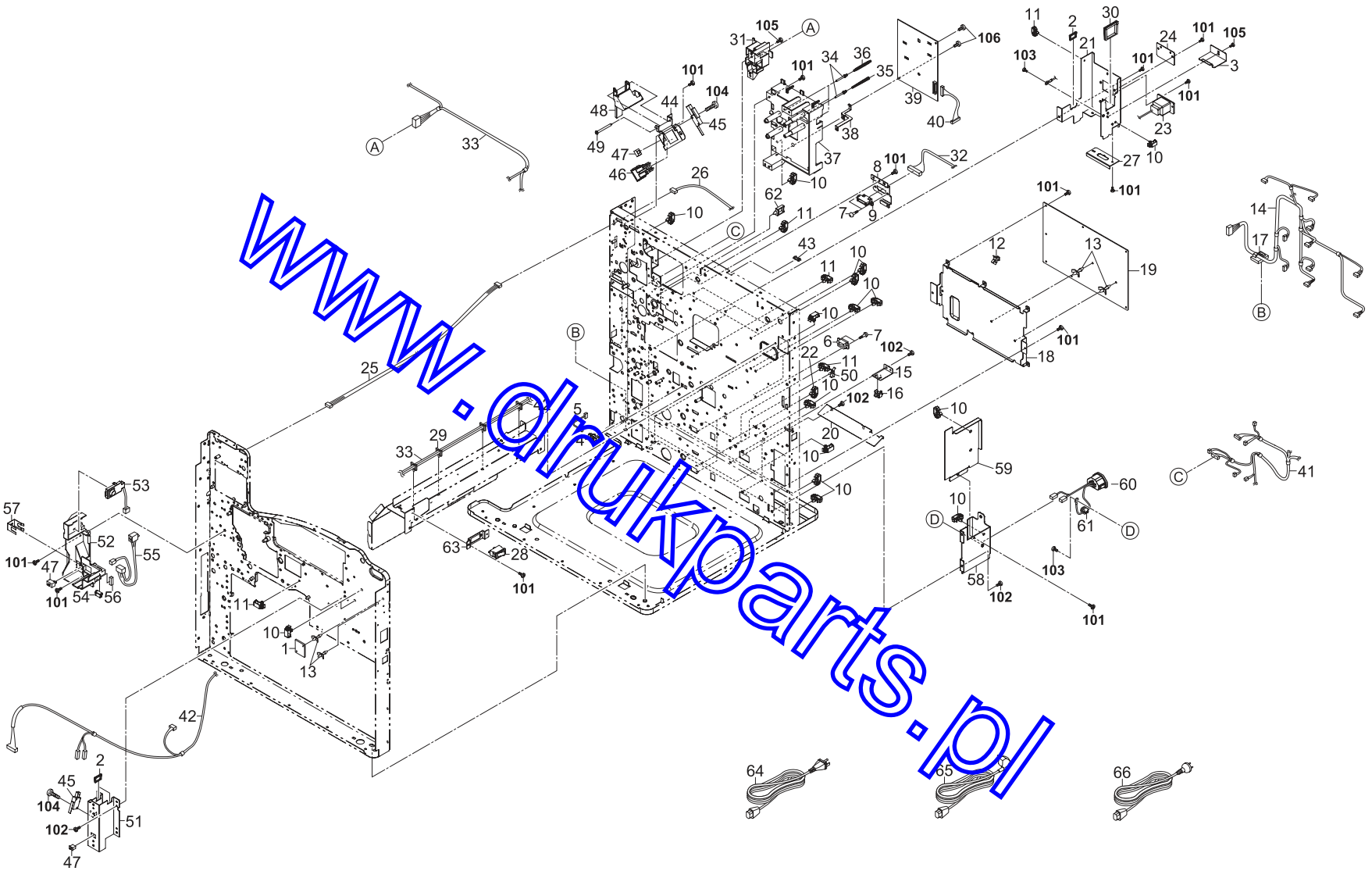
www.drukparts.pl

FIG. 17 Electrical Components I

2GZ/2G1

SP	Ref. No.	Part.No.	Alternative.	Description	Quantity 120	230	240
⊙	1	2BM27890		HUMIDITY SENSOR	1	1	1
	2	M2104250		EDGING,EDS-17L(KITAGAWA)	3	3	3
	3	302GR39190	2GR39190	COVER CONN	1	1	1
⊙	4	2C927210		SENSOR 248NL1	1	1	1
	5	302GR46300	2GR46300	WIRE BYPASS FEED PI	1	1	1
⊙	6	7YCC08B2046+H02	YC026130	CONNECTOR	2	2	2
	7	3033927451	33927451	RETAINING PIN,DRAWER	6	6	6
	8	2BL26200		MOUNT DRUM DRAWER	1	1	1
	9	7YCC10B1112+H01	YC046880	CONNECTOR	1	1	1
	10	7YZM610003++H01	YZ010250	ACCESS SADDLE	22	22	22
	11	7YZM610007++H01	YZ023340	ASSCESS.SADDLE	5	5	5
	12	7YZM510009++H01	YZ042790	ACCESS SPACER	1	1	1
	13	7YZM510007++H01	YZ042780	ACCESS SPACER	4	4	4
	14	302G146090	2G146090	WIRE,PAPER FEED(P)	1	1	1
	15	302FG07050	2FG07050	MOUNT,CASSETTE SWITCH	2	2	2
⊙	16	66127010		SWITCH,COVER OPEN	2	2	2
	17	M2105910		CLAMP,CKN-07(KITAGAWA)	1	1	1
	18	302GR39081	2GR39081	MOUNT POWER P.B.	1	1	1
⊙	19	302G145010	2G145010	UNIT LOW VOLTAGE 100	1		
⊙	19	302G145020	2G145020	UNIT LOW VOLTAGE 200		1	1
	20	2BJ26210		SHIELD SUBWIRE	1	1	1
	21	302GR39090	2GR39090	MOUNT OPTION I/F	1	1	1
	22	7YZM610001++H01	YZ010230	ACCESS SADDLE	2	2	2
	23	302GR46160	2GR46160	WIRE FINISHER SOCKET	1	1	1
	24	302FB26290	2FB26290	LID VENDOR	1	1	1
	25	302G146050	2G146050	WIRE OPE INNER	1	1	1
	26	302G146080	2G146080	WIRE OPE REAR	1	1	1
	27	2AR26340		MOUNT,DECK CONNECTOR	1	1	1
⊙	28	7SC010101+++H01	SC023350	SW.SEESAW	1	1	1
	29	7YZM610002++H01	YZ010240	ACCESS SADDLE	4	4	4
	30	M2104280		EDGING,EDS-25L(KITAGAWA)	1	1	1
	31	2BL26290		MOUNT FIXING DRAWER	1	1	1
	32	302G146140	2G146140	WIRE DRAWER(P)	1	1	1
	33	302G146150	2G146150	WIRE PRIMARY(P)	1	1	1
	34	302BL26061	2BL26061	PIN TERMINAL	4	4	4
	35	2BL26070		SPRING TERMINAL	1	1	1
	36	2BL26270		SPRING TERMINAL T	3	3	3
	37	302BL26051	2BL26051	CASE HIGH VOLTAGE	1	1	1
	38	2BL26080		GROUND PLATE HV	1	1	1
⊙	39	302GR45031	2GR45031	HVU	1	1	1
	40	302G146130	2G146130	WIRE HIGH VOLTAGE(P)	1	1	1
	41	302G146100	2G146100	WIRE MOTOR(P)	1	1	1
	42	302G146120	2G146120	WIRE FRONT(P)	1	1	1
	43	M2104210		EDGING,EDS-2	1	1	1
	44	2BL26110		LEFT MOUNT I/L	1	1	1
⊙	45	2FB27160		INTER LOCK SWITCH	2	2	2
⊙	46	2AR27040		SWITCH,INTERLOCK	1	1	1
⊙	47	35927420		SWITCH,SIZE	3	3	3
	48	2BL26120		LEFT WORK PLATE I/L	1	1	1
	49	302BL26281	2BL26281	SHAFT I/L	1	1	1
	50	M2109350		WIRE SADDLE,YMC-15-0(KITAGAWA)	1	1	1
	51	2BL04060		FRONT MOUNT COVER	1	1	1
	52	302GR04330	2GR04330	INNER LEFT COVER	1	1	1
⊙	53	302GR01190	2GR01190	TONER DETECTION ASS'Y	1	1	1
	54	7YCC05B1106+H01	YC047310	CONNECTOR	1	1	1
	55	302GR46290	2GR46290	WIRE TONER DISPOSAL	1	1	1
	56	2BL04460		SPACER WIRE	1	1	1
	57	2BL04450		GROUND PLATE INNER L	1	1	1
	58	302FG26102	2FG26102	MOUNT INLET A	1	1	1
	59	302G139100	2G139100	MOUNT INLET B	1	1	1
	60	302GR01240	2GR01240	INLET ASS'Y	1	1	1
	61	7YBCP8P8E001H01	YB020910	FERRITE CORE	1	1	1
	62	M2105740		MINIATURE CLAMP,UAMS-05S-2	1	1	1
	63	302GR39120	2GR39120	MOUNT MAIN SW	1	1	1
	64	3019527401	19527401	POWER CORD(120)	1		
	65	2AR27800		POWER CORD(230)		1	
	66	3029927232	29927232	POWER CODE AS(240)			1
	101	5MBTPB3006TW++R	B1A53060	BIND T.T SCREW(+) / M3 X 6 CRFREE S-T			
	102	B1B03050		+BIND SCREW M3X05(TRIVALENT CHROMAT			
	103	B9604060		GROUNDING SCREW M4X6 (BRASS,N;)			
	104	7BB000314H	BB023710	+BIND SCREW M3X14			
	105	5MBSP43006NW++R	B4A03060	TP HEAD SCREW(+) / M3 X 6 DRFREE			
	106	5MBTPB3008PW++R	B1A63080	BIND T.T SCREW(+) / M3 X 8 CRFREE P-T			

• Parts with "•" are component parts or sub-assemblies of the assembly appearing immediately above them.

• Parts with "⊙'" indicates the spare parts.

• Parts with "• •" are component parts or sub-assembly with "•" appearing immediately above them.

www.drukparts.pl

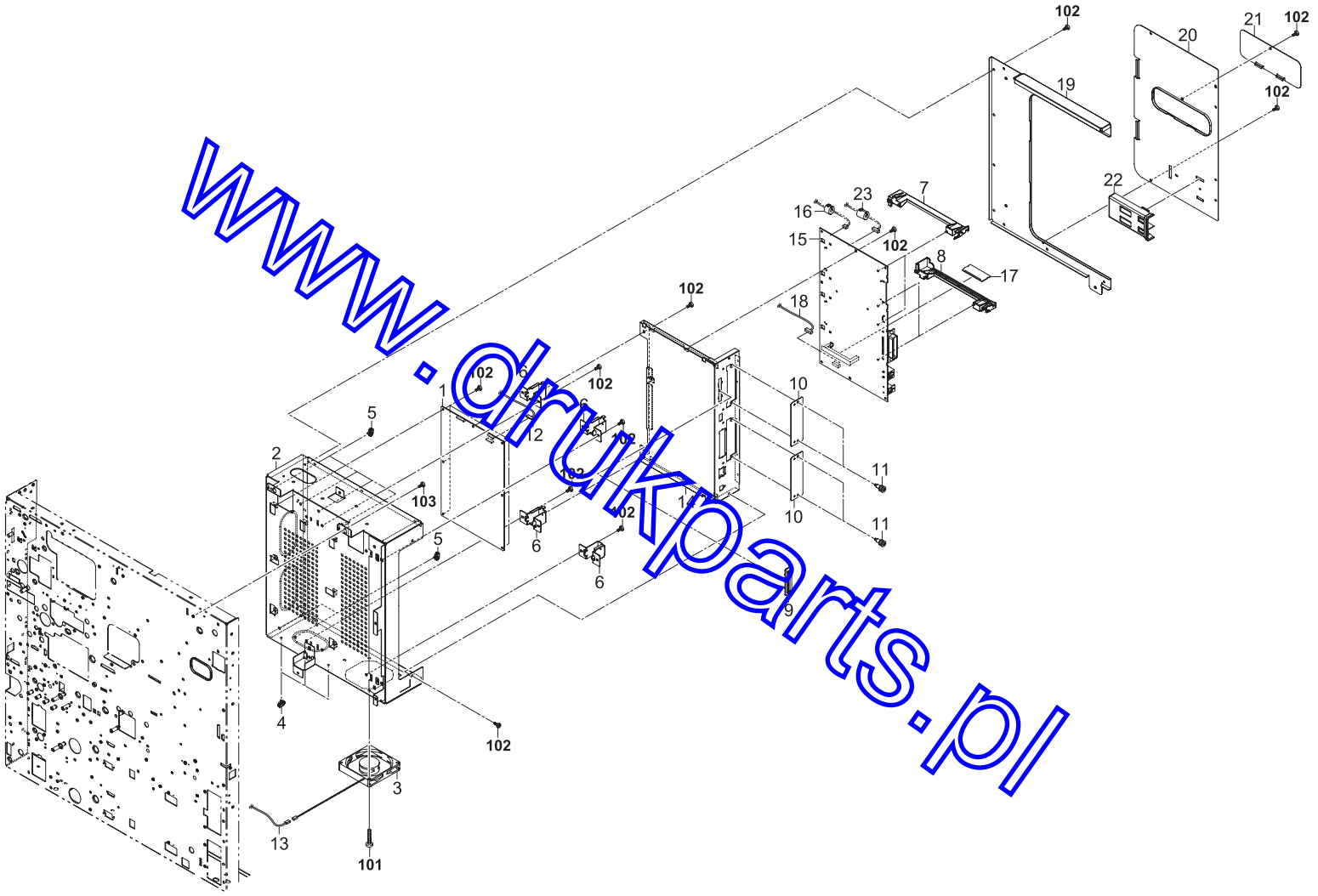

www.drukparts.pl

FIG. 18 Electrical Components II

2GZ/2G1

SP	Ref. No.	Part.No.	Alternative.	Description	Quantity 120	230	240
⊙	1	302G194060	2G194060	PARTS,PWB ENGINE ASS'Y SP	1	1	1
	2	302G139010	2G139010	BOX MOUNT PWB	1	1	1
⊙	3	302GR94220	2GR94220	PARTS,FAN CONTROLLER 80-15 SP	1	1	1
	4	7YZM610007++H01	YZ023340	ASSCESS.SADDLE	3	3	3
	5	7YZM610003++H01	YZ010250	ACCESS SADDLE	6	6	6
	6	302G139090	2G139090	HOLDER PWB	4	4	4
	7	5MVB743SL004	2BL26210	RAIL OPTION A /B-05 CONT BOX A2	2	2	2
	8	5MVB743SL005	2BL26220	RAIL OPTION B /B-05 CONT BOX A2	2	2	2
	9	5MVX621SH003	2BM26020	GUID CF CARD /45252C0006 A4	1	1	1
	10	303BH26021	3BH26021	PLATE,OPTION	2	2	2
	11	5MMT263SN012++R	2D903100	SCREW OP / M3 X 8 CRFREE A4	4	4	4
	12	302G146020	2G146020	WIRE MAIN-ENGINE PWB	1	1	1
	13	302GR46630	2GR46630	WIRE FAN	1	1	1
	14	302G139020	2G139020	MOUNT MAIN PWB	1	1	1
⊙	15	302GZ47010	2GZ47010	MAIN PWB ASS'Y (400ppm)	1	1	1
⊙	15	302G147010	2G147010	MAIN PWB ASS'Y (600ppm)	1	1	1
	16	2FG27640		CORE ATEC 16-8-26	1	1	1
⊙	17	302G101040	2G101040	CODE DIMM PWB ASS'Y WITH SOFTWARE	1	1	1
	18	302G146030	2G146030	WIRE POWER-MAIN	1	1	1
	19	302G139030	2G139030	LID BOX MOUNT	1	1	1
	20	302G139040	2G139040	LID MAIN PWB	1	1	1
	21	302G139050	2G139050	LID SIMM	1	1	1
	22	302GR39170	2GR39170	HOLDER USB KEY	1	1	1
	23	2BL27660		CORE 8-20X34	1	1	1

SP	Ref. No.	Part.No.	Alternative.	Description	Quantity 120	230	240
	101	5MBTPB3020TW++R	B1A53200	BIND T.T SCREW(+) / M3 X 20 CRFREE S-T			
	102	5MBTPB3006TW++R	B1A53060	BIND T.T SCREW(+) / M3 X 6 CRFREE S-T			
	103	B1B03050		+BIND SCREW M3X05(TRIVALENT CHROMAT			

• Parts with "•" are component parts or sub-assemblies of the assembly appearing immediately above them.

• Parts with "⊙'" indicates the spare parts.

• Parts with "• •" are component parts or sub-assembly with "•" appearing immediately above them.

www.drukparts.pl

FIG. 19 Maintenance Kits

SP	Ref. No.	Part.No.	Alternative.	Description	Quantity 120	230	240
		1702G12US0	072G12US	MK-710 U (OPTION)			
				•PULLEY,PAPER FEED	2		
				•PULLEY,SEPARATION	3		
				•PULLEY FEED A	3		
				•UNDER CLEANER REGIST	1		
				•GUIDE REGIST F	2		
				•PARTS,REGISTRATION CLEAN	1		
				•LABEL DRUM CAUTION J	1		
				•LABEL DRUM CAUTION E1	1		
				•LABEL DRUM CAUTION E2	1		
				•LABEL DRUM CAUTION A	1		
				•LABEL DRUM CAUTION CN	1		
				•PARTS,GUIDE TRANSFER	1		
				•DK-710	1		
				•DV-710	1		
				•PARTS FUSER UNIT 120V	1		
				•TR-710	1		
				•UPPER PULLEY,BYPASS	1		
		1702G13EU0	072G13EU	MK-710 E (OPTION)			
				•PULLEY,PAPER FEED		2	2
				•PULLEY,SEPARATION		3	3
				•PULLEY FEED A		3	3
				•UNDER CLEANER REGIST		1	1
				•GUIDE REGIST F		2	2
				•PARTS,REGISTRATION CLEAN		1	1
				•LABEL DRUM CAUTION J		1	1
				•LABEL DRUM CAUTION E1		1	1
				•LABEL DRUM CAUTION E2		1	1
				•LABEL DRUM CAUTION A		1	1
				•LABEL DRUM CAUTION CN		1	1
				•PARTS,GUIDE TRANSFER		1	1
				•DK-710		1	1
				•DV-710		1	1
				•PARTS FUSER UNIT 230V		1	1
				•TR-710		1	1
				•UPPER PULLEY,BYPASS		1	1

www.drukparts.pl

• Parts with "•" are component parts or sub-assemblies of the assembly appearing immediately above them.

• Parts with "⊙'" indicates the spare parts.

• Parts with "• •" are component parts or sub-assembly with "•" appearing immediately above them.

SP	Part.No.	Alternative.	Description	Fig.No.
	1702G12US0	072G12US	MK-710 U	19
	1702G13EU0	072G13EU	MK-710 E	19
	20305130		LABEL L,HIGH TEMPERATURE CAUTION(EXP)	2
	213+4410	49021301	BUSH,CUTTER	16
⊙	29415100	45729416	GEAR,TONER ROLLER	9
	29806810		BUSHING,6 REGISTRATION	4
	2A118370		PULLEY,DRUM SEPARATION	16
	2AC26310		SHIELD 10X8X20,GASKET	6
⊙	2AL06110		GEAR 25	5,7
⊙	2AR00170		PRIMARY PAPER FEED BUSHING ASS'Y	15
	2AR02180		BASE RUBBER	2
⊙	2AR07220		PULLEY,PAPER FEED	4
⊙	2AR07230		PULLEY,SEPARATION	4,9
	2AR07660		GUIDE FILM,SEPARATION PULLEY	4
	2AR07710		MOUNT PAPER FEED DRAWER	2
	2AR07720		COVER CASSETTE RAIL	2
	2AR26340		MOUNT DECK CONNECTOR	17
⊙	2AR27040		SWITCH,INTERLOCK	17
	2AR27800		POWER CORD(230)	17
	2BC06910		STOPPER 6	5,7,9,10,15
	2BC06980		STOPPER 5	5,6,7,9,15,16
⊙	2BC07860		TERMINAL,PAPER SIZE DETECTION	3,9
⊙	2BJ06010		PULLEY FEED A	4,9
	2BJ26210		SHIELD SUBWIRE	17
	2BL02030		BASE	2
	2BL02050		LOWER BASE LSU	2
	2BL02130		LOWER PLATE CONT	2
	2BL02150		MOUNT RIGHT HANDLE	2
	2BL02220		RAIL DRUM R	16
	2BL02230		MOUNT FAN	11
	2BL02240		SPONGE FAN	11
⊙	2BL04050		KEY OPERATION D	1
	2BL04060		FRONT MOUNT COVER	17
⊙	2BL04170		LEFT TOP COVER	1
⊙	2BL04181		REAR TOP COVER	1
	2BL04200		LEVER CONT RELEASE	1
	2BL04220		MOUNT HINGE	1
⊙	2BL04250		COVER LCD	1
⊙	2BL04280		KEY OPERATION C	1
	2BL04290		MOUNT OPERATION	2
⊙	2BL04310		PLATE NUMBER	3
⊙	2BL04330		HOLDER SWITCH	1
	2BL04350		FRONT HINGE COVER P	1
⊙	2BL04370		PLATE NUMBER 2	3
	2BL04450		GROUND PLATE INNER L	17
	2BL04460		SPACER WIRE	17
	2BL04470		MOUNT HINGE S	2
	2BL04480		FRONT HINGE S COVER	1
⊙	2BL04550		LEVER L COVER LOCK M	6
	2BL04560		SPRING L COVER LOCK	6

SP	Part.No.	Alternative.	Description	Fig.No.
	2BL04600		LEVER COVER RELEASE	6
	2BL04660		FRONT PLATE EXIT L	6
	2BL04670		REAR PLATE EXIT L	6
	2BL04680		STRAP COVER	6
	2BL04700		GROUND PLATE LEFT B	6
	2BL04880		FILM HINGE	1,2
	2BL05150		LABEL RADIATION	2
	2BL06020		GUIDE A FEED	5
	2BL06051		FRONT RAIL FEED	5
	2BL06061		REAR RAIL FEED	5
	2BL06110		GUIDE VERTICAL FEED	5
	2BL06130		MOUNT C FEED DRIVE	5
⊙	2BL06150		GEAR Z28 FEED	5
⊙	2BL06160		GEAR Z35-15 FEED	5
⊙	2BL06170		GEAR Z42 FEED	5
⊙	2BL06180		GEAR Z28-P18 FEED	5
⊙	2BL06190		GEAR Z25 FEED	5
	2BL06220		EARTH VERTICAL FEED	5
	2BL06230		GROUND PLATE A FEED	5
	2BL06260		FRONT GUIDE REGIST	5
⊙	2BL06320		BELT CONVEYING	5
	2BL06330		GUIDE B FEED	5
	2BL06340		SPRING FEED	6
⊙	2BL06360		GEAR Z42 BYPASS	5
⊙	2BL06380		GEAR Z25 JOINT	5
	2BL06410		GROUND PLATE MIDDLE	2
	2BL06430		COVER CONNECTOR	5
	2BL06440		MOUNT REGIST SWITCH	5
	2BL06450		HOLDER FEED SWITCH	5
	2BL06460		SPRING LEFT COVER	5
⊙	2BL06480		FILM REGIST F	5
	2BL06520		UPPERGUIDE BYPASS	10
	2BL06530		COVER BYPASSUNIT	9
	2BL06570		MOUNT RAIL	10
	2BL06580		RAIL BYPASS	10
	2BL06590		PULLEY RAIL	2,10
⊙	2BL06600		COVER BYPASSTRAY	9
⊙	2BL06620		SPONGE FRONT	1
	2BL06650		STAY LIFTPLATE	9
	2BL06680		CAM BYPASS	9
	2BL06690		MOUNT BYPASSDRIVE	9
⊙	2BL06720		GEAR 55/15	9
⊙	2BL06730		ACTUATOR BYPASSFEED	10
	2BL06780		SPRING BYPASSFEED	10
	2BL06790		GROUNDPLATE BYPASS	10
	2BL06800		SPRING BYPASS	10
⊙	2BL06810		BELT BYPASSFEED	10
⊙	2BL06820		PULLEY25 BYPASSFEED	10
	2BL06830		DIAL BYPASSFEED	10
	2BL06840		SPRING BYPASS RET	2

• Parts with "⊙"" indicates the spare parts.

www.drukparts.pl

SP	Part.No.	Alternative.	Description	Fig.No.
	2BL06850		JOINT RETARD	9
	2BL06860		SPRING RETARD	9
	2BL06870		SPRING JOINTRETARD	9
	2BL06880		FILM BYPASS	9
	2BL06890		PLATE BYPASS HOLD	9
	2BL06940		EARTH PUSH SWITCH	5
	2BL06950		DUMPER LEFT COVER	5
	2BL06960		STRAP RELEASE	6
⊙	2BL06970		FILM REGIST FF	5
	2BL06990		STOPPER GEAR 8-25	5,9
⊙	2BL07020		ROLLER DU FEED UP	7
⊙	2BL07030		ROLLER DU FEED LOW	7
⊙	2BL07040		ROLLER DU	7
	2BL07060		SPRING DU PULLEY	7
	2BL07080		SPRING DU JOINT	7
⊙	2BL07090		ACTUATOR DU	7
	2BL07110		PLATE EARTH DU	7
	2BL07120		PLATE NUT DU	7
⊙	2BL07130		SPRING DU ACT.	7
	2BL07140		FILM WIRE DU	7
	2BL07150		GUIDE RIB DU	7
	2BL07860		SPRING BYPASS	9
	2BL07900		PLATE LEADING FEED	4
	2BL07910		SUPPORT PLATE FEED	4
⊙	2BL07950		UNDER CLEANER REGIST	7
	2BL07970		CUT WASHER 10	7
	2BL07990		SPRING SEPARATION	4
	2BL13060		REAR ADJUSTING LSU	11
	2BL13070		FRONT ADJUSTING LSU	11
	2BL13120		FRONT MOUNT HOUSING	11
	2BL13250		ADJUSTING PLT LSU	11
	2BL13290		SPRING FIX LSU	11
	2BL14180		FRONT ARM RAIL	12
	2BL14190		REAR ARM RAIL	12
	2BL14200		RAIL DLP	12
	2BL14210		LEVER DLP	12
	2BL14220		PIN LEVER DLP	12
	2BL14240		CAM DLP	6
	2BL14350		GROUND PLATE RAIL	12
	2BL14410		SPRING CAM	6
	2BL14480		SEAL WIRE	12
	2BL16030		STOPPER BUSH	7
⊙	2BL16060		GEAR REGIST Z18	7
⊙	2BL16080		PULLEY FEED	6,7
	2BL16100		STRAP CONVEYING A	7
	2BL16110		STRAP CONVEYING B	7
⊙	2BL16130		GUIDE REGIST F	7
	2BL16150		PLATE TRANS B	7
	2BL16160		PLATE TRANS UNIT GND	7
	2BL16170		PLATE SEPARATION B	7

SP	Part.No.	Alternative.	Description	Fig.No.
⊙	2BL16190		HOOK CONVEYING	7
	2BL16200		SPRING CONVEYING	7
⊙	2BL16220	5AAVBRUSH036	BRUSH CLEANER	1
	2BL16250		GUIDE FEED F	7
	2BL16260		BUSHING REGIST	7
	2BL16290		CUT WASHER 3	6,7
	2BL17010		HOUSING TRANSFER	7
⊙	2BL17040		PULLEY TRANS ROLLER	7
	2BL17050		PLATE TRANS UNIT	7
⊙	2BL17060		BUSH TRANS ROLLER	7
⊙	2BL17090		GEAR TRANS Z25H	7
	2BL17170		BUSHING 8	7
	2BL18160		GEAR SPIRAL 16	14
	2BL18170		GEAR IDLE 15	14
⊙	2BL18300		BLADE CLEANING	14
	2BL18320		HANDLE DRUM	14
	2BL18560		SPONGE LOWER SEAL	14
	2BL18630		BUSHING DRUM A	14
⊙	2BL18870		GEAR CL ROLLER 15	14
⊙	2BL18880		GEAR CL ROLLER 16	14
⊙	2BL20080		CLAW HEAT ROLLER	13
	2BL20091		MOUNT REAR GUIDE	6
	2BL20100		REAR GUIDE FIXING	6
⊙	2BL20260		GEAR FIXING Z33	13
⊙	2BL20330		STATIC ELIMINATOR PRESS	13
⊙	2BL20350		CLAW PRESS ROLLER	6
	2BL21070		SPRING EXIT PULLEY	8
	2BL21100		LEVER GUIDE CHANGE	8
⊙	2BL21120		ACTUATOR EXIT R	8
⊙	2BL21130		ACTUATOR EXIT L	8
	2BL21150		BKT EXIT FULL	8
	2BL21170		PLATE EARTH EXIT F	8
	2BL21180		PLATE EARTH EXIT R	8
	2BL21190		BKT SOLENOID	8
⊙	2BL21210		PULLEY ONEWAY T30	8
⊙	2BL21220		GEAR EXIT Z19	8
⊙	2BL21230		PULLEY EXIT T30	7,8
⊙	2BL21240		BELT EXIT P2M212	7,8
	2BL21250		SPRING ACTUATOR R	8
	2BL21260		SPRING ACTUATOR L	8
	2BL21270		SPRING FEED SHIFT	8
	2BL21290		GUIDE EXIT L	6
⊙	2BL21330		PULLEY FEED SHIFT	6
	2BL21340		SPRING CHANGE PULLEY	6
	2BL21350		GUIDE DU FEED R	1
	2BL21370		LEVER GUIDE CHANGE B	8
⊙	2BL21390		GEAR EXIT JOINT Z26S	8
	2BL21400		SPRING EXIT JOINT	8
⊙	2BL21430		GEAR EXIT Z20	8
⊙	2BL21440		SPRING EXIT CHANGE	8

• Parts with "⊙"" indicates the spare parts.

www.drukparts.pl

SP	Part.No.	Alternative.	Description	Fig.No.
	2BL21460		FILM WIRE PROTECT	6
	2BL21470		PLATE EARTH CHANGE	8
	2BL21480		SPRING EXIT FULL	8
	2BL21490		GUIDE FILM DU	6
	2BL21500		FILM WIRE PROTECT B	6
	2BL21510		CUT WASHER 6	8
	2BL21520		PULLEY EXIT C	8
	2BL22050		GEAR DRUM Z70H	16
	2BL22140		GUIDE DLP	16
	2BL22150		BRACKET CLUTCH	16
	2BL22160		GEAR DRUM Z76H-Z30H	16
	2BL22170		PLATE GUIDE DRUM	16
	2BL22180		GEAR Z37H-Z28H	16
	2BL22190		GEAR Z50H	16
	2BL22210		GEAR CONT Z28S	16
	2BL22220		GEAR Z40S-Z37H	16
	2BL22230		GEAR Z34H	16
	2BL22240		SPRING JOINT FUSER	16
⊙	2BL22320		GEAR Z76H-Z30S	15
⊙	2BL22330		GEAR Z41S-Z24S-P30	15
⊙	2BL22350		BELT DRIVE FEED	15
	2BL22380		PLATE DRIVE MPF B	15
⊙	2BL22400		BELT DRIVE MPF	15
⊙	2BL22420		GEAR Z41S P18	15
	2BL22450		PLATE DRIVE CONT.B	15
⊙	2BL22480		GEAR Z24S-P40	15
⊙	2BL22490		GEAR Z40S-Z25S	15
⊙	2BL22510		SPRING DRIVE CONT.	15
⊙	2BL22520		CLUTCH CONTAINER	15
⊙	2BL22530		GEAR FEED Z41S-P15	15
⊙	2BL22540		GEAR Z60S-P20	15
⊙	2BL22550		GEAR Z40S-Z32S	15
⊙	2BL22560		PULLEY CONT DRIVE	15
⊙	2BL22570		BUSH DRIVE CONT 8	15
	2BL22580		COLLAR BELT	8,15
⊙	2BL22590		BELT DRIVE CONTAINER	15
⊙	2BL22630		GEAR EXIT Z30S	16
⊙	2BL22800		GEAR Z47S-Z28S	16
	2BL22820		SPRING PULLEY	15
	2BL22830		PULLEY TENSION	15
	2BL22840		SHAFT DRIVE DRUM FW	16
	2BL22850		RETAINER FLYWHEEL	16
	2BL22860		FLYWHEEL 190	16
	2BL22870		WEIGHT 190	16
	2BL22880		FILM BKT CLUTCH	16
	2BL22890		MOUNT FLYWHEEL	16
	2BL23040		LID DLP DUCT	16
	2BL23060		DUCT MAIN B	16
	2BL23100		FILM COOLING	16
	2BL23110		GROUND PLATE LEFT FAN	6

SP	Part.No.	Alternative.	Description	Fig.No.
	2BL23120		COVER DUCT DRUM	16
⊙	2BL23170		SPONGE LEFT FAN	6
	2BL26070		SPRING TERMINAL	17
	2BL26080		GROUND PLATE HV	17
	2BL26110		LEFT MOUNT I/L	17
	2BL26120		LEFT WORK PLATE I/L	17
	2BL26150		MOUNT BASE TERMINAL	16
	2BL26160		PLATE TRANSFER A	16
	2BL26170		PLATE SEPARATION A	16
	2BL26200		MOUNT DRUM DRAWER	17
	2BL26270		SPRING TERMINAL T	17
	2BL26290		MOUNT FIXING DRAWER	17
	2BL27660		CORE 8-20X34	18
⊙	2BL93420		PARTS,LAMP CLEANING ASSY	14
⊙	2BL93450		PARTS,REGISTRATION CLEAN	5
⊙	2BM27890		HUMIDITY SENSOR	17
	2C904550		CUT WASHER 5	3
	2C920330		BEARING PRESSURE	13
⊙	2C927210		SENSOR 248NL1	7,9,17
	2FB04220		MAGNET CATCH	1
	2FB06710		PIN CASSETTE RAIL	2
	2FB07050		PIN CURSOR	3
	2FB07060		SPRING CURSOR	3
⊙	2FB27160		INTER LOCK SWITCH	17
⊙	2FG01020		SIZE DETECTION ASS'Y	3,9
	2FG05080		LABEL DRUM CAUTION E1	5
	2FG05090		LABEL DRUM CAUTION E2	5
	2FG05100		LABEL DRUM CAUTION A	5
	2FG06010		FRAME VERTICAL FEED A	5
	2FG06020		MOUNT FEED DRIVE A	5
	2FG06030		MOUNT FEED DRIVE B	5
⊙	2FG06040		GEAR Z21-Z36 FEED	5
	2FG06070		SPRING FEED JOINT	5
	2FG06090		GUIDE MIDDLE FEED	5
	2FG06110		PULLEY MIDDLE FEED	5
	2FG06120		COLLAR FEED JOINT	5
	2FG06130		SPRING GUIDE FEED	5
	2FG06150		MOUNT MID FEED DRIVE	5
	2FG06160		MOUNT BYPASS FEED	5
	2FG06170		GROUND PLATE GUIDE A	5
	2FG06200		FILM MIDDLE FEED	5
⊙	2FG06220		FILM MIDDLE FEED RAIL R	5
	2FG16010		PLATE MID FEED UNIT	7
⊙	2FG16021		ROLLER REGIST	7
	2FG16030		PULLEY REGIST	7
	2FG16160		GUIDE ROLLER F	7
	2FG16170		GUIDE ROLLER R	7
	2FG16250		SPACER REGIST	7
	2FG16270		SHEET CONVEYING	7
	2FG16290		GUIDE FEED	7

• Parts with "⊙"" indicates the spare parts.

www.drukparts.pl

SP	Part.No.	Alternative.	Description	Fig.No.
⊙	2FG16300		SPRING REGIST F	7
⊙	2FG16310		SPRING REGIST R	7
	2FG16320		SPRING FEED	7
	2FG16330		HOLDER SHAFT	7
	2FG17010		HOLDER SEPARATION A	7
	2FG17160		SPRING TRANS R	7
⊙	2FG20070		GEAR 49 HEAT ROLLER	13
⊙	2FG20190		BUSHING HEAT ROLLER	13
⊙	2FG20230		BEARING HEAT ROLLER	13
	2FG22010		PLATE DRIVE FRONT	16
	2FG22030		GEAR Z30H-Z44S	16
	2FG22040		GEAR 44S	16
	2FG22060		PLATE DRIVE EXIT B	16
	2FG22080		PLATE DRIVE FEED B	15
	2FG22090		BRACKET CLUTCH FEED	15
⊙	2FG27110		SWITCH REGISTRATION	5
	2FG27640		CORE ATFC-16-8-76	18
	3019527401	19527401	POWER CORD(120)	17
	3029927232	29927232	POWER CODE AS(240)	17
	302AR07041	2AR07041	SHAFT,WORK PLATE	3
	302AR07251	2AR07251	SHAFT,PAPER FEED	4
	302AR07261	2AR07261	SHAFT,SEPARATION	4
	302AR07271	2AR07271	SHAFT,LEADING FEED	4
	302AR07541	2AR07541	RETAINING PIN,VERTICAL CONVEYING	6
	302AR20511	2AR20511	SHAFT,PRESSURE ROLLER SEPARATION CLAW	6
	302BC06091	2BC06091	WORK PLATE,LIFT CASSETTE	3
	302BL02041	2BL02041	BASE MIDDLE	2
	302BL02122	2BL02122	UPPER RIGHT PLATE	2
	302BL02171	2BL02171	PIN HANDLE	2
⊙	302BL04101	2BL04101	COVER EXIT LOW	1
⊙	302BL04111	2BL04111	FRONT LEFT COVER	1
⊙	302BL04121	2BL04121	REAR LEFT COVER	1
	302BL04191	2BL04191	PIN COVER HINGE	1
	302BL04241	2BL04241	LOWER COVER KEY	1
⊙	302BL04301	2BL04301	LID COVER LEFT	1
⊙	302BL04401	2BL04401	STOPPER PAPER P	1
	302BL04411	2BL04411	PIN COVER	1,9
⊙	302BL04512	2BL04512	LEFT COVER MIDDLE	6
	302BL04521	2BL04521	SHAFT LEFT COVER M	5
	302BL04541	2BL04541	SHAFT L COVER LOCK M	6
	302BL04621	2BL04621	PLATE LEFT COVER M	6
⊙	302BL04651	2BL04651	COVER EXIT L	6
	302BL04841	2BL04841	PIN COVER HINGE S	1
⊙	302BL06081	2BL06081	ROLLER B FEED	5
⊙	302BL06091	2BL06091	ROLLER C FEED	5
⊙	302BL06101	2BL06101	LEFT COVER FEED	6
	302BL06212	2BL06212	SHAFT FEED PULLEY	6
⊙	302BL06541	2BL06541	ROLLER2 BYPASSFEED	10
⊙	302BL06561	2BL06561	ROLLER4 BYPASSFEED	10
	302BL06741	2BL06741	SHAFT BYPASSFEED	10

SP	Part.No.	Alternative.	Description	Fig.No.
	302BL06751	2BL06751	SHAFT RETARD	9
	302BL06761	2BL06761	SHAFT BYPASSCAM	9
	302BL06771	2BL06771	SHAFT BYPASS	9
	302BL06921	2BL06921	SHAFT FEED A	5
	302BL07052	2BL07052	SHAFT DU PULLEY	7
	302BL07071	2BL07071	JOINT DU	7
	302BL14141	2BL14141	MOUNT CAM	6
	302BL14231	2BL14231	SHAFT CAM	6
	302BL16211	2BL16211	SHAFT CONVEYING	7
	302BL16232	2BL16232	SPRING CONV OPEN	5
	302BL16241	2BL16241	SPRING CONVEYING B	7
	302BL18031	2BL18031	REAR COVER DRUM	14
⊙	302BL21021	2BL21021	ROLLER EXIT	8
⊙	302BL21031	2BL21031	ROLLER FEED SHIFT	8
	302BL21061	2BL21061	SHAFT EXIT PULLEY	8
⊙	302BL21081	2BL21081	GUIDE EXIT CHANGE	8
	302BL21141	2BL21141	ACTUATOR EXIT FULL	8
	302BL21161	2BL21161	BKT DISCHARGER	8
	302BL21201	2BL21201	JOINT EXIT	8
⊙	302BL21362	2BL21362	SHAFT CHANGE PULLEY	6
	302BL22371	2BL22371	PLATE DRIVE MPF A	15
	302BL22391	2BL22391	PULLEY MPF DRIVE	15
	302BL22441	2BL22441	PLATE DRIVE CONT.A	15
	302BL22461	2BL22461	SHAFT DRIVE CONT	15
	302BL22811	2BL22811	PLATE TENSION A	15
	302BL23051	2BL23051	DUCT MAIN A	16
	302BL26051	2BL26051	CASE HIGH VOLTAGE	17
	302BL26061	2BL26061	PIN TERMINAL	17
	302BL26281	2BL26281	SHAFT I/L	17
⊙	302F725430	2F725430	STATIC ELIMINATOR HEAT ROLLER	13
	302F805040	2F805040	LABEL OPERATION SHEET	1
	302F845040	2F845040	R/W MODULE 26X45	16
⊙	302FB05200	2FB05200	PLATE SIZE C	3
	302FB05380	2FB05380	LABEL VFEED CAUTION	6
	302FB05440	2FB05440	LABEL VFEED CAUTION 6NATIONS	6
	302FB07032	2FB07032	LEVER CURSOR A	3
	302FB07042	2FB07042	LEVER CURSOR B	3
	302FB07340	2FB07340	ADJUSTING PLATE CASSETTE	3
	302FB07420	2FB07420	PIN CASSETTE	3
⊙	302FB25051	2FB25051	HEATER DEHUMIDIFIER 120	2
⊙	302FB25060	2FB25060	HEATER DEHUMIDIFIER 240	2
	302FB26290	2FB26290	LID VENDOR	17
	302FG02042	2FG02042	FRONT FRAME	2
	302FG02051	2FG02051	REAR FRAME	2
	302FG02071	2FG02071	LOWER LEFT REINFORCEMENT	2
	302FG06051	2FG06051	JOINT FEED DRIVE	5
	302FG06061	2FG06061	SHAFT FEED JOINT	5
	302FG06082	2FG06082	HOUSING FEED	5
	302FG06101	2FG06101	SHAFT MIDDLE FEED	5
⊙	302FG06211	2FG06211	RIGHT ROLLER REGIST	5

• Parts with "⊙"" indicates the spare parts.

www.drukoars.pl

SP	Part.No.	Alternative.	Description	Fig.No.
	302FG07020	2FG07020	PULLEY,CASSETTE RAIL	2
	302FG07032	2FG07032	LEFT RAIL CASSETTE	2
	302FG07050	2FG07050	MOUNT,CASSETTE SWITCH	17
	302FG07091	2FG07091	BASE CASSETTE	3
⊙	302FG07151	2FG07151	CURSOR C CASSETTE	3
⊙	302FG07170	2FG07170	FRONT GUIDE C,CURSOR	3
⊙	302FG07180	2FG07180	REAR GUIDE C,CURSOR	3
	302FG07200	2FG07200	GROUND PLATE,CASSETTE	3
⊙	302FG07230	2FG07230	STOPPER,TRAILING EDGE DETECTION	3
	302FG07251	2FG07251	UPPER HOUSING,PAPER FEED	4
	302FG07260	2FG07260	LOWER HOUSING,PAPER FEED	4
	302FG07271	2FG07271	WEIGHT,LEADING FEED PULLEY	4
	302FG07290	2FG07290	ACTUATOR,PAPER EMPTY	4
	302FG07300	2FG07300	HOLDER,ACTUATOR	4
	302FG07310	2FG07310	REMOVE,ACCESSORY PRIMARY PAPER FEED	4
	302FG07320	2FG07320	STOPPER,SUPPORT PLATE	4
	302FG07330	2FG07330	GROUND PLATE,PRIMARY PAPER FEED	4
	302FG16262	2FG16262	BASE CONVEYING A	7
⊙	302FG16281	2FG16281	SHFAT FEED	7
⊙	302FG20211	2FG20211	THERMISTOR FIXING	13
	302FG22021	2FG22021	PLATE DRIVE REAR	16
	302FG22051	2FG22051	PLATE DRIVE EXIT A	16
	302FG22071	2FG22071	PLATE DRIVE FEED A	15
	302FG22120	2FG22120	COLLAR BELT DRIVE	15
	302FG23021	2FG23021	MOUNT OZONE FILTER A	6
⊙	302FG23030	2FG23030	FILTER OZONE A	6
⊙	302FG23050	2FG23050	FILTER OZONE B	1
	302FG26102	2FG26102	MOUNT INLET A	17
⊙	302FG93111	2FG93111	PARTS,GUIDE TRANSFER	5
⊙	302G101040	2G101040	CODE DIMM PWB ASS'Y WITH SOFTWARE	18
⊙	302G101050	2G101050	PANEL PWB ASS'Y	1
	302G104010	2G104010	COVER REAR	1
⊙	302G104020	2G104020	COVER RIGHT TOP	1
⊙	302G104030	2G104030	TRAY SUB	1
⊙	302G104040	2G104040	COVER LEFT FRONT	1
⊙	302G104050	2G104050	COVER UPPER REAR	1
	302G104070	2G104070	MOUNT COVER REAR R	2
⊙	302G105010	2G105010	COVER UPPER OPERATION 50	1
⊙	302G105020	2G105020	SHEET OPERATION E	1
⊙	302G105030	2G105030	KEY GO	1
⊙	302G105040	2G105040	KEY CANCELL	1
	302G125030	2G125030	STOPPER HEAT ROLLER	13
	302G125070	2G125070	SPRING PRESSURE	13
⊙	302G131010	2G131010	COUPLING K CONT	15
⊙	302G131020	2G131020	COUPLING L CONT	15
	302G139010	2G139010	BOX MOUNT PWB	18
	302G139020	2G139020	MOUNT MAIN PWB	18
	302G139030	2G139030	LID BOX MOUNT	18
	302G139040	2G139040	LID MAIN PWB	18
	302G139050	2G139050	LID SIMM	18

SP	Part.No.	Alternative.	Description	Fig.No.
	302G139090	2G139090	HOLDER PWB	18
	302G139100	2G139100	MOUNT INLET B	17
⊙	302G145010	2G145010	UNIT LOW VOLTAGE 100	17
⊙	302G145020	2G145020	UNIT LOW VOLTAGE 200	17
	302G146010	2G146010	WIRE LSU	11
	302G146020	2G146020	WIRE MAIN-ENGINE PWB	18
	302G146030	2G146030	WIRE POWER-MAIN	18
	302G146040	2G146040	WIRE OPE FRONT	1
	302G146050	2G146050	WIRE OPE INNER	17
	302G146070	2G146070	WIRE EJECT(P)	8
	302G146080	2G146080	WIRE OPE REAR	17
	302G146090	2G146090	WIRE PAPER FEED(P)	17
	302G146100	2G146100	WIRE MOTOR(P)	17
	302G146120	2G146120	WIRE FRONT(P)	17
	302G146130	2G146130	WIRE HIGH VOLTAGE(P)	17
	302G146140	2G146140	WIRE DRAWER(P)	17
	302G146150	2G146150	WIRE PRIMARY(P)	17
⊙	302G147010	2G147010	MAIN PWB ASS'Y	18
⊙	302G193010	2G193010	PARTS FUSER UNIT 120V	13
⊙	302G193020	2G193020	PARTS FUSER UNIT 230V	13
⊙	302G193030	2G193030	DK-710	14
⊙	302G193040	2G193040	DV-710	12
⊙	302G193050	2G193050	PARTS EXIT UNIT	8
⊙	302G193060	2G193060	PARTS CONT DRIVE A ASSY	15
⊙	302G193070	2G193070	PARTS CONT DRIVE E ASSY	15
⊙	302G193080	2G193080	PARTS LEFT COVER MIDDLE ASSY	6
⊙	302G193090	2G193090	PARTS OPERATION UNIT	1
⊙	302G194010	2G194010	PARTS,EMBLEM ASS'Y SP	1
⊙	302G194020	2G194020	PARTS,ROLLER HEAT SP	13
⊙	302G194030	2G194030	PARTS,HEATER 120 FUSER SP	13
⊙	302G194040	2G194040	PARTS,HEATER 230 FUSER SP	13
⊙	302G194050	2G194050	PARTS UPPER COVER KEY 50 ASSY	1
⊙	302G194060	2G194060	PARTS,PWB ENGINE ASS'Y SP	18
⊙	302G634070	2G634070	LABEL ENERGY STAR	1
	302GR01190	2GR01190	TONER DETECTION ASS'Y	17
	302GR01240	2GR01240	INLET ASS'Y	17
⊙	302GR01250	2GR01250	TONER SENSOR ASSY	16
	302GR02011	2GR02011	COVER DRUM A	16
	302GR02020	2GR02020	SHAFT DRUM COVER	16
	302GR02030	2GR02030	HOLDER SHAFT F	16
	302GR02040	2GR02040	HOLDER SHAFT R	16
	302GR02050	2GR02050	GUIDE STRAP	16
	302GR02060	2GR02060	STRAP DRUM COVER	16
	302GR02070	2GR02070	ARM DRUM COVER A	16
	302GR02080	2GR02080	ARM DRUM COVER B	16
	302GR02090	2GR02090	SPRING DRUM COVER	16
	302GR02110	2GR02110	UPPER PLATE DRUM	2
	302GR02120	2GR02120	ADJUSTOR FUSER	13
	302GR02130	2GR02130	MOUNT TRAY EJECT	2
	302GR02140	2GR02140	PLATE DRUM COVER	16

• Parts with "⊙" indicates the spare parts.

www.drukgns.pl

SP	Part.No.	Alternative.	Description	Fig.No.
	302GR02150	2GR02150	CUSHION DRUM COVER B	16
	302GR02160	2GR02160	CUSHION DRUM COVER C	16
	302GR02170	2GR02170	CUSHION DRUM COVER D	16
	302GR02221	2GR02221	LEVER LOCK CASSETTE	2
	302GR02230	2GR02230	SPRING LEVER	2
	302GR02240	2GR02240	PIN FRONT CASSETTE RAIL	2
	302GR02250	2GR02250	LOWER RIGHT REINFORCEMENT	2
	302GR02330	2GR02330	PIN FEED	5
	302GR02340	2GR02340	RIGHT HANDLE MACHINE	2
	302GR02350	2GR02350	HANDLE MACHINE	2
	302GR02550	2GR02550	UPPER PLATE FIXING	2
	302GR02560	2GR02560	FUSER RING DRUM COVER	16
	302GR02810	2GR02810	PIN LEFT COVER	6
	302GR02820	2GR02820	PIN DRIVE TENSION	15
	302GR02830	2GR02830	PIN LSU FIXING	11
	302GR02840	2GR02840	PIN REAR GUIDE FIXING	6
	302GR02850	2GR02850	PIN DLP RAIL	12
	302GR02860	2GR02860	PIN EXIT	8
⊙	302GR04011	2GR04011	COVER TOP EJECT	1
⊙	302GR04020	2GR04020	COVER CENTER FRONT	1
⊙	302GR04030	2GR04030	COVER RIGHT FRONT	1
⊙	302GR04040	2GR04040	COVER LEFT FRONT LOW	1
⊙	302GR04080	2GR04080	COVER RIGHT SIDE LOW	1
⊙	302GR04170	2GR04170	COVER MAIN SW	1
⊙	302GR04250	2GR04250	COVER OZONE	1
	302GR04260	2GR04260	HOUSING OZONE COVER	1
	302GR04320	2GR04320	INNER RIGHT COVER	1
	302GR04330	2GR04330	INNER LEFT COVER	17
	302GR04460	2GR04460	SEAL PROTECT OZONE	6
⊙	302GR06010	2GR06010	PULLEY MIDDLE FEED A	5
⊙	302GR06020	2GR06020	PULLEY MIDDLE FEED B	5
	302GR06030	2GR06030	JOINT FEED	5
	302GR06200	2GR06200	LEVER SEPARATION RELEASE	4
	302GR06220	2GR06220	HOLDER WIRE	5
	302GR06510	2GR06510	SPRING BYPASSFEED	10
	302GR08010	2GR08010	BASE BYPASS	9
	302GR08021	2GR08021	PLATE LIFT BYPASS	9
	302GR08030	2GR08030	COVER CURSOR	9
	302GR08040	2GR08040	FRONT CURSOR BYPASS	9
	302GR08050	2GR08050	REAR CURSOR BYPASS	9
	302GR08060	2GR08060	MOUNT SIZE PWB	9
⊙	302GR08070	2GR08070	RACK CURSOR	9
⊙	302GR08080	2GR08080	TABLE BYPASS	9
	302GR08090	2GR08090	CUSHION MPF A	9
	302GR08100	2GR08100	BASE BYPASS FEED	10
	302GR08110	2GR08110	FILM UPPER GUIDE	10
	302GR09010	2GR09010	CASSETTE	3
⊙	302GR09020	2GR09020	HANDLE CASSETTE 1	3
⊙	302GR09030	2GR09030	COVER CASSETTE	3
⊙	302GR09040	2GR09040	HANDLE CASSETTE 2	3

SP	Part.No.	Alternative.	Description	Fig.No.
	302GR09050	2GR09050	LEVER CASSETTE	3
	302GR09060	2GR09060	RAIL CURSOR R	3
	302GR09070	2GR09070	LID PAPER SIZE	3
	302GR09080	2GR09080	RAIL CURSOR A	3
	302GR09090	2GR09090	SUPPORT PLATE	3
⊙	302GR09102	2GR09102	FRONT CURSOR CASSETTE	3
⊙	302GR09112	2GR09112	REAR CURSOR CASSETTE	3
	302GR09120	2GR09120	SPRING LEVER CASSETTE	3
	302GR09130	2GR09130	SHAFT PULLEY	3
	302GR09140	2GR09140	SHAFT HANDLE	3
⊙	302GR09150	2GR09150	WORK PLATE HANDLE	3
	302GR09160	2GR09160	STOPPER PAPER	3
⊙	302GR09201	2GR09201	PLATE SIZE INCH	3
	302GR09990	2GR09990	LIFT LOCK	3
	302GR12010	2GR12010	FRONT COVER DRUM	14
⊙	302GR12110	2GR12110	LOWER SEAL CLEANING	14
⊙	302GR22010	2GR22010	ROLLER TRANSFER	7
	302GR22020	2GR22020	BRUSH SEPARATION	7
	302GR22030	2GR22030	SPACER SEPARATION	7
	302GR22050	2GR22050	SPRING TRANSFER F	7
	302GR22110	2GR22110	COLLAR TRANS ROLLER	7
⊙	302GR24010	2GR24010	HANDLE CONVEYING	7
	302GR24020	2GR24020	PLATE PAPER GUIDE	7
	302GR24030	2GR24030	MOUNT CONVEYING FAN	7
	302GR24040	2GR24040	FILM COVER WIRE	7
	302GR25010	2GR25010	UPPER FRAME FUSER	13
	302GR25021	2GR25021	LOWER FRAME FUSER	13
	302GR25030	2GR25030	GUIDE CHUTE	13
	302GR25040	2GR25040	FRONT FRAME FUSER	13
	302GR25050	2GR25050	REAR FRAME FUSER	13
	302GR25060	2GR25060	FRONT PRESSING PLATE	13
	302GR25070	2GR25070	REAR PRESSING PLATE	13
	302GR25080	2GR25080	STAY RIGHT FUSER	13
	302GR25100	2GR25100	PLATE GUIDE CHUTE	13
	302GR25160	2GR25160	PIN LOWER FRAME	13
	302GR25180	2GR25180	PLATE THERMO CUT	13
	302GR25200	2GR25200	HOLDER THERMO CUT	13
	302GR25210	2GR25210	PIN UPPER FRAME	13
	302GR25220	2GR25220	SPRING THERMISTOR	13
	302GR25230	2GR25230	PLATE ELIMINATOR	13
	302GR25240	2GR25240	PIN GUIDE CHUTE	13
	302GR25250	2GR25250	MOUNT THERMO CUT HOLDER	13
	302GR25270	2GR25270	GROUND PLATE FUSER	13
	302GR25280	2GR25280	SPRING CLAW	13
⊙	302GR25290	2GR25290	THERMOSTAT M FUSER	13
⊙	302GR25350	2GR25350	SPRING CLAW PRESS	6
	302GR28011	2GR28011	FRAME EXIT UP	8
	302GR28020	2GR28020	FRAME EXIT LOW	8
	302GR28040	2GR28040	GUIDE FEED SHIFT L	6
	302GR28050	2GR28050	GUIDE LEFT COVER M	6

• Parts with "⊙"" indicates the spare parts.

www.drukarnia.pl

SP	Part.No.	Alternative.	Description	Fig.No.
	302GR28060	2GR28060	PULLEY EXIT	8
	302GR29010	2GR29010	FRAME DU	7
	302GR33010	2GR33010	DUCT UPPER DRUM	16
	302GR33020	2GR33020	DUCT UPPER CONT	16
	302GR33030	2GR33030	HOLDER RFID	16
⊙	302GR34010	2GR34010	LABEL CASSETTE OPERATION	3
⊙	302GR34021	2GR34021	LABEL PAPER SIZE	3
⊙	302GR34031	2GR34031	LABEL PAPER SIZE R	3
⊙	302GR34040	2GR34040	LABEL LEFT COVER A	6
	302GR34050	2GR34050	LABEL JAM A1	10
	302GR34060	2GR34060	LABEL JAM A2	10
	302GR34070	2GR34070	LABEL JAM A3	10
⊙	302GR34090	2GR34090	LABEL SET PAPER CAUTION A	9
⊙	302GR34121	2GR34121	LABEL BYPASS SIZE	9
	302GR34150	2GR34150	LABEL HIGH TEMP	6
	302GR34170	2GR34170	LABEL BYPASS JAM R	9
	302GR34180	2GR34180	LABEL SEP CLEANING	1
⊙	302GR34190	2GR34190	LABEL CONVEYING JAM	1
⊙	302GR34200	2GR34200	LABEL CONTAINER	1
	302GR34250	2GR34250	LABEL JAM A4	9
⊙	302GR34260	2GR34260	LABEL SET PAPER CAUTION	9
	302GR39081	2GR39081	MOUNT POWER PWB	17
	302GR39090	2GR39090	MOUNT OPTION I/F	17
	302GR39120	2GR39120	MOUNT MAIN SW	17
	302GR39170	2GR39170	HOLDER USB KEY	18
	302GR39190	2GR39190	COVER CONN	17
⊙	302GR44090	2GR44090	MOTOR EJECT	16
	302GR44100	2GR44100	MOTOR MAIN	16
⊙	302GR44110	2GR44110	MOTOR LIFT	15
⊙	302GR44120	2GR44120	CLUTCH FEED	5,7,15
⊙	302GR44130	2GR44130	CLUTCH FEED B	9
⊙	302GR44140	2GR44140	CLUTCH REGISTRATION	5,16
⊙	302GR44150	2GR44150	SOLENOID TONER	15
⊙	302GR44160	2GR44160	SOLENOID FEED SHIFT	8
⊙	302GR44220	2GR44220	SWITCH CONVEYING	5
⊙	302GR44250	2GR44250	FAN CONVEYING 42-10	7
⊙	302GR44280	2GR44280	SWITCH BYPASS SIZE	9
⊙	302GR45031	2GR45031	HVU	17
	302GR46160	2GR46160	WIRE FINISHER SOCKET	17
	302GR46210	2GR46210	WIRE CONTAINER	16
	302GR46230	2GR46230	WIRE BYPASS UNIT	9
	302GR46240	2GR46240	WIRE RESISTRATION	5
	302GR46250	2GR46250	WIRE CONT SW	15
	302GR46260	2GR46260	WIRE CONVEYING	5
	302GR46270	2GR46270	WIRE BYPASS TRAY	9
	302GR46280	2GR46280	WIRE FEED 1	5
	302GR46290	2GR46290	WIRE TONER DISPOSAL	17
	302GR46300	2GR46300	WIRE BYPASS FEED PI	17
	302GR46310	2GR46310	WIRE CONVEYING FAN	6
	302GR46420	2GR46420	WIRE DUPLEX	7

SP	Part.No.	Alternative.	Description	Fig.No.
	302GR46430	2GR46430	WIRE PRIMARY FEED UNIT1	4
	302GR46440	2GR46440	WIRE PRIMARY FEED UNIT2	2
	302GR46450	2GR46450	WIRE CASSETTE UNIT	3
	302GR46590	2GR46590	WIRE RFID	16
	302GR46630	2GR46630	WIRE FAN	18
	302GR46730	2GR46730	WIRE CONVEYING FAN	7
	302GR46740	2GR46740	WIRE DEHUMIDIFIER HEATER JUNCTION	2
⊙	302GR93020	2GR93020	PARTS PRIMARY PAPER FEED UNIT	4
⊙	302GR93070	2GR93070	MC-710	14
⊙	302GR93080	2GR93080	CT-710	3
⊙	302GR93090	2GR93090	LK-710	11
⊙	302GR93110	2GR93110	PARTS BYPASS UNIT	9
⊙	302GR93120	2GR93120	PARTS BYPASS FEED UNIT	10
⊙	302GR93140	2GR93140	FE-710	7
⊙	302GR93150	2GR93150	PARTS MIDDLE FEED UNIT	5
⊙	302GR93160	2GR93160	PARTS VERTICAL FEED UNIT	5
⊙	302GR93180	2GR93180	PARTS REAR GUIDE FUSER UNIT	6
⊙	302GR93190	2GR93190	PARTS CLAW SEPARATION ASSY	14
⊙	302GR93200	2GR93200	DR-710	16
⊙	302GR93280	2GR93280	TR-710	7
⊙	302GR94220	2GR94220	PARTS,FAN CONTROLLER 80-15 SP	18
⊙	302GR94230	2GR94230	PARTS,FAN FIXING 80-25 SP	16
⊙	302GR94240	2GR94240	PARTS,FAN LSU 90-25 SP	16
⊙	302GR94250	2GR94250	PARTS,FAN LSU 60-25 SP	11
⊙	302GR94260	2GR94260	PARTS,MOTOR FEED SP	15
⊙	302GR94280	2GR94280	PARTS,ROLLER PRESS SP	13
⊙	302GR94320	2GR94320	PARTS,THERMISTOR FUSER NC SP	13
⊙	302GR94340	2GR94340	PARTS,FAN DU 60-15	6
⊙	302GR94430	2GR94430	PARTS FILTER DUST F1 ASSY	11
⊙	302GR94440	2GR94440	PARTS FILTER DUST F2 ASSY	11
⊙	302GR94450	2GR94450	PARTS MCH MOTOR ASSY	14
⊙	302GZ05010	2GZ05010	COVER UPPER OPERATION 40	1
⊙	302GZ47010	2GZ47010	MAIN PWB ASS'Y	18
⊙	302GZ94010	2GZ94010	PARTS UPPER COVER KEY 40 ASSY	1
	33927451	33927451	RETAINING PIN,DRAWER	2,17
	36006141	36006141	PIN,JAM REMOVEMENT DIAL	12
	303A06131	3A06131	JOINT,BYPASS PICKUP	9
	303BH26021	3BH26021	PLATE,OPTION	18
⊙	303BN27061	3BN27061	SWITCH,EJECT	8
⊙	33906070		TORQUE LIMITER,PAPER FEED	4
⊙	33906160		GEAR 16,PAPER FEED	4,9
⊙	33906430		TORQUE LIMITER,BYPASS	9
⊙	33906660		RIGHT PULLEY,FEED	10
	33907170		DETECTION PLATE,PAPER SIZE	3
	33907210		CUSHION,CASSETTE WORK PLATE	3
	33927590		COREY-15X18	1
	33973300		STOPPER 7,CARTRIDGE	5
	34806040		LOWER BUSHING,PAPER FEED	4
	34806490		FRICTION PLATE,BYPASS LEADING FEED	9
⊙	34821100		STATIC ELIMINATOR,EJECT	8

www.drukparts.pl

• Parts with "⊙"" indicates the spare parts.

SP	Part.No.	Alternative.	Description	Fig.No.
⊙	34907141		GEAR 18,CASSETTE	9
	34907150		PULLEY,CASSETTE	3
⊙	34922420		GEAR 15	4
⊙	35927420		SWITCH,SIZE	5,17
⊙	36222250		GEAR 30,IDLE	5
⊙	36722860		GEAR 18	5,6,10
	3A205010		LABEL,CAUTION GEAR	9
	3A206100		ARM,BYPASS PE	9
	3A206170		HOLDER,RETARD	9
	3A206210		MOUNT,BYPASS PE SWITCH	9
⊙	3CF04060		PLATE NUMBER4	3
	3CY06030		REAMER M4	3
⊙	3CY06090		GEAR 20,CURSOR	3
⊙	3CY06100		GEAR 20,CURSOR	3
⊙	5FNXGP1A73A++02	2DC27180	PT.SENSOR GP1A73A00/ BK	4
	5MMS111SL002	2BY20050	NUT FUSER A /2-180/3000 A4	13
	5MMT263SN012++R	2D903100	SCREW OP M3 X 8 CRFBSE A4	18
	5MVB743SL004	2BL26210	RAIL OPTION A /B-05 CONT BOX A2	18
	5MVB743SL005	2BL26220	RAIL OPTION B /B-05 CONT BOX A2	18
⊙	5MVG137DB025	2BL22740	GEAR M FEED Z25 /D1026 A4	15
	5MVG148DN027	2BL22770	GEAR Z37S /40633V0081 A4	16
	5MVG169DN019	2BL22710	GEAR Z76H-Z35H /30633D0068 A3	16
	5MVM122DB003	2BM17920	BUSH POM /F0093 A4	6
⊙	5MVS446VE001	2BL06470	PLATE SIZE C /2BL06470A A4	3
	5MVX111DN003	2A806250	RING STOPPER /A-49 FEED A4	4,5,7,15
	5MVX111DN007	2BT11070	STOPPER 3 /2BT1107 A4	16
⊙	5MVX321CE001	3CF04050	PLATE NUMBER 3 /3CF0405 A4	3
⊙	5MVX421DN003	2BL06490	LOCK COVER R /40283V0068 A4	5
	5MVX621SH003	2BM26020	GUID CF CARD /45252C0006 A4	18
⊙	60907170		CUSHION,CASSETTE R	3
⊙	61705110		LABEL,PAPER UPPER LIMIT	3
⊙	61706770		UPPER PULLEY,BYPASS	9
	65009050		SPRING,DEVELOPING ROCK	6
⊙	66006810		GEAR,16 BYPASS PULLEY	9
	66007310		PIN,CASSETTE WORK PLATE	9
	66106080		SPRING,PAD	3
	66107100		PAD,CASSETTE	3
⊙	66127010		SWITCH,COVER OPEN	15,17
⊙	66506630		GEAR 20,IDLE	7
	67322230		BUSHING 8	5,7,8,9,10,15
⊙	72321350		GEAR 30, FD EJECT IDLE	9
	73210450		BUSH, 6	7,8,9
	75718040		BUSHING,CLEANING BLADE SHAFT	7
⊙	7SC010101+++H01	SC023350	SW.SEESAW	17
	7YBCP8P8E001H01	YB020910	FERRITE CORE	17
	7YCC02B1001+H01	YC014610	CONNECTOR	7
	7YCC03B1106+H01	YC047300	CONNECTOR	5
	7YCC05B1106+H01	YC047310	CONNECTOR	17
⊙	7YCC08B2046+H01	YC026110	CONNECTOR	3,4
⊙	7YCC08B2046+H02	YC026130	CONNECTOR	2,17

SP	Part.No.	Alternative.	Description	Fig.No.
	7YCC10B1112+H01	YC046880	CONNECTOR	12,17
	7YZM510007++H01	YZ042780	ACCESS.SPACER	17
	7YZM510009++H01	YZ042790	ACCESS.SPACER	15,17
	7YZM610001++H01	YZ010230	ACCESS SADDLE	15,17
	7YZM610002++H01	YZ010240	ACCESS SADDLE	17
	7YZM610003++H01	YZ010250	ACCESS SADDLE	9,15,16,17,18
	7YZM610007++H01	YZ023340	ASSCESS.SADDLE	2,5,9,11,15,16,17,18
	G3169000		BEARING 6900ZZNR	16
	M2104210		EDGING,EDS-2	17
	M2104250		EDGING,EDS-17L(KITAGAWA)	17
	M2104280		EDGING,EDS-25L(KITAGAWA)	17
	M2104350		EDGING,EDS-0607M(KITAGAWA)	9
	M2104390		EDGING,EDS-0607L(KITAGAWA)	8
	M2105210		MINI CLAMP,UAMS-02WL-0(KITAGAWA)	9
	M2105740		MINIATURE CLAMP,UAMS-05S-2	8,17
	M2105910		CLAMP,CKN-07(KITAGAWA)	17
	M2107120	49827700	BINDING BAND SG-130	2
	M2107240		BAND,KI-100(KITAGAWA)	7
	M2109350		WIRE SADDLE,YMC-15-0(KITAGAWA)	15,17
	M2109410		WIRE SADDLE,YMW-16(KITAGAWA)	15

• Parts with "⊙"" indicates the spare parts.

www.drukparts.pl