CLBP-400

PARTS CATALOG

REVISION 0

www.drukparts.pl

Canon

MAY 2000

RY8-3318-000

COPYRIGHT © 2000 CANON INC.

CANON CLBP-400 REV.0 MAY 2000 PRINTED IN JAPAN [IMPRIME AU JAPON]

PREFACE

This Parts Catalog contains listings of parts used in the CLBP-400, the Duplex Unit, the Paper Feeder, and the ETHERNET BOARD NB-4F. Diagrams are provided with the listings to aid the service technician in clearly identifying the item to be orderd.

Whenever ordering parts, consult this Parts Catalog for all of the information pertaining to each item. Be sure to include in the Parts Request the full item description, the item part number, and the quantity. The parts catalog may be revised if there is significant product modification. For minor product modifications, a Service Information Bulletin will be issued.

Canon Inc.

Peripheral Products Quality Planning Div.
Peripheral Products Technical Documentation Dept
5-1, Hakusan 7-chome, Toride-shi, Ibaraki 302-8501, Japan

www.drukparts.pl

COPYRIGHT © 2000 CANON INC.

Printed in Japan
Imprimé au Japon

Use of this manual should be strictly supervised to avoid disclosure of confidential information.

LIST OF ORDER AND SERIAL NUMBERS

NAME	REMARKS	ORDER No.	SERIAL No.
CLBP-400	220-240V	R96-1048-000	KMNA00001-
UNIVERSAL CASSETTE 250 UC-83		R96-4000-000	
DUPLEX UNIT		R96-5006-000	LJB00001-
PAPER FEEDER		R96-5005-000	LJC00001-
UNIVERSAL CASSETTE 500 UC-83K		R96-4010-000	
ETHERNET BOARD NB-4F		R03-7900-000	

www.drukparts.pl

CONTENTS

A. ASSEMBLY LOCATION DIAGRAM

100. EXTERNAL COVERS, PANELS, ETC.
101. TOP COVER ASS'Y
102. INTERNAL COMPONENTS 1
103. INTERNAL COMPONENTS 2
104. INTERNAL COMPONENTS 3
105. INTERNAL COMPONENTS 4
120. VIDEO CONTROLLER ASS'Y
150. UPPER DRAWER ASS'Y
160. MULTI-PURPOSE DRAWER ASS'Y

251. DRUM DRIVE ASS'Y
255. ROTARY DRIVE ASS'Y

300. CASSETTE (250)
310. PAPER PICK-UP ASS'Y
315. MP TRAY PAPER PICK-UP ASS'Y
350. FACE-DOWN DELIVERY ASS'Y

580. SECONDARY TRANSFER ASS'Y

810. FIXING ASS'Y

900. PCB ASS'Y LOCATION DIAGRAM

- DUPLEX UNIT -

SA. ASSEMBLY LOCATION DIAGRAM

S11. DUPLEX UNIT MAIN BODY

S40. DUPLEXING FEEDER ASS'Y

S50. REVERSING ASS'Y
S55. LOWER REVERSING ASS'Y

S90. PCB ASS'Y LOCATION DIAGAM

- PAPER FEEDER -

EA. ASSEMBLY LOCATION DIAGRAM

E11. PAPER FEEDER MAIN BODY

E20. PAPER PICK-UP DRIVE ASS'Y

E30. CASSETTE (500)

E90. PCB ASS'Y LOCATION DIAGRAM

- ETHERNET BOARD -

W10. ETHERNET BOARD NB-4F

B. NUMERICAL INDEX

www.drukparts.pl

COPYRIGHT © 2000 CANON INC.
CANON CLBP-400 REV.0 MAY 2000 PRINTED IN JAPAN [IMPRIME AU JAPON]

HOW TO USE PARTS LISTS

Assembly Location Diagrams. These diagrams show the locations of major assemblies of the machine. Their names are identified in rectangular boxes. Below each box is the number of the Figure which shows an exploded view of the assembly.

Finding a Parts Number. Refer to the Assembly Location Diagrams and find the Figure Number of the assembly of interest. Turn to the page(s), locate the part on the exploded view, and find its Key Number. Refer to the Parts List on the page facing the exploded view and find the Key Number, Part Number and quantity required for your type of machine.

Note : While looking for a Part Number, pay particular attention to the voltage listed in the SERIAL NUMBER/REMARKS columm to ensure that the Part Number selected is for your type of machine. Immediate shipping or action regarding the part depends on using its correct Part Number.

Parts List pages. The Parts List pages contain the following columns and information.

(1) Figure and Key Number column. The first column shows the Figure Number of the illustration corresponding to the Parts List, and the Key Number that identifies the part on the illustration.

(2) Part Number. The second column shows the Part Number for the part. This Number must be used when ordering replacement parts or assemblies described in the description column do not have a Part Number and are not stocked.

Note : The last three digits (suffix) of the Parts Number are called the Revision Number. The Revision Number is changed if the part is modified. Information regarding such changes will be provided by Service Information Bulletins. These Bulletins should be read carefully.

(3) Rank N. Parts marked N are service parts, but are not stock items. They are produced on a special-order basis.

(4) Quantity column. The quantity shown in this column is the number of parts used in the Figure. However, the quantity listed for an assembly indicates the number of that assembly per machine. The letters in this column indicate that the quantity of a parts is not specified, allowing the use of the number of parts needed for assembly and that the quantity cannot be mentioned clearly.

(5) Description column. The Description column lists the description that should be used when ordering the part.

(6) Serial Number/Remarks. When there are differences in the specifications of power suppply voltage, frequency, etc., the differences are described in words or indicated by one two or three letters in front of the serial number.

(Example)

Serial number ABC00001

This is the descriptive indicator.

If a model modified and a part is no longer interchangeable, the serial number of machines for which the part can be used is shown in this column. If there is no indication the part can be used with all models.

Numerical Index. There is a Numerical Index at the end of this catalog; it lists in numerical order every Part Number contained in the Parts Lists. The Numerical Index contains the following columns and information.

(1) Part Number. The first column shows the Part Number.

(2) Figure and Key Number column. The second column lists the Figure and Key Number for each occurrence of the part in the illustrations.

www.drukparts.pl

FIGURE A ASSEMBLY LOCATION DIAGRAM (1/2)

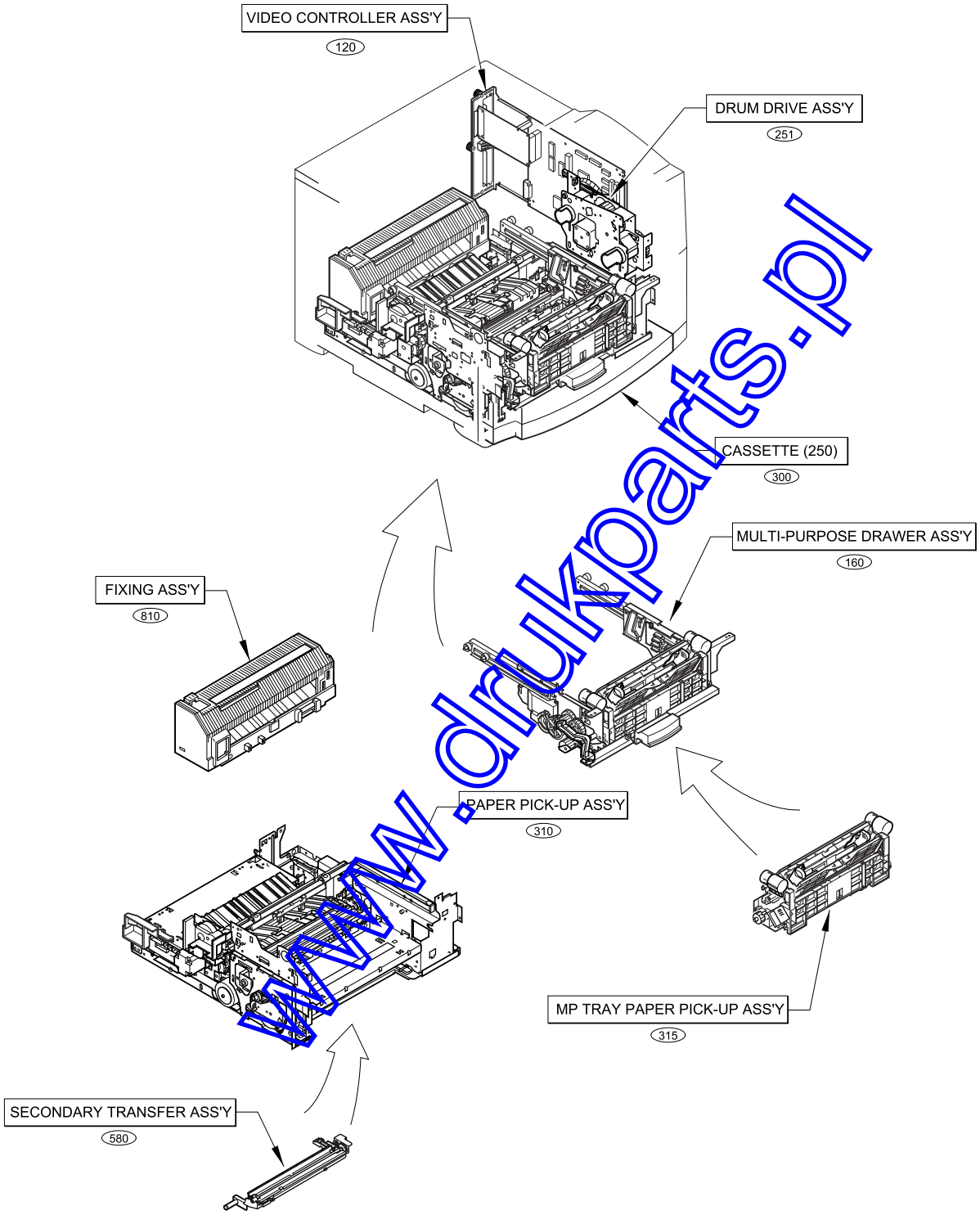

www.drukparts.pl

COPYRIGHT © 2000 CANON INC.
CANON CLBP-400 REV.0 MAY 2000 PRINTED IN JAPAN [IMPRIME AU JAPON]

FIGURE A ASSEMBLY LOCATION DIAGRAM (2/2)

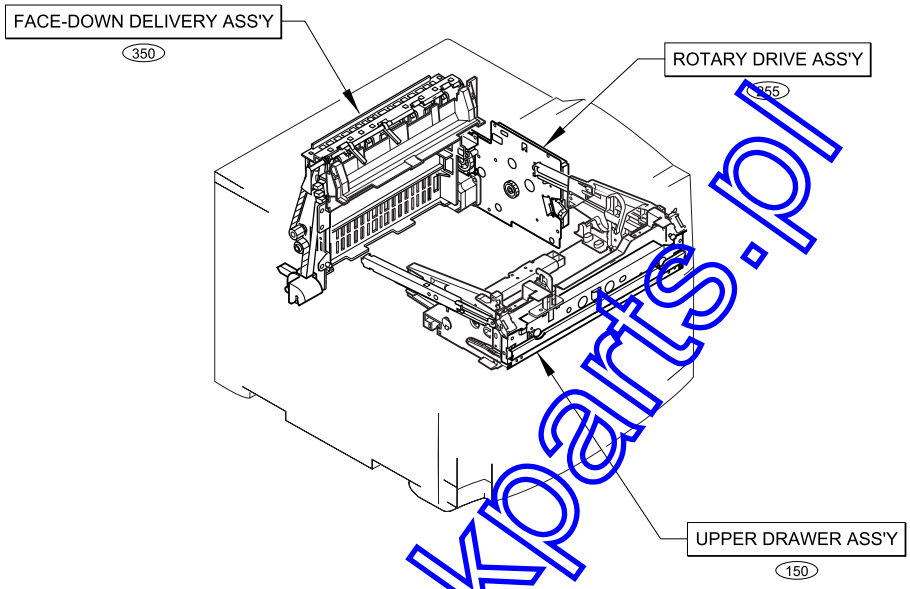

www.drukparts.pl

FIGURE 100 EXTERNAL COVERS, PANELS, ETC.

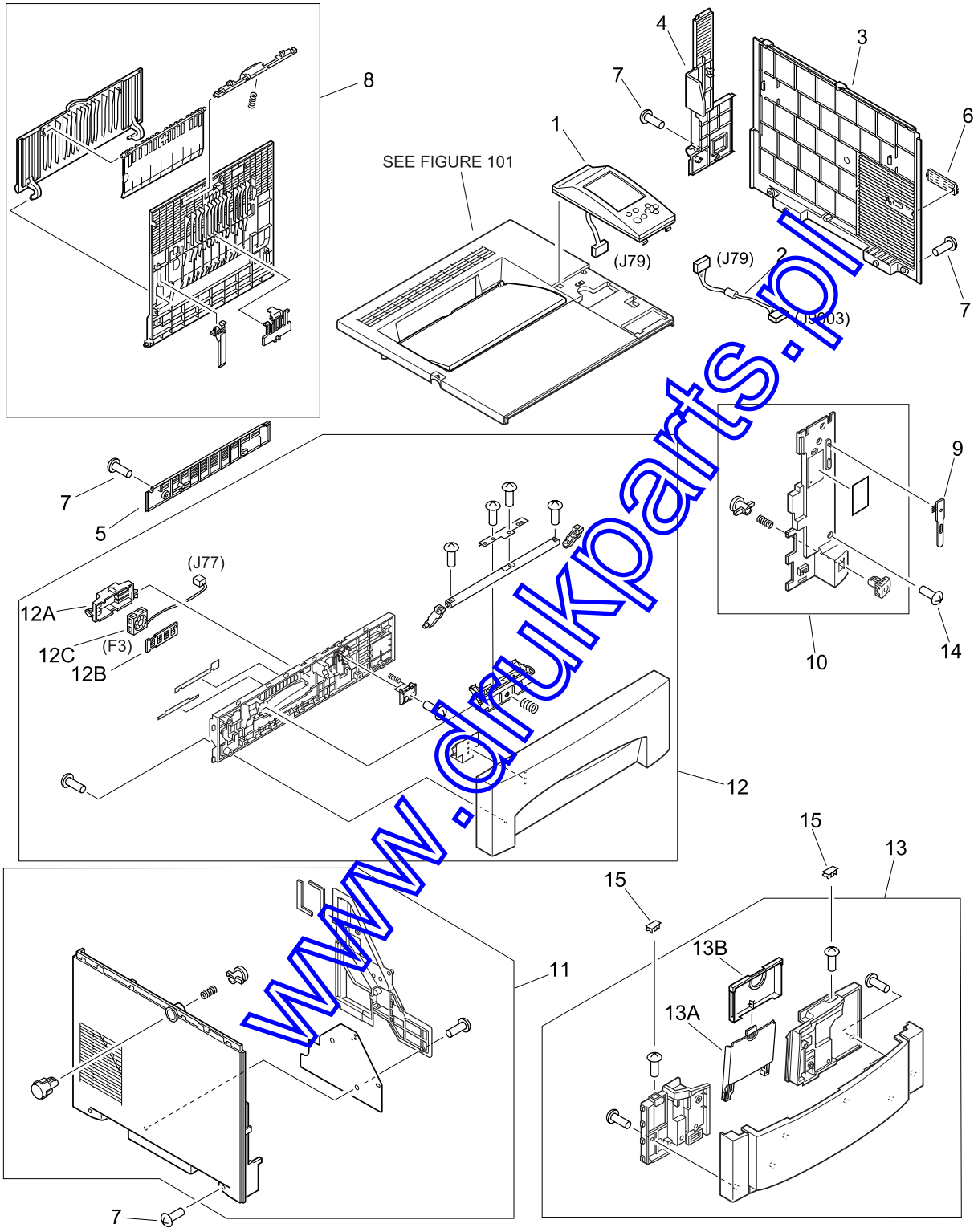

www.drukparts.pl

COPYRIGHT © 2000 CANON INC.
CANON CLBP-400 REV.0 MAY 2000 PRINTED IN JAPAN [IMPRIME AU JAPON]

FIGURE & KEY NO.	PART NUMBER	RANK	Q'TY	DESCRIPTION	SERIAL NUMBER / REMARKS
100 -	NPN		RF	EXTERNAL COVERS, PANELS, ETC.	
1	RG5-5243-000		1	OPERATION PANEL ASS'Y	J79
2	RG1-3890-000		1	DISPLAY CABLE	J79, J9003
3	RB2-1506-000		1	COVER, RIGHT	
4	RB2-1504-020		1	COVER, REAR	
5	RB2-1505-000		1	COVER, REAR, LOWER	
6	RB2-1503-000		1	COVER	
7	XA9-1161-000		30	SCREW, W/WASHER, M3X8	
8	RG5-3327-040		1	DELIVERY COVER ASS'Y	
9	RB2-0863-000		1	HOLDER, CLEANER	
10	RG5-3312-000		1	FRONT COVER ASS'Y	
11	RG5-5210-000		1	LEFT COVER ASS'Y	
12	RG5-5233-000		1	UPPER FRONT COVER ASS'Y	
12A	RB2-5174-000		1	COVER, FAN	
12B	RB2-1297-000		1	FILTER, AIR	
12C	RH7-1436-000		1	FAN	F3, J77
13	RG5-5246-000		1	MIDDLE FRONT COVER ASS'Y	
13A	RB2-1482-000		1	TRAY, EXTENSION, 1	
13B	RB2-1507-000		1	TRAY, EXTENSION, 2	
14	XA9-0870-000		3	SCREW, M4X10	
15	RB2-1522-000		2	COVER, SCREW	

www.drukparts.pl

FIGURE 101 TOP COVER ASS'Y

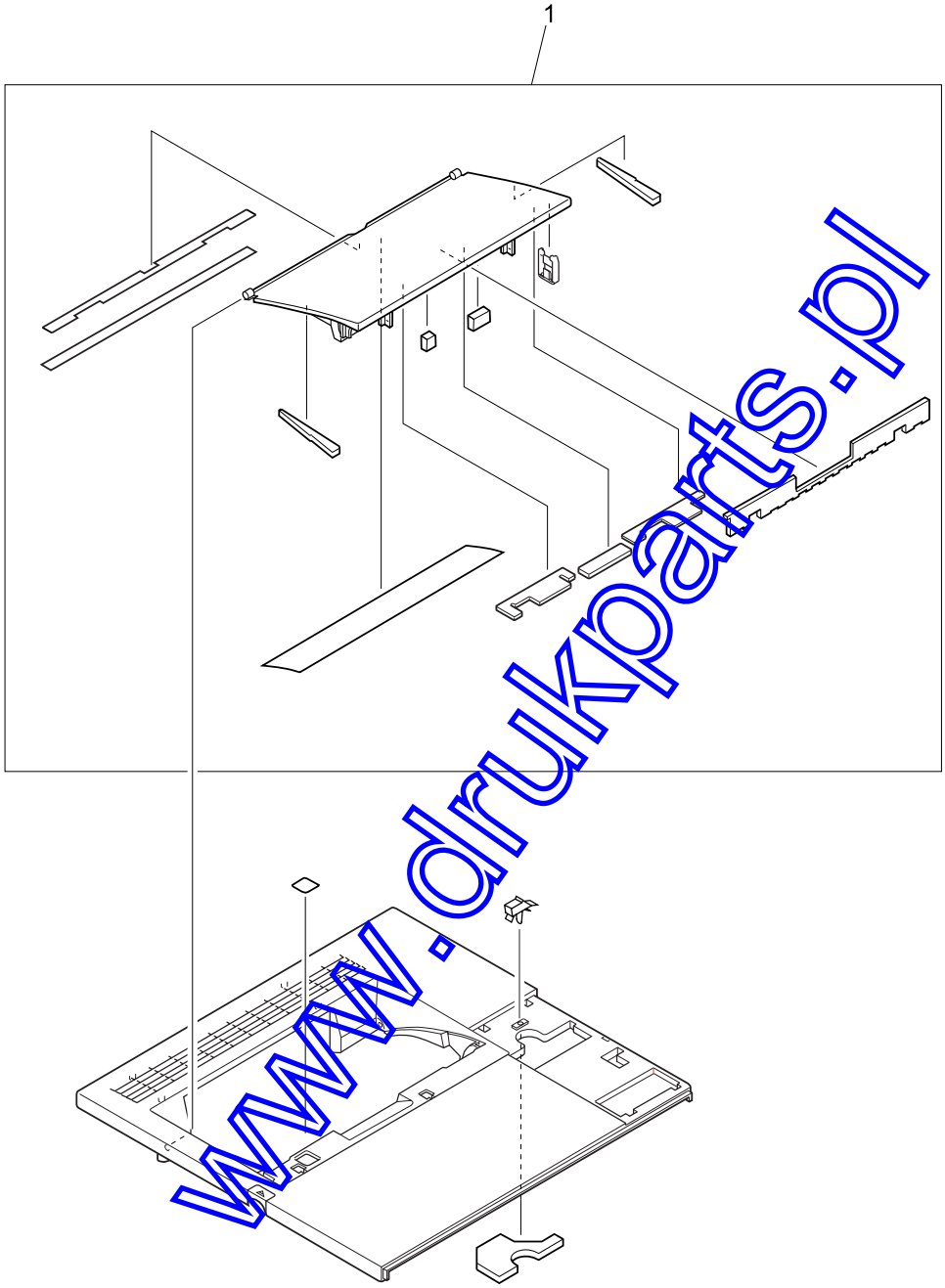

www.drukparts.pl

COPYRIGHT © 2000 CANON INC.
CANON CLBP-400 REV.0 MAY 2000 PRINTED IN JAPAN [IMPRIME AU JAPON]

FIGURE & KEY NO.	PART NUMBER	RANK	Q'TY	DESCRIPTION	SERIAL NUMBER / REMARKS
101 -	RG5-3302-020		1	TOP COVER ASS'Y	
1	RF5-2124-000		1	CARTRIDGE DOOR ASS'Y	

www.drukparts.pl

FIGURE 102 INTERNAL COMPONENTS 1

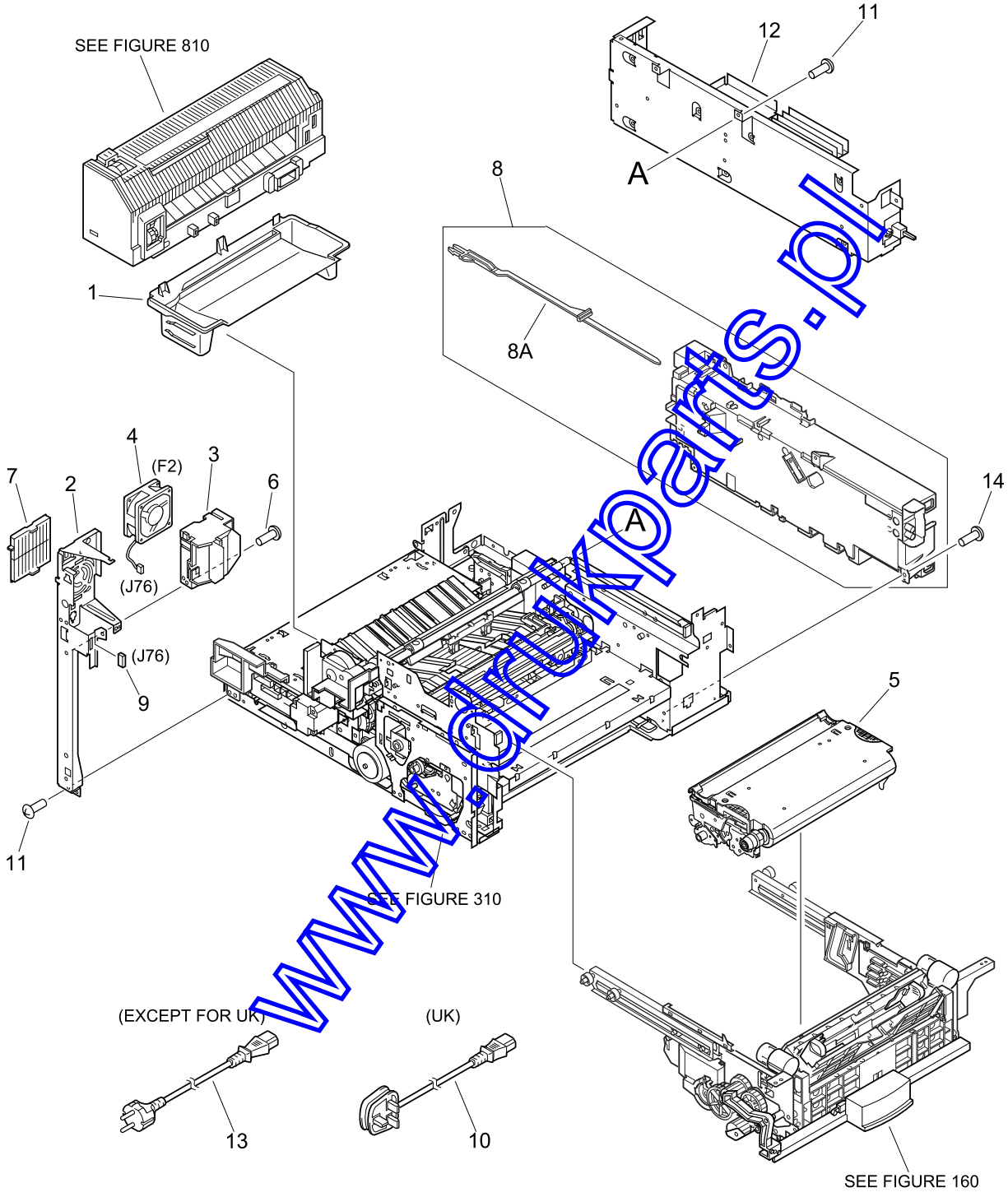

www.drukparts.pl

COPYRIGHT © 2000 CANON INC.
CANON CLBP-400 REV.0 MAY 2000 PRINTED IN JAPAN [IMPRIME AU JAPON]

FIGURE & KEY NO.	PART NUMBER	RANK	Q'TY	DESCRIPTION	SERIAL NUMBER / REMARKS
102 -	NPN		RF	INTERNAL COMPONENTS 1	
1	RB2-1008-000		1	TRAY, TONER	
2	RB2-1175-000		1	PLATE, FAN	
3	RB2-1281-000		1	HOLDER, FAN	
4	RH7-1407-000		1	FAN	F2, J76
5	RG5-5173-060		1	ITB ASS'Y	
6	XA9-1161-000		1	SCREW, W/WASHER, M3X8	
7	RB2-1283-000		1	FILTER, AIR	
8	RG5-5165-000		1	HIGH-VOLTAGE POWER SUPPLY	
8A	RB2-1556-000		1	STRAP, COVER SUPPORT	
9	VS1-5820-003		1	CONNECTOR, 3P	J76
10	RH2-5230-000		1	CORD, POWER	UK
11	XA9-1159-000		19	SCREW, TP, M3X6	
12	RH3-2220-000		1	LOW-VOLTAGE POWER SUPPLY ASS'Y	
13	RH2-5116-000		1	POWER CORD	EXCEPT FOR UK
14	XA9-0253-000		4	SCREW, MACH., PAN HEAD, M3X8	

www.drukparts.pl

FIGURE 103 INTERNAL COMPONENTS 2

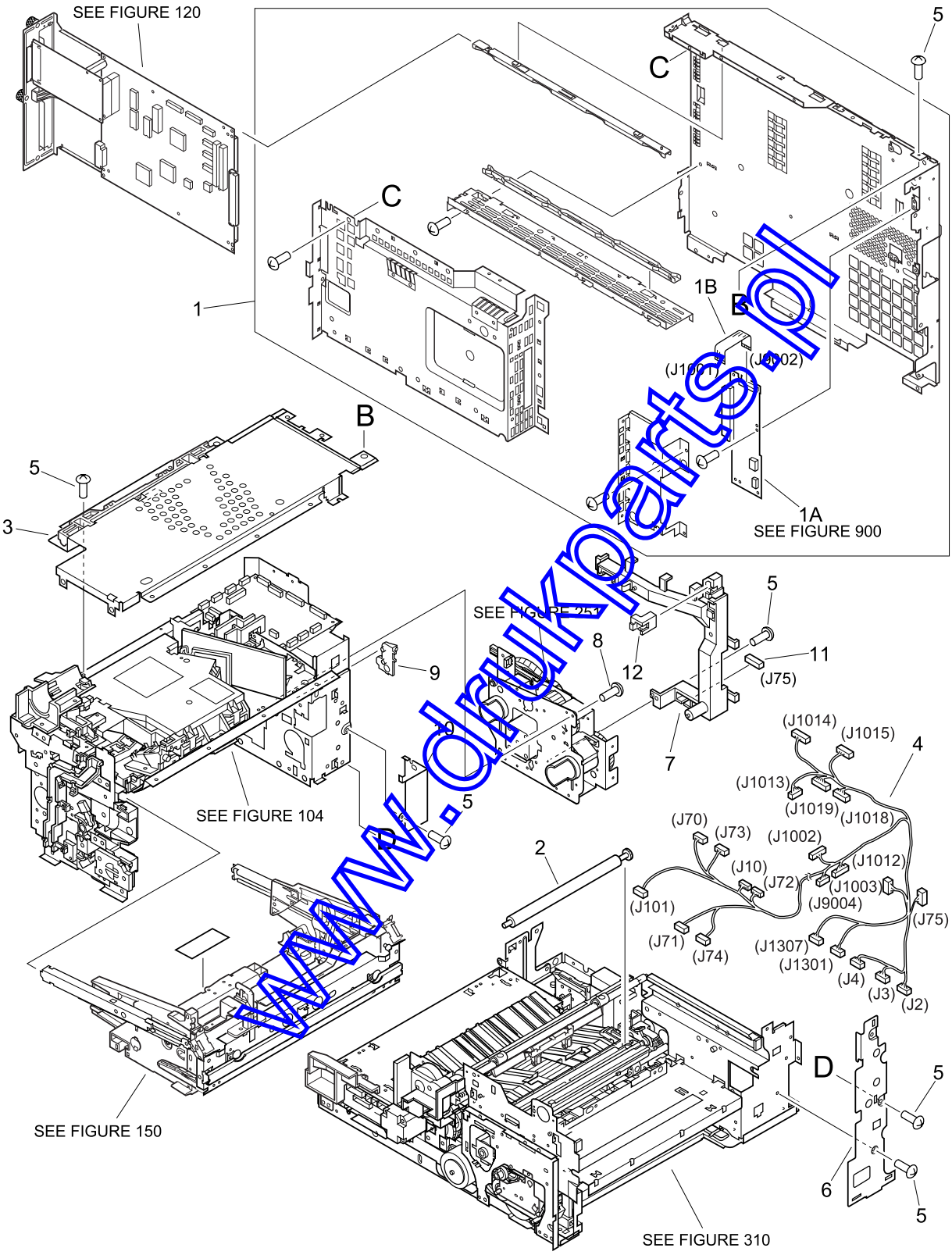

www.drukparts.pl

COPYRIGHT © 2000 CANON INC.
CANON CLBP-400 REV.0 MAY 2000 PRINTED IN JAPAN [IMPRIME AU JAPON]

FIGURE & KEY NO.	PART NUMBER	RANK	Q'TY	DESCRIPTION	SERIAL NUMBER / REMARKS
103 -	NPN		RF	INTERNAL COMPONENTS 2	
1	RG5-3287-000		1	SHIELD ASS'Y	
1A	RG5-3817-000		1	CONNECTOR PCB ASS'Y	SEE FIGURE 900
1B	RH2-5335-000		1	CABLE, FLAT, VIDEOINTERFACE	J1001, J9002
2	RF5-2112-000		1	ROLLER, TRANSFER	
3	RG5-3293-000		1	DC SHIELD ASS'Y	
4	RG5-5186-000		1	MAIN CABLE	J2-J4, J10, J70-J75, J101, J1002, J1003 J1012-J1015, J1018 J1019, J1301, J1307 J9004
5	XA9-1159-000		10	SCREW, TP, M3X6	
6	RB2-1535-000		1	PLATE	
7	RB2-1277-020		1	GUIDE, CABLE	
8	XA9-0922-000		6	SCREW, TP, M3X8	
9	RB2-1169-000		1	HOOK, LEFT	
10	RB2-1286-000		1	PLATE, COVER	
11	VS1-5820-008		1	CONNECTOR, 8P	J75
12	RB2-1278-000		1	BUTTON	

www.drukparts.pl

FIGURE 104 INTERNAL COMPONENTS 3

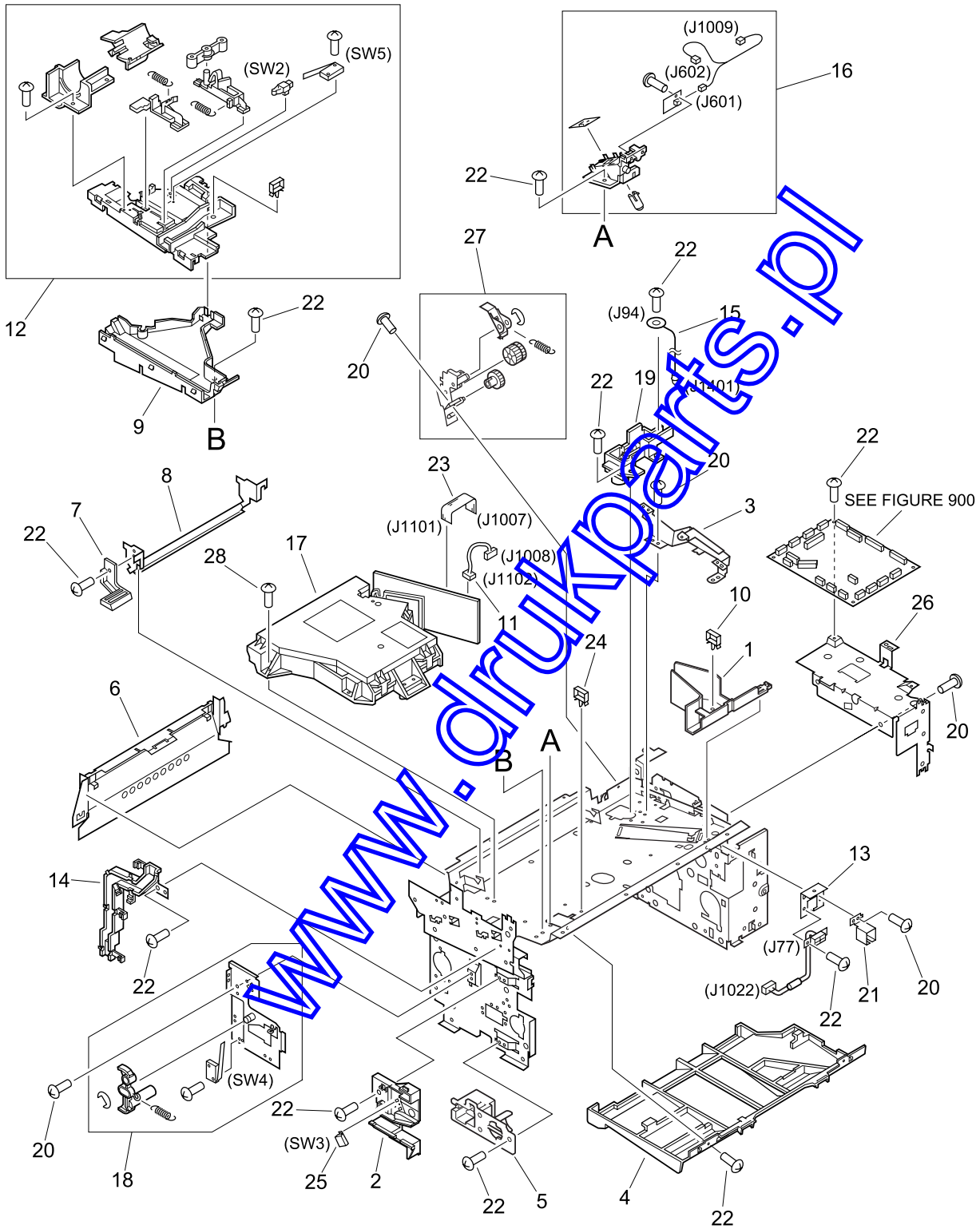

www.drukparts.pl

COPYRIGHT © 2000 CANON INC.
CANON CLBP-400 REV.0 MAY 2000 PRINTED IN JAPAN [IMPRIME AU JAPON]

FIGURE & KEY NO.	PART NUMBER	RANK	Q'TY	DESCRIPTION	SERIAL NUMBER / REMARKS
104 -	NPN		RF	INTERNAL COMPONENTS 3	
1	RB2-1591-000		1	GUIDE, CABLE	
2	RB2-1170-040		1	HOOK, LEFT	
3	RB2-1155-000		1	MOUNT, DC CONTROLLER PCB, B	
4	RB2-1156-000		1	COVER, SCANNER, LOWER	
5	RB2-5185-000		1	BUSHING	
6	RB2-5196-000		1	COVER, SHUTTER	
7	RB2-1172-000		1	ARM, SHUTTER	
8	RB2-1179-000		1	SHUTTER, LASER	
9	RB2-1456-000		1	GUIDE, CABLE	
10	WT2-0499-000		1	CLIP, CABLE	
11	RG5-3782-000		1	LASER CABLE	J1008, J1102
12	RG5-5170-000		1	DOOR SWITCH ASS'Y	
13	RB2-5212-000		1	MOUNT, CONNECTOR	
14	RB2-1180-000		1	COVER, CABLE	
15	RG5-5196-000		1	CABLE	J94, J1401
16	RG5-3292-000		1	WASTE TONER SENSOR ASS'Y	
17	RG5-5175-000		1	LASER/SCANNER ASS'Y	
18	RG5-3296-040		1	DRAWER SWITCH ASS'Y	
19	RG5-5162-000		1	PRIMARY H.V. TERMINAL ASS'Y	
20	XA9-1159-000		20	SCREW, TP, M3X6	
21	RB2-5213-000		1	CASE, CONNECTOR	
22	XA9-1161-000		10	SCREW, W/WASHER, M3X8	
23	RH2-5400-000		1	CABLE, FLAT, LASER	J1007, J1101
24	WT2-5424-000		1	CLIP, CABLE	
25	WC2-5330-000		1	MICROSWITCH	SW3
26	RF5-2144-000		1	MOUNT, DC CONTROLLER PCB, A	
27	RG5-5163-000		1	BRAKE ASS'Y	
28	XA9-1029-000		7	SCREW, W/WASHER, M3X12	

www.drukparts.pl

FIGURE 105 INTERNAL COMPONENTS 4

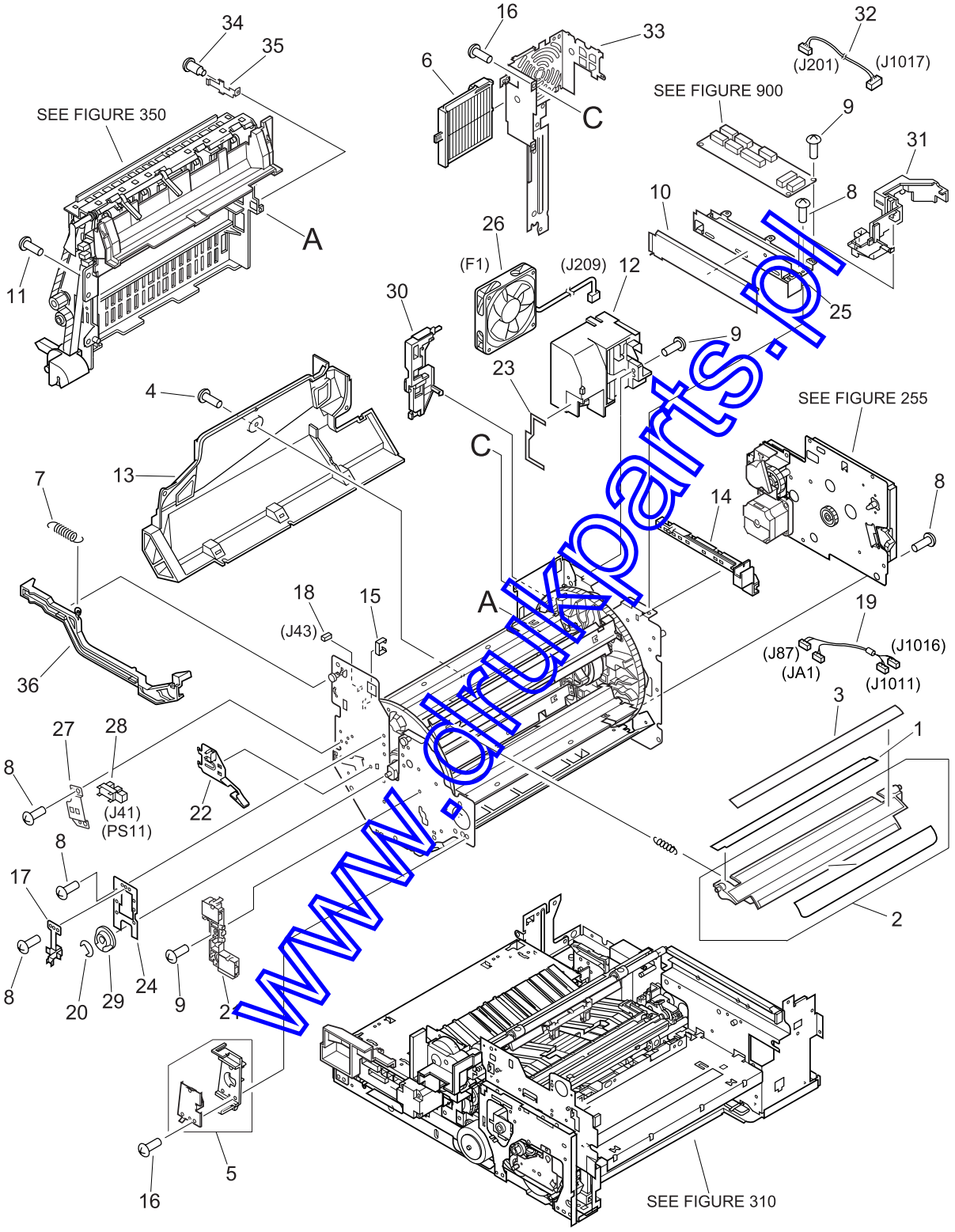

www.drukparts.pl

COPYRIGHT © 2000 CANON INC.
CANON CLBP-400 REV.0 MAY 2000 PRINTED IN JAPAN [IMPRIME AU JAPON]

FIGURE & KEY NO.	PART NUMBER	RANK	Q'TY	DESCRIPTION	SERIAL NUMBER / REMARKS
105 -	NPN		RF	INTERNAL COMPONENTS 4	
1	RB2-5219-000		4	SHEET, COVER	
2	RF5-3132-000		4	COVER	
3	RS5-8880-000		1	LABEL, ROTARY, Y	YELLOW
	RS5-8881-000		1	LABEL, ROTARY, M	MAGENTA
	RS5-8882-000		1	LABEL, ROTARY, C	CYAN
	RS5-8883-000		1	LABEL, ROTARY, BK	BLACK
4	XA9-0951-000		6	SCREW, W/WASHER, M3X8	
5	RG5-5169-000		1	DRUM BUSHING ASS'Y	
6	RB2-1282-030		1	FILTER, AIR	
7	RS5-2754-000		1	SPRING, TENSION	
8	XA9-1159-000		25	SCREW, TP, M3X6	
9	XA9-1161-000		7	SCREW, W/WASHER, M3X8	
10	RB2-5130-000		1	SHEET	
11	XA9-1161-000		3	SCREW, W/WASHER, M3X8	
12	RB2-1257-000		1	HOLDER, FAN	
13	RF5-3148-000		1	DUCT, FIXING	
14	RB2-1279-000		1	GUIDE, ROTARY	
15	WT2-5056-000		1	CLIP, CORD	
16	XA9-1159-000		4	SCREW, TP, M3X6	
17	RB2-0981-000		1	PLATE, GROUNDING	
18	VS1-5057-003		1	CONNECTOR, 3P	J43
19	RG5-3886-000		1	FIXING CONNECTOR CABLE	J87, J1011, J1016, JA1
20	XD9-0136-000		1	RING, E	
21	RG5-3355-000		1	TONER SENSOR ASS'Y	
22	RB2-0985-000		1	GUIDE, CABLE	
23	RB2-0977-000		1	SEAL, DUCT	
24	RB2-0966-000		1	PLATE, ROTARY	
25	RB2-0999-020		1	MOUNT, ROTARY CONTROLLER	
26	RH7-1435-000		1	FAN	F1, J209
27	RB2-0965-000		1	PLATE, SENSOR SUPPORT	
28	WG8-5362-000		1	PHOTO-INTERRUPTER, TLP1241	PS11, J41
29	RB2-0982-000		1	CAM, GROUNDING	
30	RB2-1280-000		1	HOLDER, FAN	
31	RB2-5173-000		1	GUIDE	
32	RG5-5187-000		1	DEVELOPER CABLE	J201, J1017
33	RB2-1263-030		1	PLATE, SHIELD	
34	RF5-0090-000		1	SCREW, STEPPED, M3	
35	RB2-0511-000		1	MOUNT, FACE-DOWN DELIVERY	
36	RB2-1284-000		1	ROD, DELIVERY	

www.drukparts.pl

FIGURE 120 VIDEO CONTROLLER ASS'Y

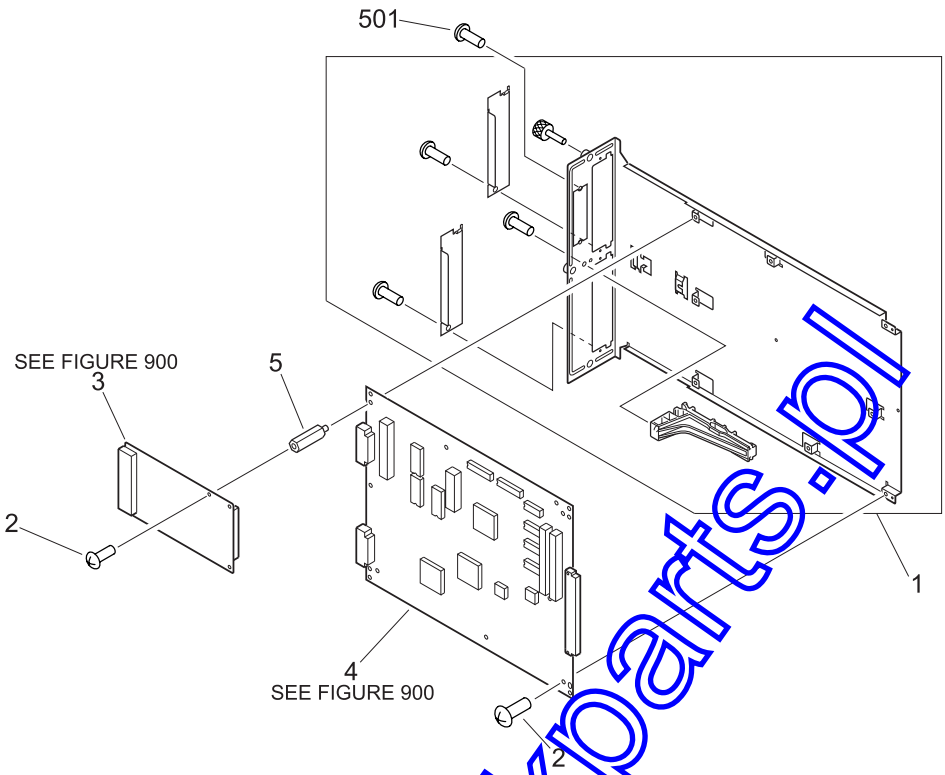

FIGURE & KEY NO.	PART NUMBER	RANK	Q'TY	DESCRIPTION	SERIAL NUMBER / REMARKS
120 -	RG5-5242-000		1	VIDEO CONTROLLER ASS'Y	
1	RF5-3169-000		1	PLATE, I/O	
2	XA9-1161-000		8	SCREW, W/WASHER, M3X8	
3	RG1-3893-000		1	INTERFACE PCB ASS'Y	SEE FIGURE 900
4	RG1-4029-000		1	VIDEO CONTROLLER PCB ASS'Y	SEE FIGURE 900
5	VT2-5159-025		1	SPACER, CARD	
501	XB1-1300-807		2	SCREW,MACH.,PAN HEAD,M3X8	

www.drukparts.pl

COPYRIGHT © 2000 CANON INC.
CANON CLBP-400 REV.0 MAY 2000 PRINTED IN JAPAN [IMPRIME AU JAPON]

www.drukparts.pl

FIGURE 150 UPPER DRAWER ASS'Y

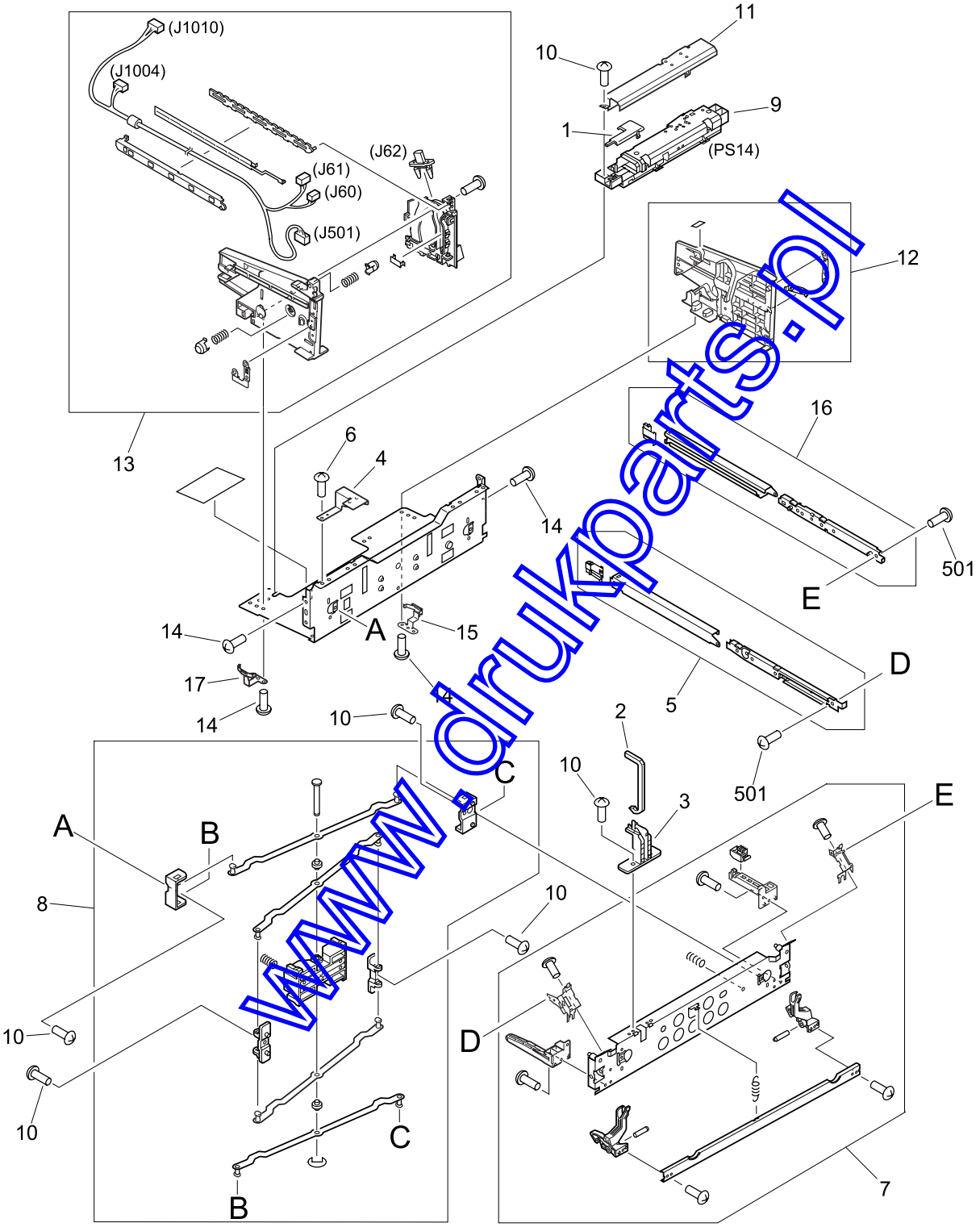

www.drukparts.pl

COPYRIGHT © 2000 CANON INC.
CANON CLBP-400 REV.0 MAY 2000 PRINTED IN JAPAN [IMPRIME AU JAPON]

FIGURE & KEY NO.	PART NUMBER	RANK	Q'TY	DESCRIPTION	SERIAL NUMBER / REMARKS
150 -	RG5-5142-050		1	UPPER DRAWER ASS'Y	
1	RB2-0916-000		1	COVER, CONNECTOR	
2	RB2-1113-000		1	GUIDE	
3	RB2-1114-000		1	HOLDER, GUIDE	
4	RB2-5209-000		1	PLATE, FRONT COVER GROUNDING	
5	RG5-5147-000		1	LEFT RAIL ASS'Y	
6	XA9-1159-000		4	SCREW, TP, M3X6	
7	RG5-5148-000		1	DOOR ASS'Y	
8	RG5-5234-020		1	LINK ASS'Y	
9	RG5-5149-000		1	DENSITY SENSOR ASS'Y	PS14
10	XA9-1161-000		8	SCREW, W/WASHER, M3X8	
11	RB2-5138-000		1	PLATE, GROUNDING	
12	RG5-5144-000		1	SIDE RIGHT PLATE ASS'Y	
13	RG5-5146-000		1	SIDE LEFT PLATE ASS'Y	
14	XA9-0591-000		10	SCREW, M3X8	
15	RB2-1598-000		1	PLATE, GROUNDING	
16	RG5-5145-000		1	RIGHT RAIL ASS'Y	
17	RB2-5199-000		1	PLATE, GROUNDING	
501	XB1-2400-407		2	SCREW,MACH.,TRUSS HEAD,M4X4	

www.drukparts.pl

FIGURE 160 MULTI-PURPOSE DRAWER ASS'Y (1/2)

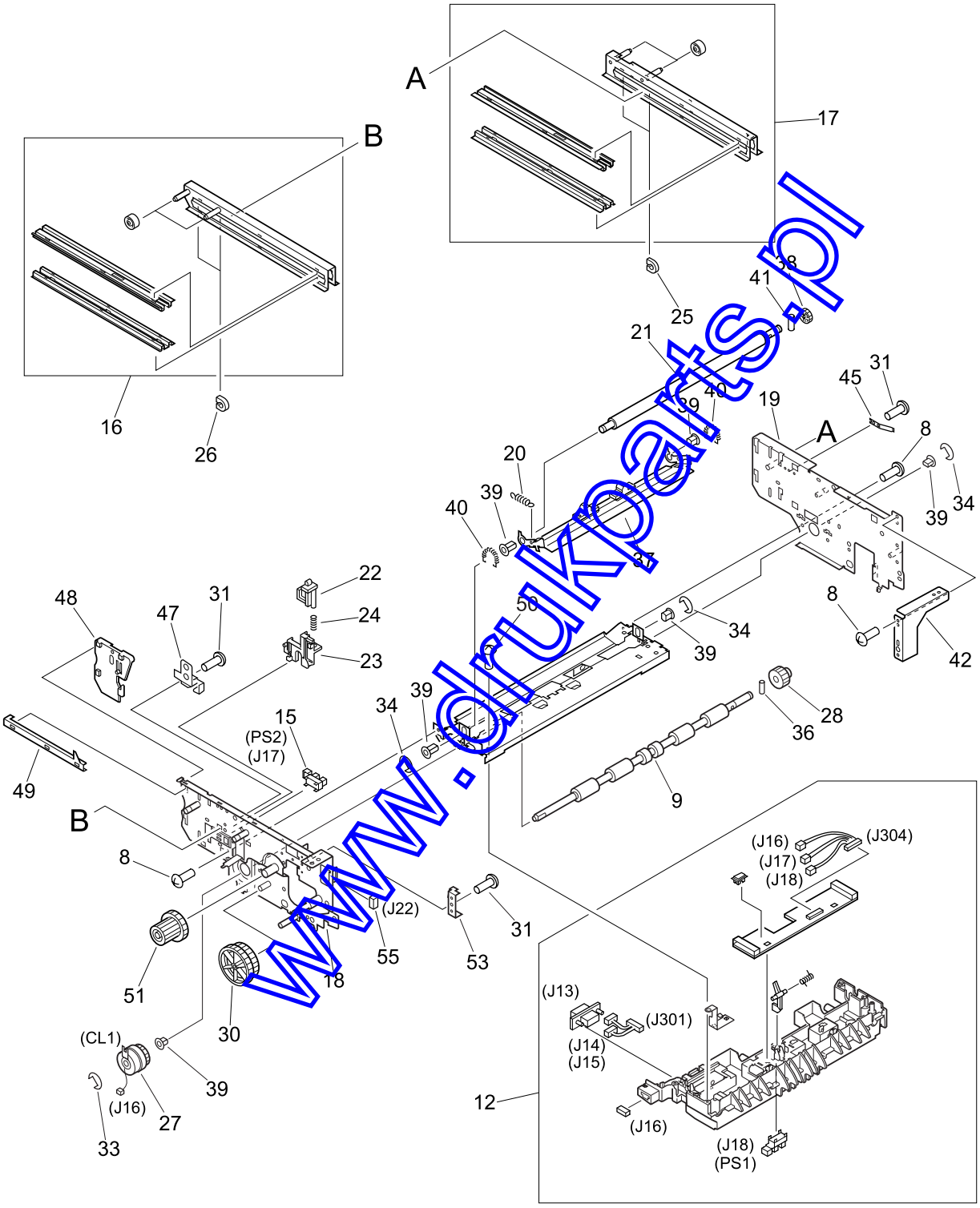

www.drukparts.pl

COPYRIGHT © 2000 CANON INC.
CANON CLBP-400 REV.0 MAY 2000 PRINTED IN JAPAN [IMPRIME AU JAPON]

FIGURE 160 MULTI-PURPOSE DRAWER ASS'Y (2/2)

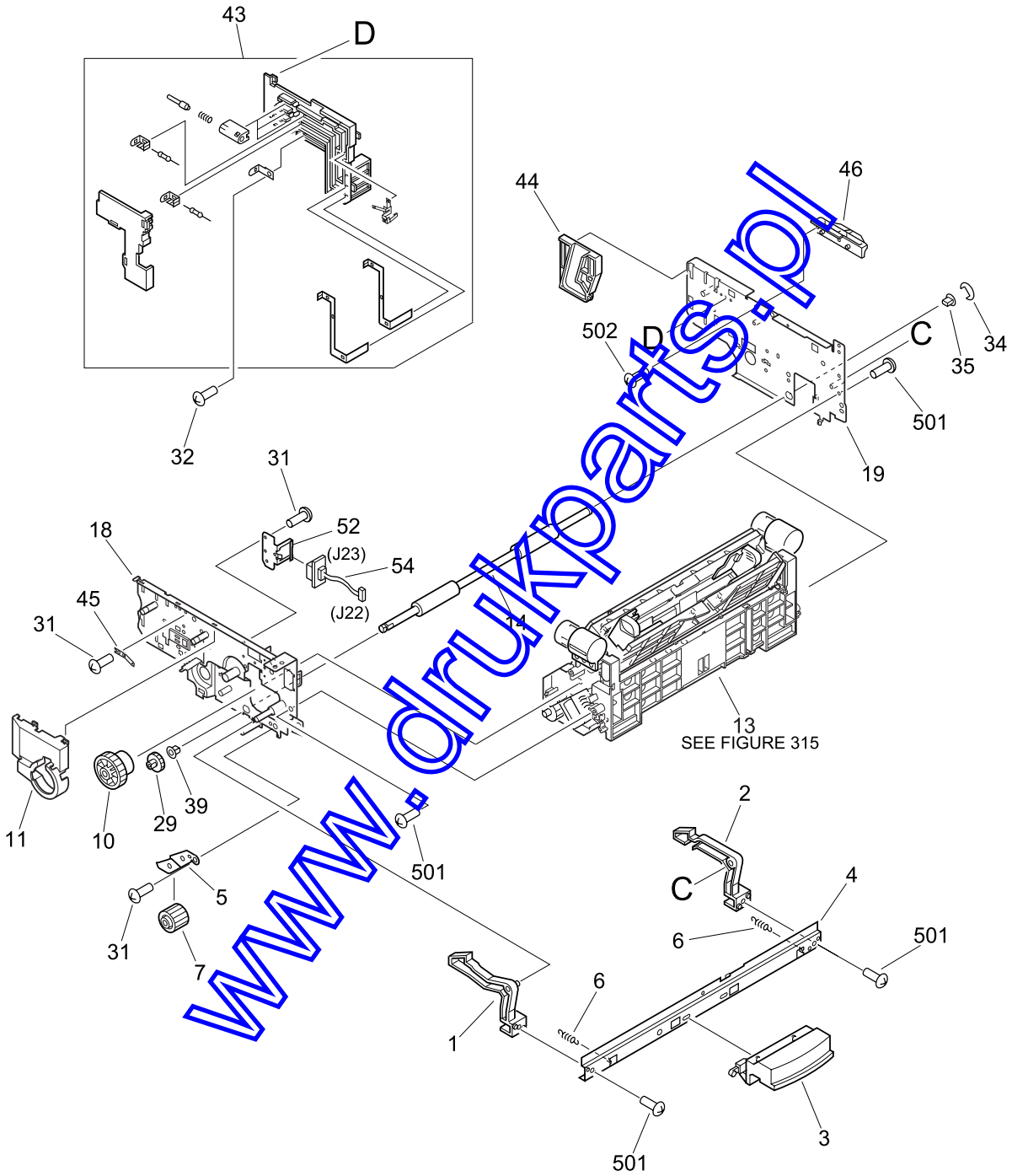

www.drukparts.pl

FIGURE & KEY NO.	PART NUMBER	RANK	Q'TY	DESCRIPTION	SERIAL NUMBER / REMARKS
160 -	RG5-5229-000		1	MULTI-PURPOSE DRAWER ASS'Y	
1	RB2-1359-020		1	LEVER, LOCK, LEFT	
2	RB2-1360-020		1	LEVER, LOCK, RIGHT	
3	RB2-1486-000		1	LEVER, LOCK	
4	RB2-1362-000		1	CROSSBAR, LOCK	
5	RB2-1409-000		1	COUPLER, GEAR	
6	RS5-2756-000		2	SPRING, TENSION	
7	RS6-0208-000		1	GEAR, 19T	
8	XA9-1159-000		5	SCREW, TP, M3X6	
9	RB2-5114-000		1	ROLLER, REGISTRATION	
10	RB2-0716-000		1	GEAR, 41T	
11	RB2-5120-000		1	COVER, GEAR	
12	RG5-5122-000		1	REGISTRATION FRAME ASS'Y	
13	RG5-5226-000		1	MP TRAY PAPER PICK-UP ASS'Y	SEE FIGURE 315
14	RB2-1358-000		1	ROLLER, PAPER FEED	
15	WG8-5362-000		1	PHOTO-INTERRUPTER, TLP1241	PS2, J17
16	RG5-3192-000		1	RAIL ASS'Y, LEFT	
17	RG5-3193-000		1	RAIL ASS'Y, RIGHT	
18	RF5-3127-000		1	PLATE, SLIDE, LEFT	
19	RF5-3126-000		1	PLATE, SLIDE, RIGHT	
20	RS6-2252-000		1	SPRING, TENSION	
21	RB2-5117-000		1	ROLLER, REGISTRATION	
22	RB2-1397-020		1	LEVER, SENSOR	
23	RB2-1396-000		1	HOLDER, LEVER	
24	RS5-2760-000		1	SPRING, COMPRESSION	
25	RB2-1391-000		2	HOLDER, STOP, RIGHT	
26	RB2-1392-000		2	HOLDER, STOP, LEFT	
27	RH7-5260-000		1	CLUTCH, ELECTROMAGNETIC	CL1, J16
28	RS6-0757-000		1	GEAR, 29T	
29	RS6-0207-000		1	GEAR, 18T	
30	RS6-0209-000		1	GEAR, 38T/46T	
31	XA9-1159-000		7	SCREW, TP, M3X6	
32	XA9-1161-000		1	SCREW, W/WASHER, M3X8	
33	XD9-0134-000		1	RING, E	
34	XD9-0136-000		1	RING, E	
35	RS5-1335-000		1	BUSHING	
36	XD9-0103-000		1	PIN, DOWEL	
37	RF5-3158-000		1	GUIDE, REGISTRATION	
38	RS5-0412-000		1	GEAR, 24T	
39	RS5-1333-000		7	BUSHING	
40	RS6-2249-000		2	SPRING, TENSION	
41	XD9-0111-000		1	PIN, DOWEL	
42	RB2-1424-000		1	MOUNT, COVER	
43	RG5-5124-000		1	DRAWER H.V. TERMINAL ASS'Y	
44	RB2-1372-000		1	GUIDE, RIGHT	
45	RB2-1421-000		2	PLATE, GROUNDING	
46	RB2-1371-000		1	PLATE, DRIVE RELEASE	
47	RB2-1418-000		1	PLATE, GROUNDING	
48	RB2-1379-000		1	GUIDE, SLIDE	
49	RB2-1410-000		1	LEVER, LOCK	

www.drukparts.pl

COPYRIGHT © 2000 CANON INC.
CANON CLBP-400 REV.0 MAY 2000 PRINTED IN JAPAN [IMPRIME AU JAPON]

FIGURE & KEY NO.	PART NUMBER	RANK	Q'TY	DESCRIPTION	SERIAL NUMBER / REMARKS
160 - 50	XA9-0591-000		4	SCREW, M3X8	
51	RS6-0758-000		1	GEAR, 25T/28T	
52	RB2-1393-020		1	MOUNT, CONNECTOR	
53	RB2-1413-020		1	SPRING, LEAF	
54	RG5-3791-000		1	ITB CONNECT CABLE	J22, J23
55	VS1-5057-003		1	CONNECTOR, 3P	J22
501	XB4-7401-009		8	SCREW,TAPPING,PAN HEAD,M4X10	
502	XB4-7400-809		1	SCREW,TAPPING,TRUSS HEAD,M4X8	

www.drukparts.pl

FIGURE 251 DRUM DRIVE ASS'Y

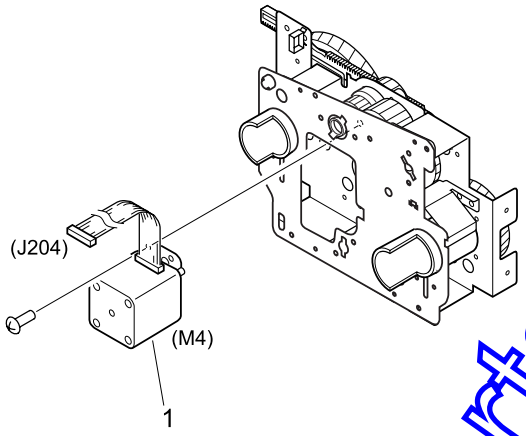

FIGURE & KEY NO.	PART NUMBER	RANK	Q'TY	DESCRIPTION	SERIAL NUMBER / REMARKS
251 -	RG5-5206-000		1	DRUM DRIVE ASS'Y	
1	RG5-5208-000		1	MOTOR ASS'Y	M4 J204

www.drukparts.pl

COPYRIGHT © 2000 CANON INC.
CANON CLBP-400 REV.0 MAY 2000 PRINTED IN JAPAN [IMPRIME AU JAPON]

FIGURE 255 ROTARY DRIVE ASS'Y

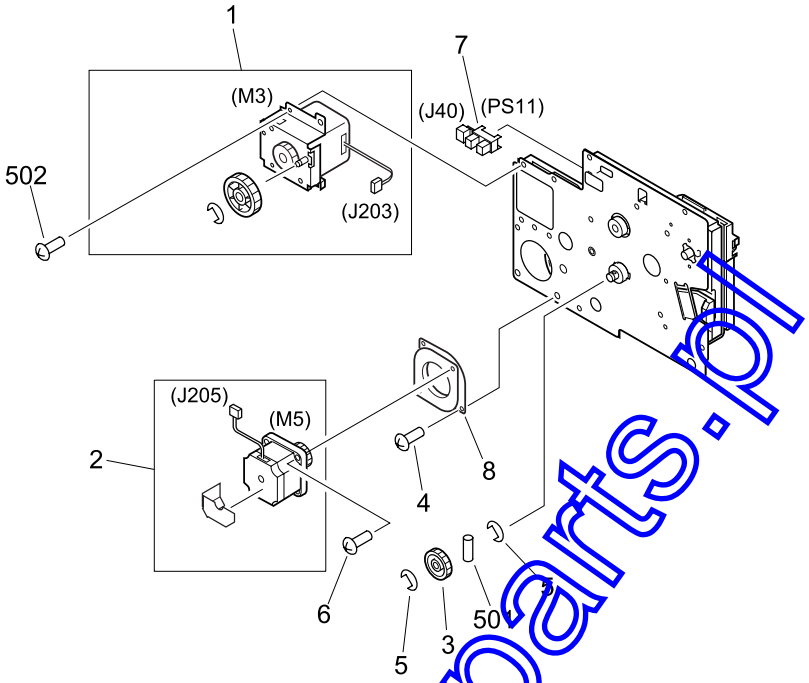

FIGURE & KEY NO.	PART NUMBER	RANK	Q'TY	DESCRIPTION	SERIAL NUMBER / REMARKS
255 -	RG5-5209-040		1	ROTARY DRIVE ASS'Y	
1	RG5-5201-000		1	ROTARY DRIVE MOTOR ASS'Y	M3 J203
2	RF5-2156-000		1	MOTOR, STEPPING	M5 J205
3	RS6-0186-020		1	GEAR, 31T	
4	XA9-1159-000		1	SCREW, TP, M3X6	
5	XD9-0137-000		2	RING, E	
6	XA9-0387-000		2	SCREW, W/WASHER, M4X8	
7	WG8-5362-000		1	PHOTO-INTERRUPTER, TLP1241	PS11, J40
8	RB2-0983-000		1	DAMPER, MOTOR	
501	XD9-0108-000		1	PIN, DOWEL	
502	XB5-6300-609		4	SCREW, MACHINE M3X6	

www.drukparts.pl

FIGURE 300 CASSETTE (250)

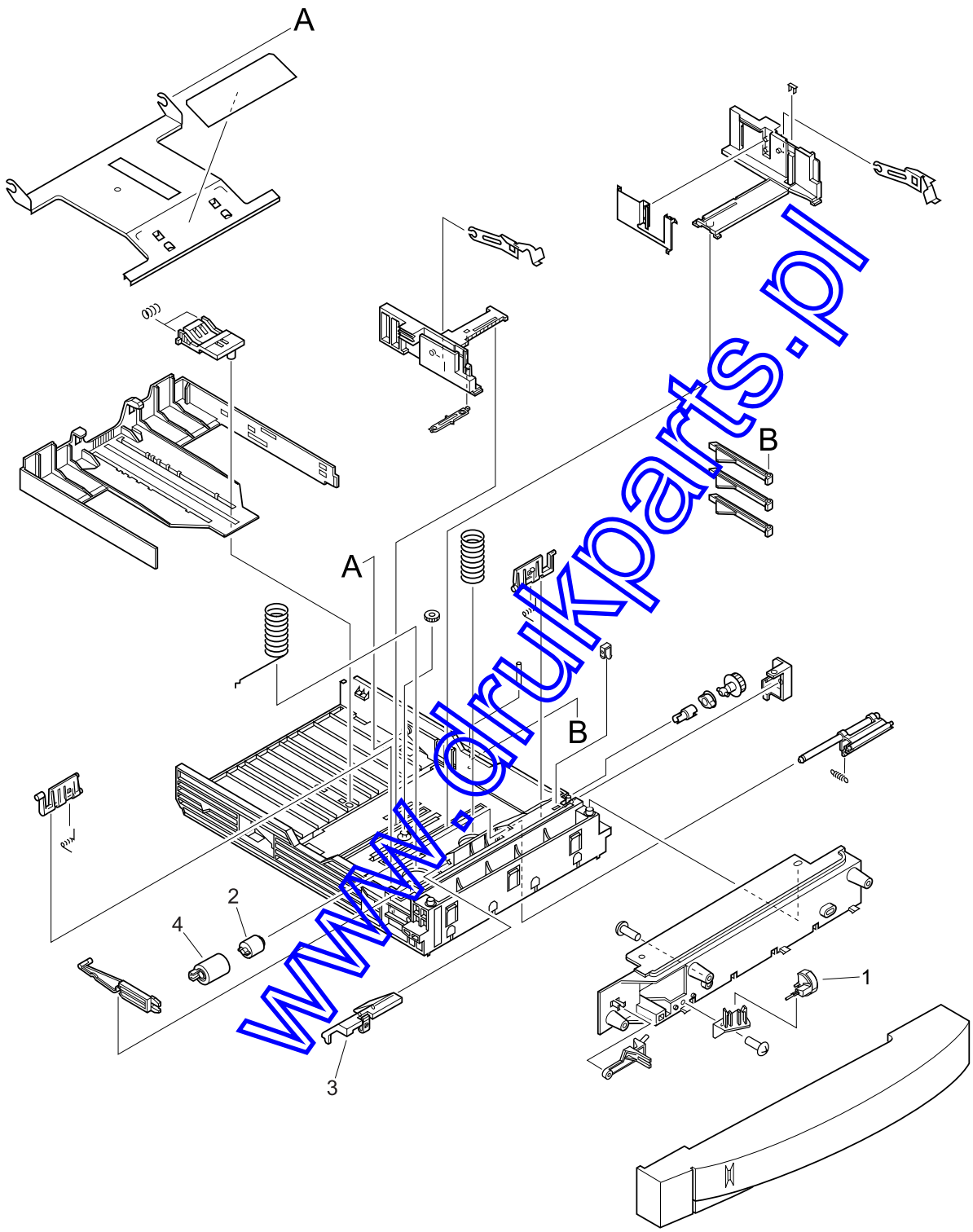

www.drukparts.pl

COPYRIGHT © 2000 CANON INC.
CANON CLBP-400 REV.0 MAY 2000 PRINTED IN JAPAN [IMPRIME AU JAPON]

FIGURE & KEY NO.	PART NUMBER	RANK	Q'TY	DESCRIPTION	SERIAL NUMBER / REMARKS
300 -	NPN		1	CASSETTE	250
1	RF5-2126-000		1	SENSOR, DRUM	
2	RB1-8974-000		1	LIMITER, TORQUE	
3	RB1-9001-000		1	COVER, ROLLER	
4	RF5-1885-000		1	ROLLER	

www.drukparts.pl

FIGURE 310 PAPER PICK-UP ASS'Y (1/3)

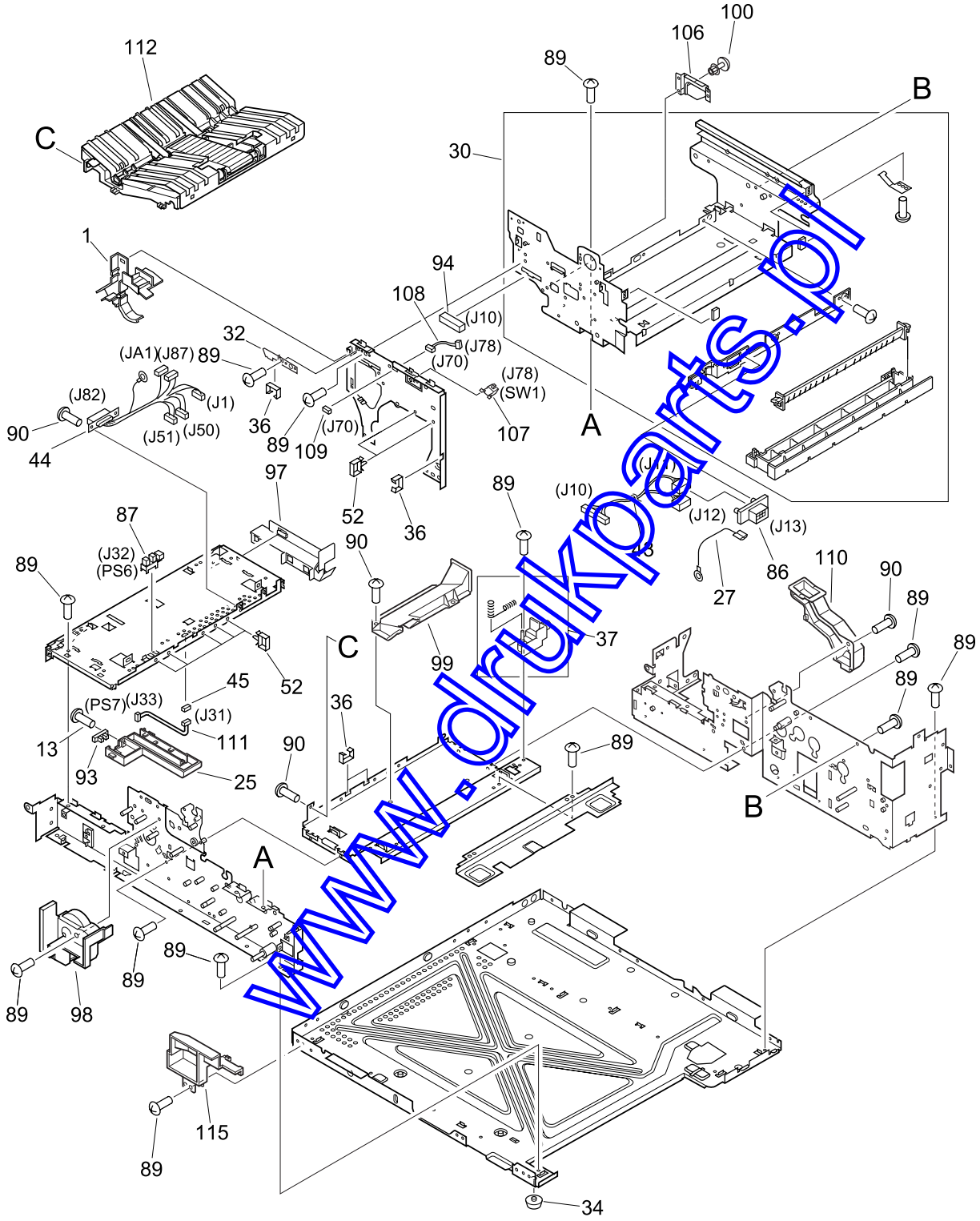

www.drukparts.pl

COPYRIGHT © 2000 CANON INC.
CANON CLBP-400 REV.0 MAY 2000 PRINTED IN JAPAN [IMPRIME AU JAPON]

FIGURE 310 PAPER PICK-UP ASS'Y (2/3)

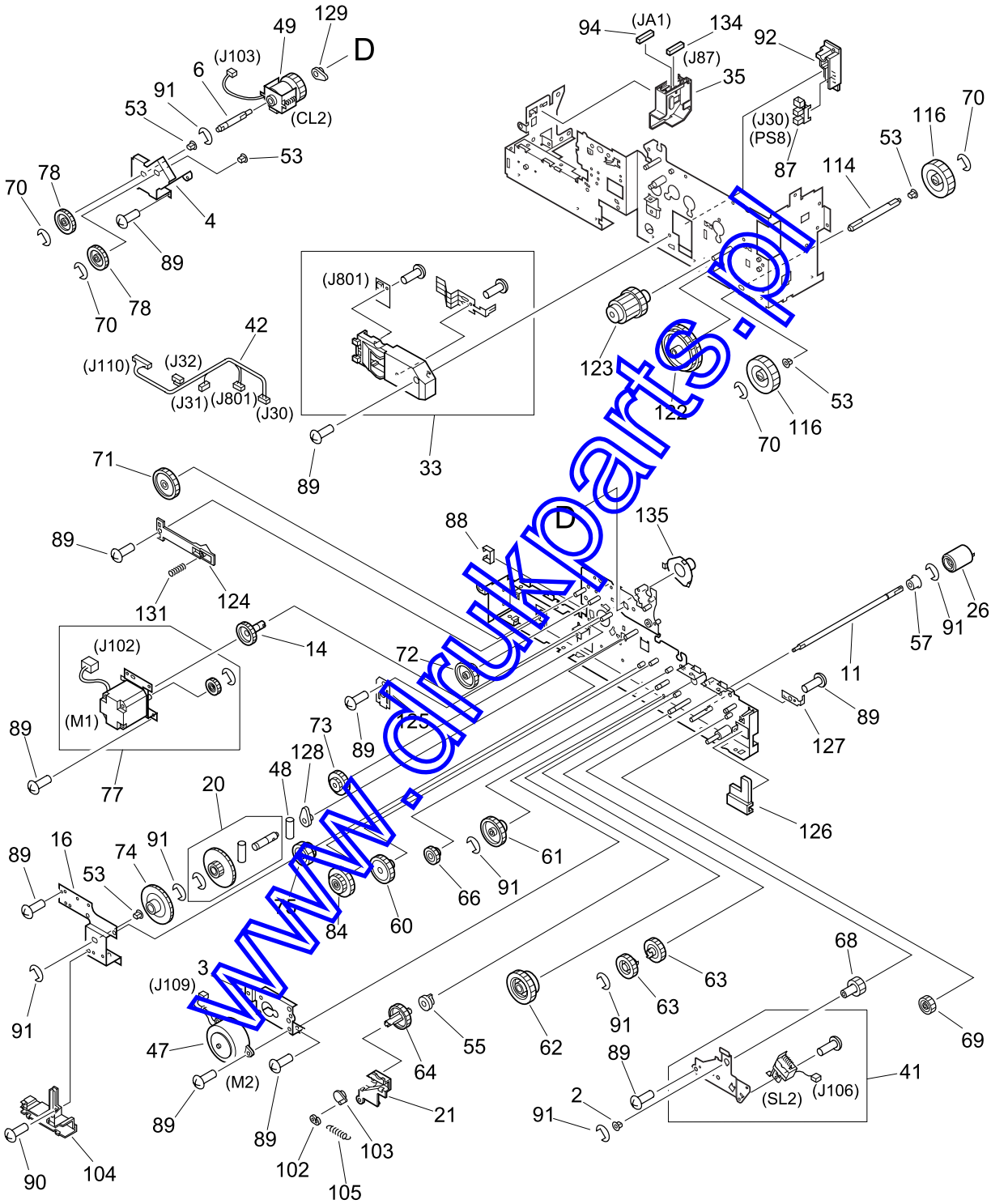

www.drukparts.pl

FIGURE 310 PAPER PICK-UP ASS'Y (3/3)

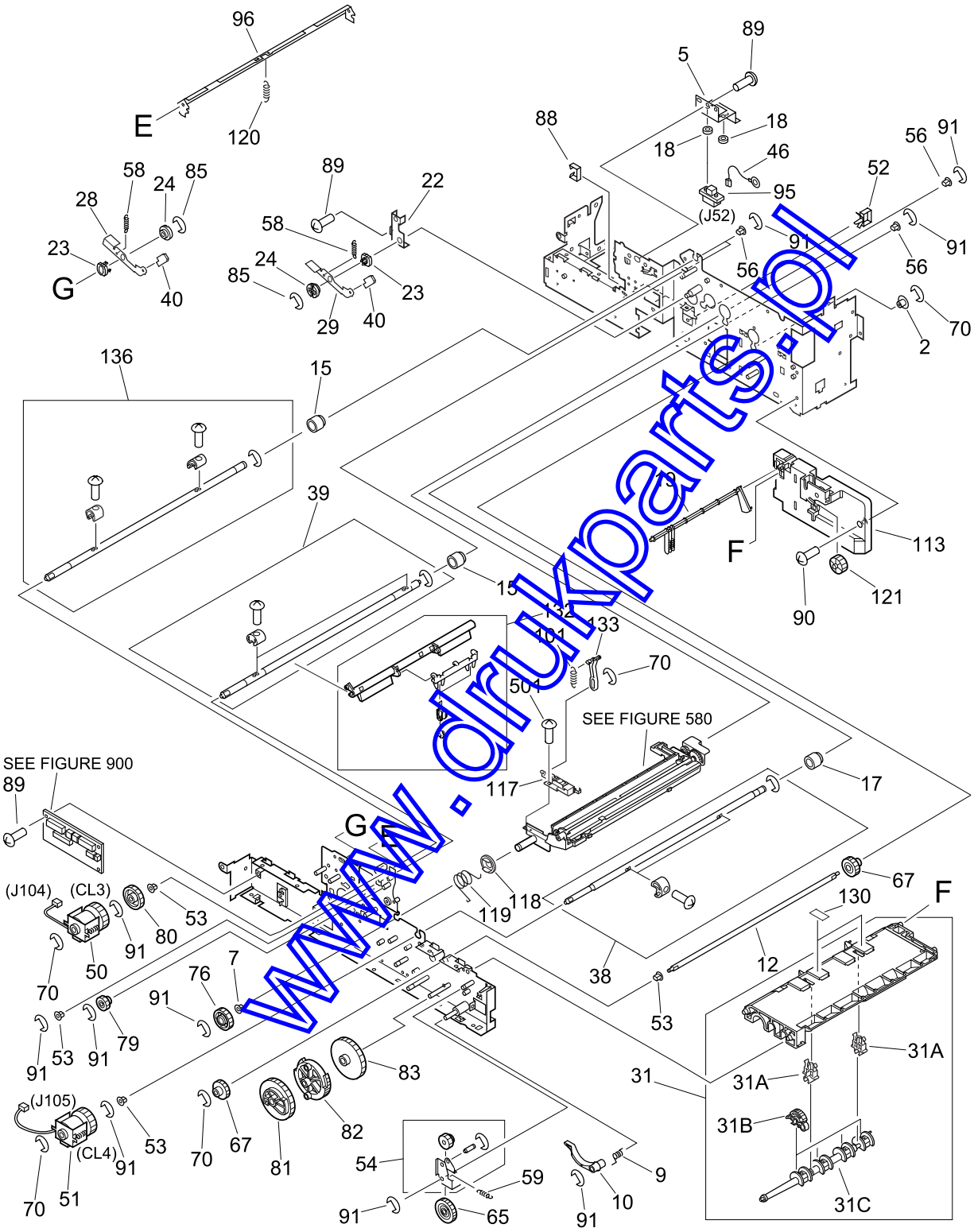

www.drukparts.pl

COPYRIGHT © 2000 CANON INC.
CANON CLBP-400 REV.0 MAY 2000 PRINTED IN JAPAN [IMPRIME AU JAPON]

FIGURE & KEY NO.	PART NUMBER	RANK	Q'TY	DESCRIPTION	SERIAL NUMBER / REMARKS
310 -	NPN		RF	PAPER PICK-UP ASS'Y	
1	RB2-1419-000		1	GUIDE, SUPPORT, LEFT	
2	FS1-1433-000		2	BUSHING	
3	RB2-0519-000		1	BRACKET, MOTOR	
4	RB2-0537-000		1	BRACKET	
5	RB2-0538-000		1	PLATE	
6	RB2-0539-000		1	SHAFT, DRIVE	
7	RS5-1344-000		1	BUSHING	
9	RB2-0542-000		1	SPRING, TORSION	
10	RB2-0543-000		1	LEVER	
11	RB2-0546-000		1	SHAFT, ROLLER	
12	RB2-0551-000		1	SHAFT	
13	XA9-0770-000		1	SCREW, M3X12	
14	RS6-0149-000		1	GEAR, 26T	
15	RB2-0561-000		2	CLUTCH, ONE-WAY	
16	RB2-0563-000		1	PLATE	
17	RB2-0572-000		1	CLUTCH, ONE-WAY	
18	RB2-0575-000		2	COLLAR	
19	RB2-0576-000		1	LEVER, SENSOR	
20	RF5-2161-000		1	GEAR, 18T/52T	
21	RB2-0601-000		1	GUIDE, GEAR	
22	RB2-0617-000		1	PLATE	
23	RB2-0830-000		2	BUSHING	
24	RB2-0831-000		2	HOLDER, PLATE	
25	RB2-0496-000		1	GUIDE, CABLE	
26	RF5-2092-020		1	ROLLER	
27	RG5-3884-000		1	CABLE	
28	RF5-2094-020		1	PLATE, LEFT	
29	RF5-2095-020		1	PLATE, RIGHT	
30	RG5-3205-050		1	RAIL, CROSSMEMBER ASS'Y	
31	RG5-3225-040		1	FRAME ASS'Y	
31A	RB1-8912-000		2	BUSHING	
31B	RB1-8865-000		4	ROLLER	
31C	RB2-0545-000		1	SHAFT, PICK-UP ROLLER	
32	RB2-0634-000		1	PLATE, HOLD CLUTCH	
33	RG5-3234-000		1	PAPER SIZE SENSOR ASS'Y	
34	XH9-0103-000		7	FOOT	
35	RB2-1303-000		1	HOLDER	
36	WT2-5056-000		4	CLIP, CORD	
37	RG5-5116-000		1	TRANSFER TERMINAL ASS'Y	
38	RG5-5118-000		1	SECONDARY TRANSFER CAM ASS'Y	
39	RG5-3241-020		1	DB ASS'Y	
40	RB2-1572-000		2	COVER, PLATE	
41	RG5-5119-000		1	SOLENOID ASS'Y	
42	RG5-3785-000		1	CABLE, PAPER FEED	J30-J32, J110, J801
43	RG5-3786-000		1	DRAWER CABLE	J10-J12
44	RG5-3787-000		1	FIXING/OPTION CABLE	J1, J50, J51, J82, J87, JA1
45	VS1-5057-003		1	CONNECTOR, 3P	J31
46	RG5-3881-000		1	GROUNDING CABLE	

www.drukparts.pl

FIGURE & KEY NO.	PART NUMBER	RANK	Q'TY	DESCRIPTION	SERIAL NUMBER / REMARKS
310 - 47	RH7-1343-000		1	MOTOR, STEPPING	M2, J109
48	XD9-0103-000		1	PIN, DOWEL	
49	RH7-5176-000		1	CLUTCH, ELECTROMAGNETIC	CL2, J103
50	RH7-5178-060		1	CLUTCH, ELECTROMAGNETIC	CL3, J104
51	RH7-5180-060		1	CLUTCH, ELECTROMAGNETIC	CL4, J105
52	WT2-0434-000		10	CLIP, CABLE	
53	RS5-1340-000		9	BUSHING	
54	RG5-3228-000		1	GEAR ASS'Y	
55	RS5-1293-000		1	BUSHING	
56	RS5-1497-000		4	BUSHING	
57	RS5-1339-000		1	BUSHING	
58	RS5-2733-000		2	SPRING, TENSION	
59	RS5-2768-000		1	SPRING, TENSION	
60	RS6-0132-000		1	GEAR, 35T	
61	RS6-0133-000		1	GEAR, 37T/14T	
62	RS6-0134-000		1	GEAR, 30T/16T	
63	RS6-0135-000		2	GEAR, 27T	
64	RS6-0136-000		1	GEAR, 31T	
65	RS6-0137-000		1	GEAR, 26T/18T	
66	RS6-0138-000		1	GEAR, 20T	
67	RS6-0139-000		2	GEAR, 18T	
68	RS6-0140-000		1	GEAR, 18T	
69	RS6-0141-000		1	GEAR, 19T	
70	XD9-0134-000		9	RING, E	
71	RS6-0143-000		1	GEAR, 37T	
72	RS6-0144-000		1	GEAR, 34T/15T	
73	RS6-0145-000		1	GEAR, 29T/15T	
74	RS6-0146-000		1	GEAR, 52T	
75	RS6-0147-000		1	GEAR, 41T	
76	RS6-0159-000		1	GEAR, 26T	
77	RG5-3227-000		1	FIXING MOTOR ASS'Y	
78	RS6-0150-020		2	GEAR, 29T	
79	RS6-0151-000		1	GEAR, 16T	
80	RS6-0152-000		1	GEAR, 29T	
81	RS6-0153-000		1	GEAR, 49T	
82	RS6-0154-000		1	GEAR, 39T/31T	
83	RS6-0155-000		1	GEAR, 53T	
84	RS6-0163-000		1	GEAR, 24T/37T	
85	XD9-0135-000		2	RING, E	
86	VS1-6174-014		1	CONNECTOR, 14P	J13
87	WG8-5309-000		2	PHOTO-DETECTOR,EE-SX1235A-P2	PS6, PS8, J32, J30
88	WT2-0204-000		2	CLIP, CABLE	
89	XA9-1159-000		56	SCREW, TP, M3X6	
90	XA9-1161-000		5	SCREW, W/WASHER, M3X8	
91	XD9-0136-000		18	RING, E	
92	RB2-1471-000		1	HOLDER, SENSOR	
93	FH7-7313-000		1	IC, EE-SX4009-P1	PS7, J33
94	VS1-5820-014		2	CONNECTOR, 14P	J10, JA1
95	VS1-6173-014		1	CONNECTOR, 14P	J52
96	RB2-0599-020		1	PLATE, REINFORCEMENT	

www.drukparts.pl

COPYRIGHT © 2000 CANON INC.
CANON CLBP-400 REV.0 MAY 2000 PRINTED IN JAPAN [IMPRIME AU JAPON]

FIGURE & KEY NO.	PART NUMBER	RANK	Q'TY	DESCRIPTION	SERIAL NUMBER / REMARKS
310 - 97	RB2-0598-000		1	GUIDE, CABLE	
98	RB2-1304-000		1	COVER, GEAR	
99	RB2-5170-000		1	DUCT, AIR	
100	XD9-0179-000		2	RIVET	
101	RS5-2800-000		1	SPRING, TENSION	
102	RB1-2190-000		1	COLLAR, SPRING	
103	RB2-0602-000		1	STOP, GEAR	
104	RB2-0603-000		1	GUIDE, CABLE	
105	RS5-2794-000		1	SPRING, TENSION	
106	RB2-1422-000		1	COVER, SWITCH	
107	WC2-5330-000		1	MICROSWITCH	SW1, J78
108	RG5-4651-000		1	ITB CONNECTOR CABLE	J70, J78
109	VS1-5057-002		1	CONNECTOR, 2P	J70
110	RB2-5168-000		1	DUCT, AIR	
111	RG1-3916-000		1	CABLE, DELIVERY SENSOR	J31, J33
112	RG5-5117-000		1	FEEDER ASS'Y	
113	RB2-0553-000		1	COVER, GEAR	
114	RB2-0560-000		1	SHAFT, DRIVE	
115	RB2-0604-000		1	COVER, PCB	
116	RS6-0158-000		2	GEAR, 17T	
117	RF5-3124-000		1	HOLDER, RESISTOR	
118	RB2-0635-000		1	FLANGE	
119	RB2-0633-000		1	SPRING, TORSION	
120	RS5-2799-000		1	SPRING, TENSION	
121	RS5-0940-000		1	GEAR, 20T	
122	RS6-0156-000		1	GEAR, 53T/46T	
123	RS6-0157-000		1	GEAR, 18T/14T	
124	RB2-0559-000		1	BLOCK	
125	RB2-0562-000		1	PLATE, SUPPORT	
126	RB2-0592-000		1	GUIDE, CASSETTE	
127	RB2-0593-000		1	PLATE	
128	RB2-0594-000		1	BUSHING	
129	RB2-0595-000		1	BUSHING	
130	RB2-0621-000		2	CUSHION	
131	RS5-2779-000		1	SPRING, COMPRESSION	
132	RG5-4696-020		1	ROWEL SWING ASS'Y	
133	RB2-0614-000		1	LINK, ROWEL	
134	VS1-5057-008	N	1	CONNECTOR, 8P	J87
135	RS5-4341-000		1	BUSHING	
136	RG5-3242-040		1	ICL ASS'Y	
501	XB1-2300-407		1	SCREW,MACH.,TRUSS HEAD,M3X4	

www.drukparts.pl

FIGURE 315 MP TRAY PAPER PICK -UP ASS'Y

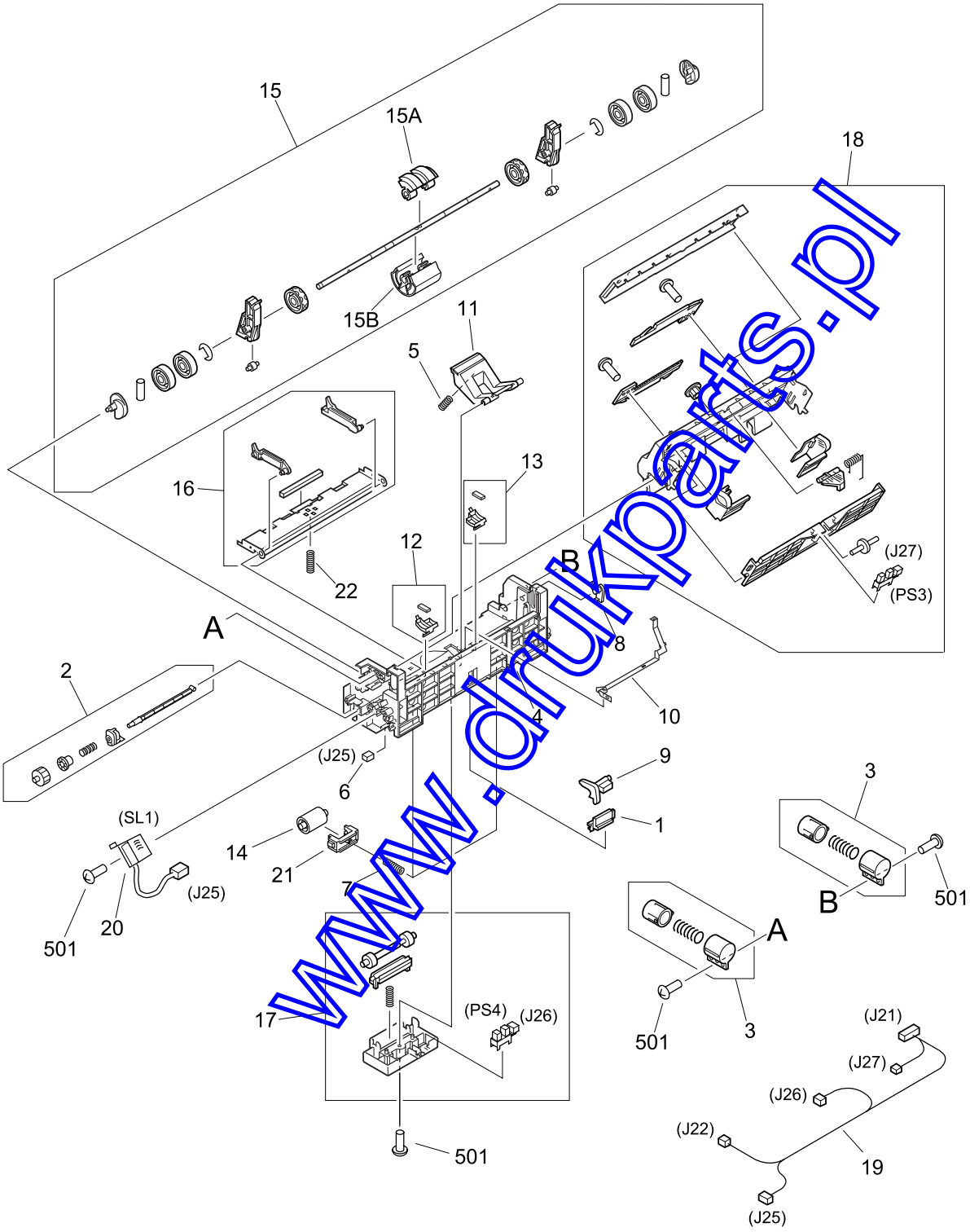

www.drukparts.pl

COPYRIGHT © 2000 CANON INC.
CANON CLBP-400 REV.0 MAY 2000 PRINTED IN JAPAN [IMPRIME AU JAPON]

FIGURE & KEY NO.	PART NUMBER	RANK	Q'TY	DESCRIPTION	SERIAL NUMBER / REMARKS
315 -	RG5-5226-000		1	MP TRAY PAPER PICK-UP ASS'Y	
1	RB1-7183-000		1	HOLDER, LEVER	
2	RG5-3221-000		1	FEEDER GEAR ASS'Y	
3	RG5-5125-000		2	ITB PRESSURE ASS'Y	
4	RB2-5125-000	N	1	FRAME, MULTI-PURPOSE	
5	RS5-2752-000		1	SPRING, COMPRESSION	
6	VS1-5057-002		1	CONNECTOR, 2P	J25
7	RS5-2751-000		2	SPRING, COMPRESSION	
8	RB2-0720-000		1	ARM	
9	RB2-0721-000		1	LEVER	
10	RB2-5126-000		1	PLATE, GROUNDING	
11	RB2-5221-000		1	HOLDER, SEPARATION PAD	
12	RF5-3149-000		1	CASE, PAD, LEFT	
13	RF5-3150-000		1	CASE, PAD, RIGHT	
14	RB2-0723-000		2	ROLLER	
15	RG5-5128-000		1	PAPER PICK-UP ROLLER ASS'Y	
15A	RB2-0717-000		1	ROLLER	
15B	RB2-0744-000		1	ROLLER	
16	RG5-3216-000		1	MIDDLE PLATE ASS'Y	
17	RG5-5129-000		1	ROLLER ASS'Y	
18	RG5-5225-000		1	TRAY ASS'Y	
19	RG5-5190-000		1	MP TRAY CABLE	J21, J22, J25-J27
20	RH7-5185-000		1	SOLENOID	SL1, J25
21	RB2-0724-000		2	HOLDER	
22	RS5-2750-000		1	SPRING, COMPRESSION	
501	XB4-7401-009		4	SCREW,TAPPING,PAN HEAD,M4X10	

www.drukparts.pl

FIGURE 350 FACE-DOWN DELIVERY ASS'Y

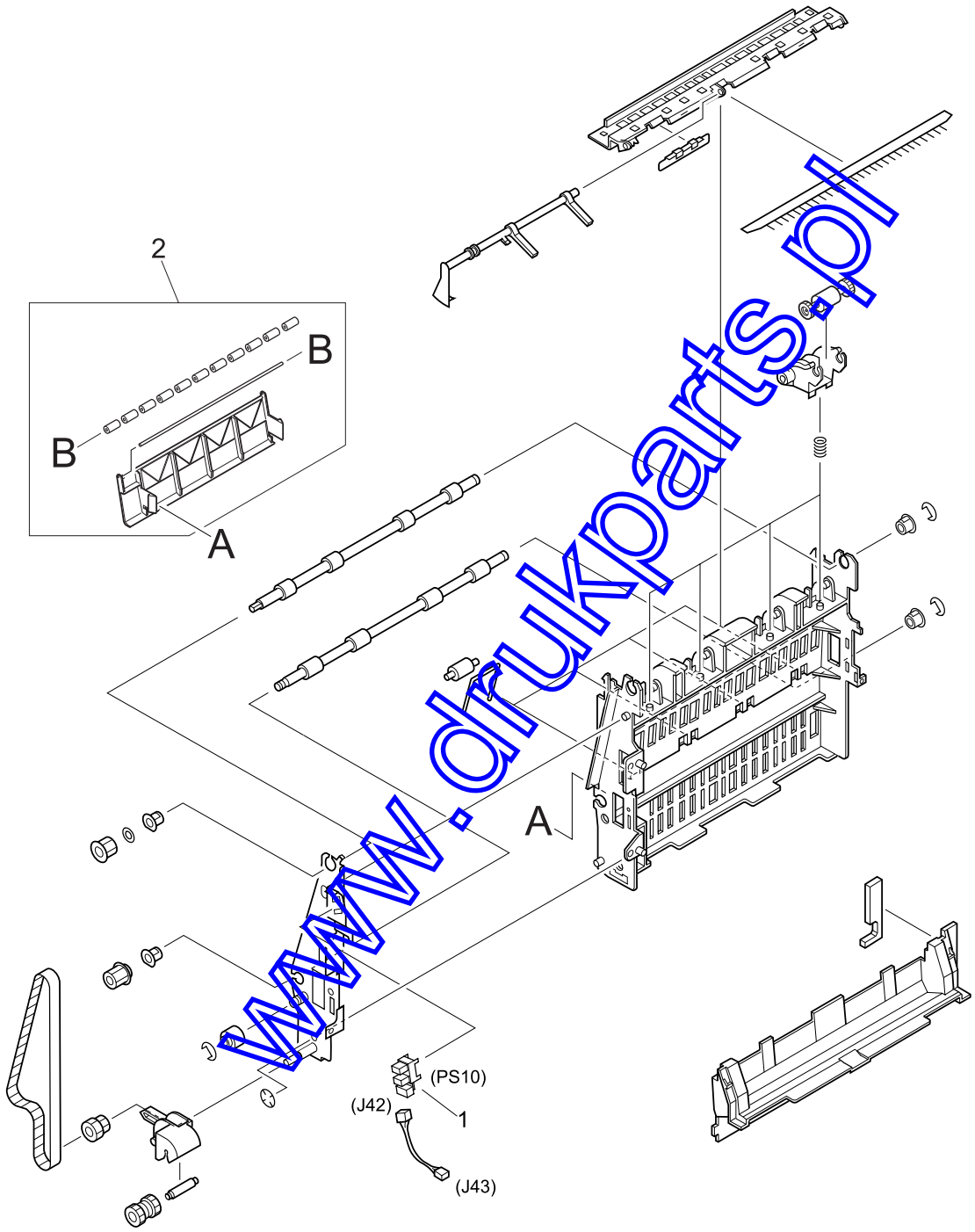

www.drukparts.pl

COPYRIGHT © 2000 CANON INC.
CANON CLBP-400 REV.0 MAY 2000 PRINTED IN JAPAN [IMPRIME AU JAPON]

FIGURE & KEY NO.	PART NUMBER	RANK	Q'TY	DESCRIPTION	SERIAL NUMBER / REMARKS
350 -	RG5-5235-000		1	FACE-DOWN DELIVERY ASS'Y	
1	WG8-5362-000		1	PHOTO-INTERRUPTER, TLP1241	PS10, J42
2	RG5-5251-000		1	FLAPPER GUIDE ASS'Y	

www.drukparts.pl

FIGURE 580 SECONDARY TRANSFER ASS'Y

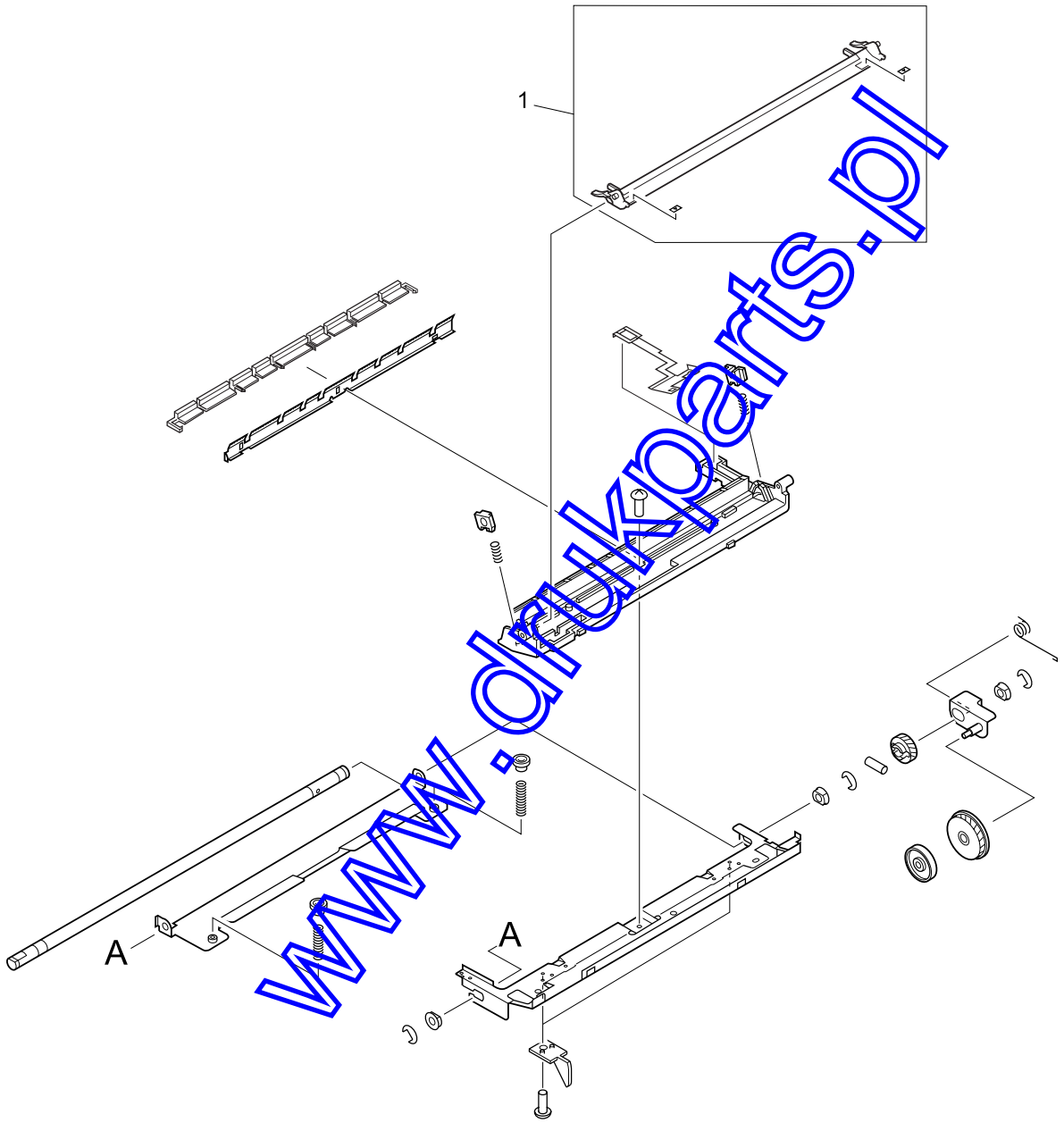

www.drukparts.pl

COPYRIGHT © 2000 CANON INC.
CANON CLBP-400 REV.0 MAY 2000 PRINTED IN JAPAN [IMPRIME AU JAPON]

FIGURE & KEY NO.	PART NUMBER	RANK	Q'TY	DESCRIPTION	SERIAL NUMBER / REMARKS
580 -	RG5-5115-000		1	SECONDARY TRANSFER ASS'Y	
1	RF5-2122-030		1	GUIDE, TRANSFER	

www.drukparts.pl

FIGURE 810 FIXING ASS'Y (1/2)

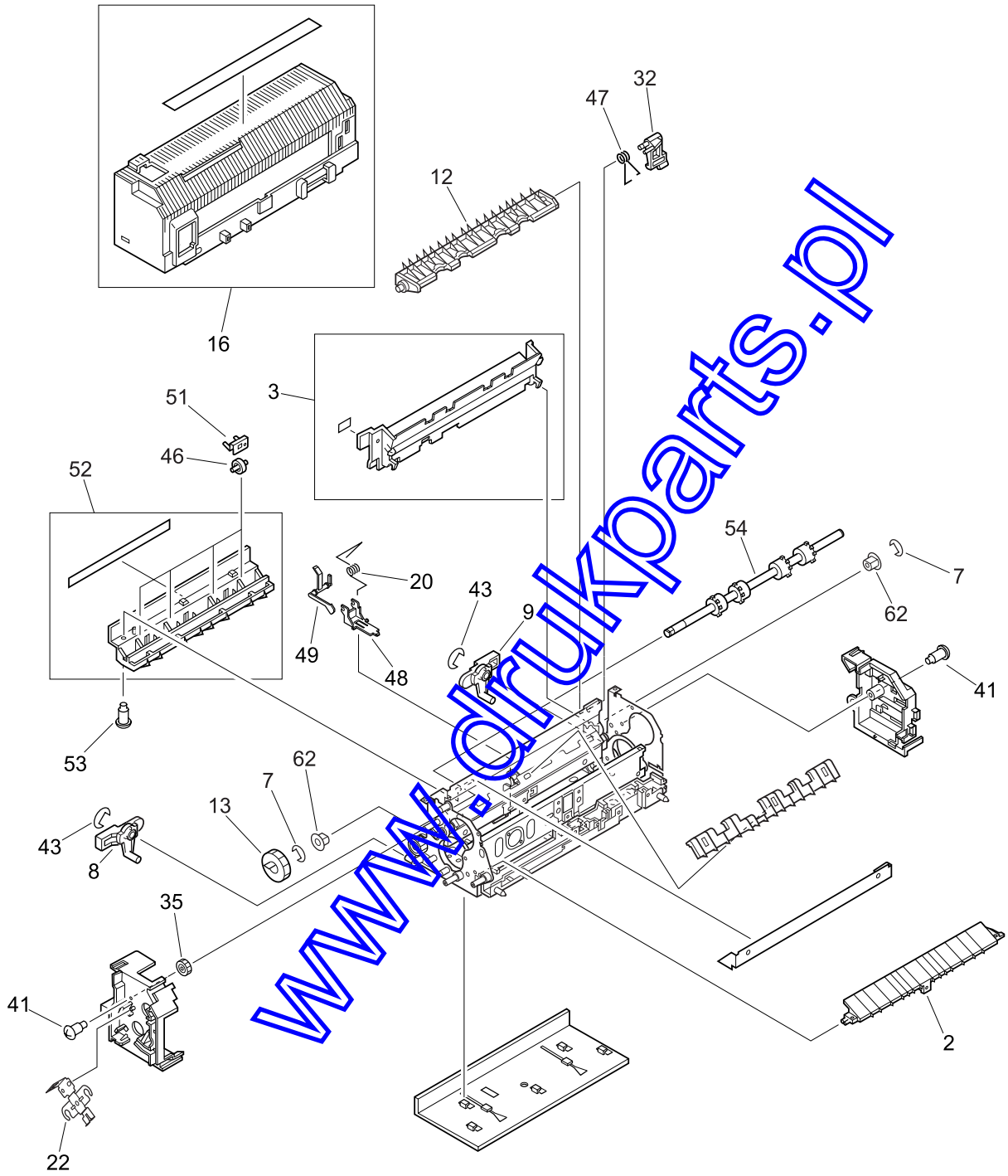

www.drukparts.pl

COPYRIGHT © 2000 CANON INC.
CANON CLBP-400 REV.0 MAY 2000 PRINTED IN JAPAN [IMPRIME AU JAPON]

FIGURE 810 FIXING ASS'Y (2/2)

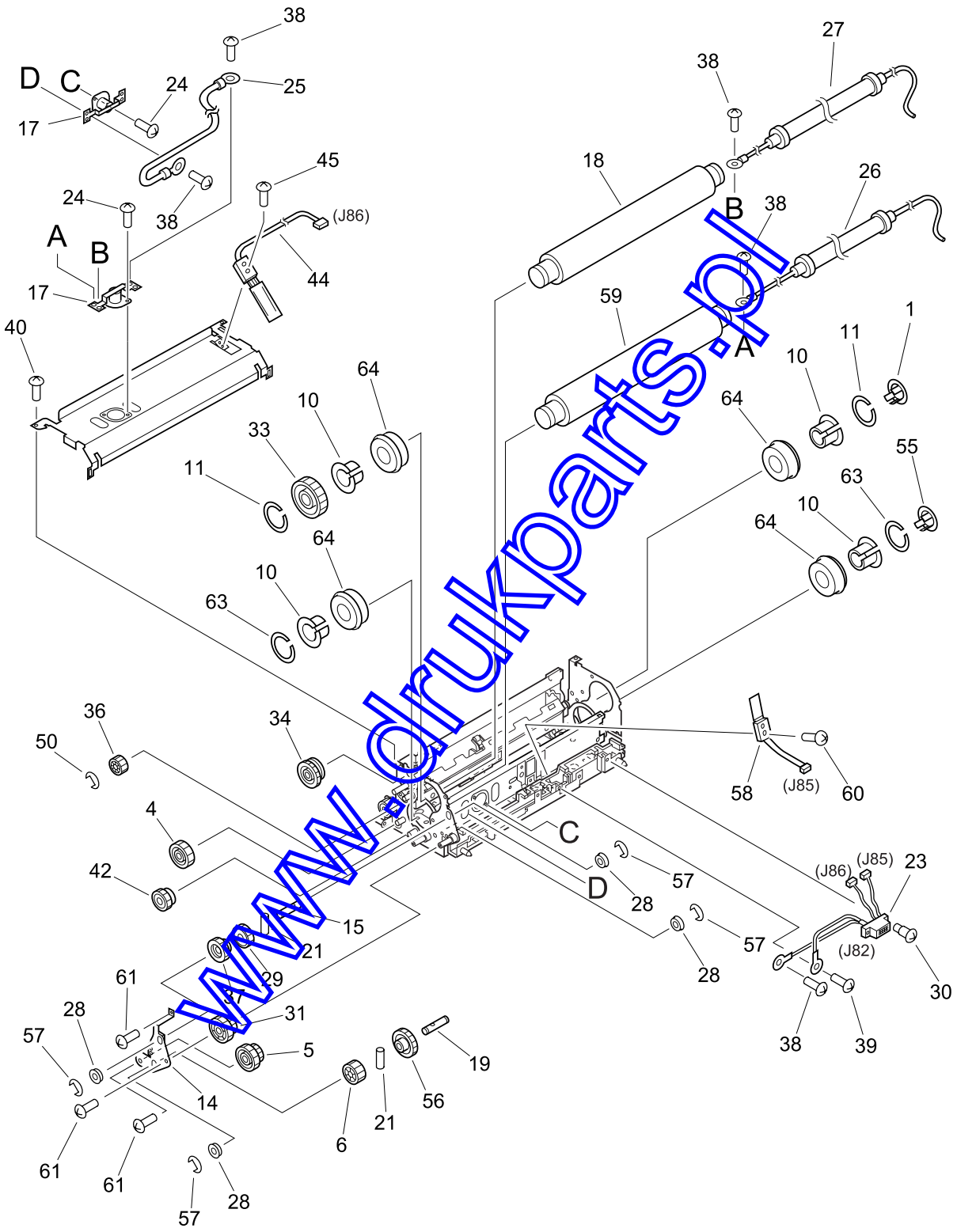

www.drukparts.pl

FIGURE & KEY NO.	PART NUMBER	RANK	Q'TY	DESCRIPTION	SERIAL NUMBER / REMARKS
810 -	RG5-5155-050		1	FIXING ASS'Y	
1	RB2-0427-000		1	RING, GROUNDING	
2	RB2-0434-000		1	GUIDE, PAPER ENTRANCE	
3	RF5-3168-000		1	GUIDE, LOWER	
4	RS6-0223-000		1	GEAR, 27T	
5	RS6-0221-000		1	GEAR, 26T	
6	RS6-0220-000		1	GEAR, 17T	
7	XD2-1200-402		2	RING, E	
8	RB2-0450-020		1	LEVER, LOCK, LEFT	
9	RB2-0451-020		1	LEVER, LOCK, RIGHT	
10	RB2-0453-020		4	BUSHING	
11	RB2-0458-000		2	RING, STOP	
12	RB2-0444-020		1	DEFLECTOR	
13	RS6-0196-000		1	GEAR, 15T	
14	RB2-0459-000		1	PLATE, SUPPORTING	
15	RB2-0488-000		1	SHAFT, ONE-WAY	
16	RF5-2103-000		1	COVER, UPPER	
17	RH7-7092-000		2	THERMOSWITCH	
18	RB2-0501-000		1	ROLLER, FIXING	
19	RB2-0489-000		1	SHAFT, ONE-WAY	
20	RB2-0497-000		1	SPRING, TORSION	
21	XD9-0104-000		2	PIN, DOWEL	
22	RB2-5162-000		1	HOLDER, HEATER	
23	RG5-3801-000		1	FIXING CABLE	J82-J86
24	XA9-0326-000		2	SCREW, TP, M3X4	
25	RG5-3880-000		1	FIXING CABLE, 2	
26	RH7-4112-000		1	HEATER, HALOGEN, 1	
27	RH7-4114-000		1	HEATER, HALOGEN, 2	
28	RS5-1343-000		4	BUSHING	
29	RS6-0198-000		1	GEAR, 23T	
30	RS1-9004-000		2	SCREW, STEPPED	
31	RS6-0217-000		1	GEAR, 20T/27T	
32	RB2-0445-020		1	LEVER, FLAPPER	
33	RS6-0195-000		1	GEAR, 41T	
34	RS6-0197-000		1	GEAR, 27T	
35	RS6-0199-000		1	GEAR, 23T	
36	RS6-0200-000		1	GEAR, 14T	
37	RS6-0218-000		1	GEAR, 23T	
38	XA9-1161-000		5	SCREW, W/WASHER, M3X8	
39	XA9-0500-000		1	SCREW, W/WASHER, M3X6	
40	XA9-1159-000		2	SCREW, TP, M3X6	
41	RF5-0716-000		3	SCREW, STEPPED, W/WASHER, M3	
42	RS6-0222-000		1	GEAR, 21T	
43	XD9-0136-000		2	RING, E	
44	RH7-7090-000		1	THERMISTOR ASS'Y	J86
45	XA9-1162-000		1	SCREW, W/WASHER, M3X10	
46	RB2-0452-000		4	ROLLER	
47	RB2-0454-000		1	SPRING, TORSION	
48	RB2-0495-020		1	HOLDER, FLAG	
49	RB2-0494-000		1	FLAG, SENSOR	

www.drukparts.pl

COPYRIGHT © 2000 CANON INC.
CANON CLBP-400 REV.0 MAY 2000 PRINTED IN JAPAN [IMPRIME AU JAPON]

FIGURE & KEY NO.	PART NUMBER	RANK	Q'TY	DESCRIPTION	SERIAL NUMBER / REMARKS
810 - 50	XD9-0135-000		1	RING, E	
51	RB2-0456-000		4	HOLDER, ROLLER	
52	RF5-2100-000		1	GUIDE, DELIVERY, UPPER	
53	RF5-0716-000		1	SCREW, STEPPED, W/WASHER, M3	
54	RB2-0421-000		1	ROLLER, DELIVERY	
55	RB2-0427-000		1	RING, GROUNDING	
56	RS6-0219-000		1	GEAR, 28T	
57	XD9-0136-000		4	RING, E	
58	RH7-7090-000		1	THERMISTOR ASS'Y	J85
59	RB2-0502-000		1	ROLLER, PRESSURE	
60	XA9-1162-000		1	SCREW, W/WASHER, M3X10	
61	XA9-1159-000		4	SCREW, TP, M3X6	
62	RS5-1331-000		2	BUSHING	
63	RB2-0458-000		2	RING, STOP	
64	XG9-0373-000		4	BEARING, BALL	

www.drukparts.pl

FIGURE 900 PCB ASS'Y LOCATION DIAGRAM

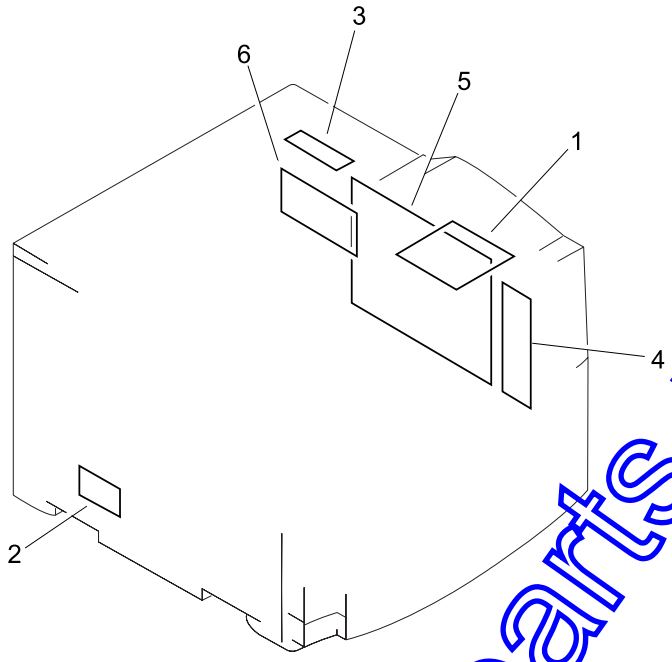

FIGURE & KEY NO.	PART NUMBER	RANK	Q'TY	DESCRIPTION	SERIAL NUMBER / REMARKS
900 -	NPN		RF	PCB ASS'Y LOCATION DIAGRAM	
1	RG5-5179-000		1	DC CONTROLLER PCB ASS'Y	
2	RG5-3810-000		1	PAPER FEED PCB ASS'Y	
3	RG5-5180-000		1	DEVELOPING PCB ASS'Y	
4	RG5-3817-000		1	CONNECTOR PCB ASS'Y	
5	RG1-4029-000		1	VIDEO CONTROLLER PCB ASS'Y	
6	RG1-3893-000		1	INTERFACE PCB ASS'Y	

www.drukparts.pl

COPYRIGHT © 2000 CANON INC.
CANON CLBP-400 REV.0 MAY 2000 PRINTED IN JAPAN [IMPRIME AU JAPON]

DUPLEX UNIT

DUPLEX UNIT
[R96-5006]

www.drukparts.pl

COPYRIGHT © 2000 CANON INC.
CANON CLBP-400 REV.0 MAY 2000 PRINTED IN JAPAN [IMPRIME AU JAPON]

FIGURE SA ASSEMBLY LOCATION DIAGRAM

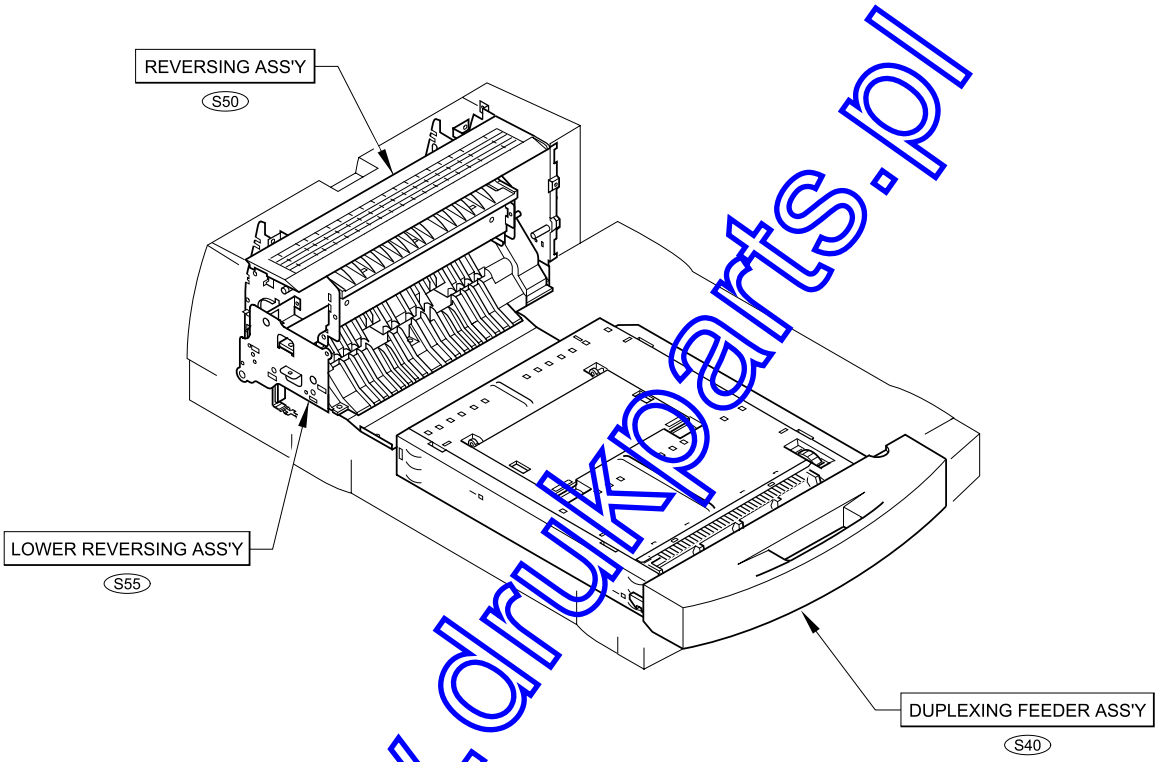

www.drukparts.pl

FIGURE S11 DUPLEX UNIT MAIN BODY (1/2)

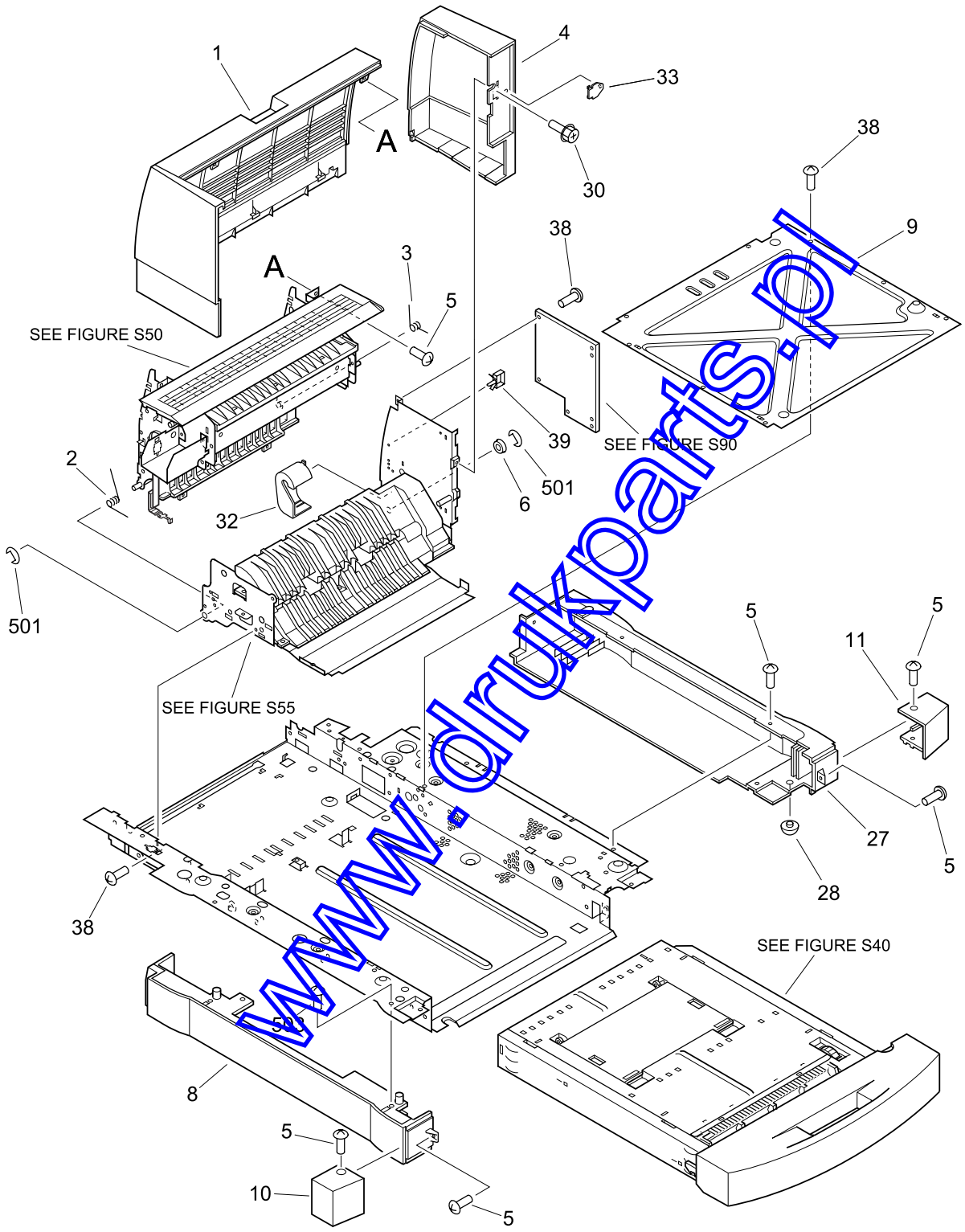

www.drukparts.pl

COPYRIGHT © 2000 CANON INC.
CANON CLBP-400 REV.0 MAY 2000 PRINTED IN JAPAN [IMPRIME AU JAPON]

FIGURE S11 DUPLEX UNIT MAIN BODY (2/2)

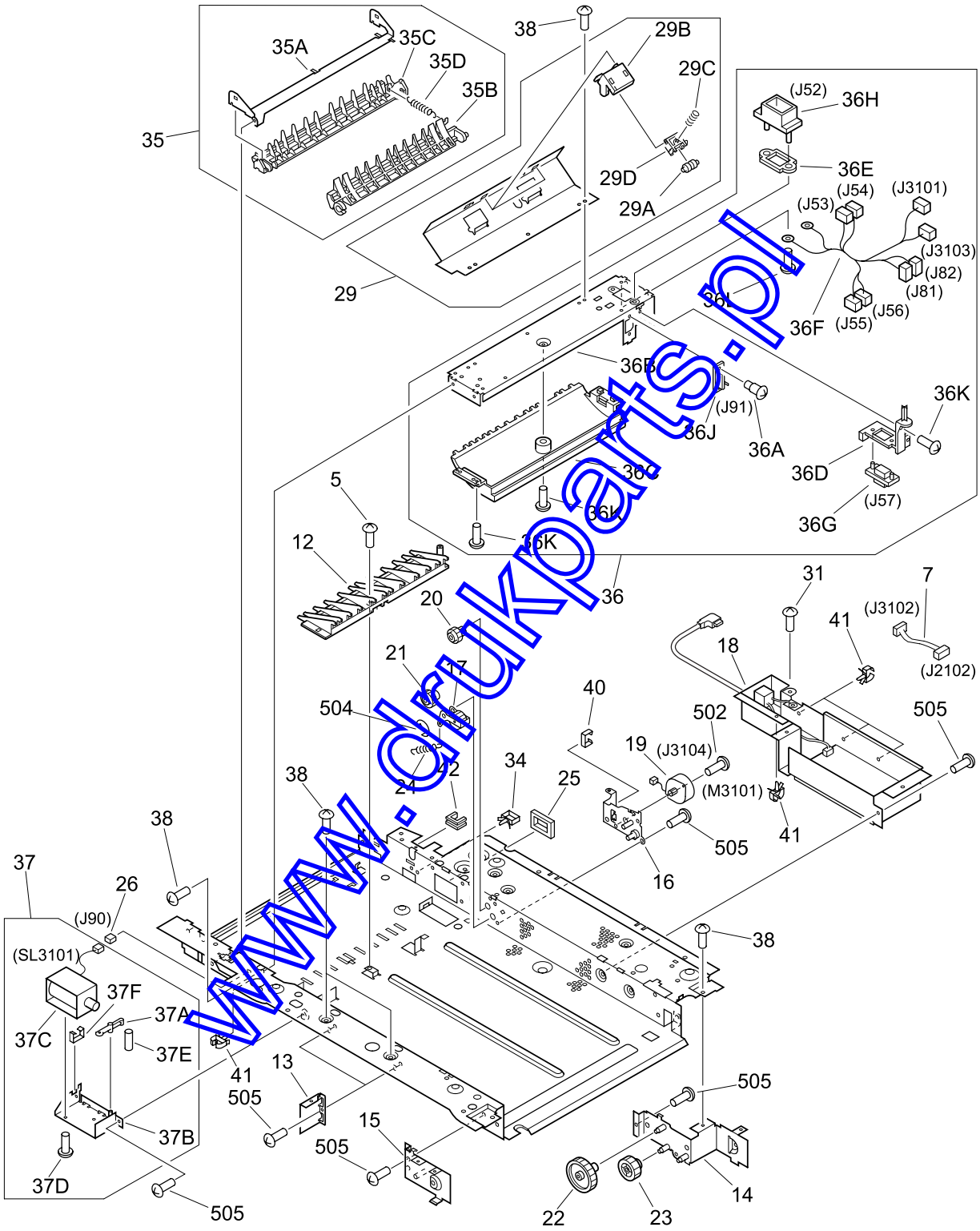

www.dukparts.pl

FIGURE & KEY NO.	PART NUMBER	RANK	Q'TY	DESCRIPTION	SERIAL NUMBER / REMARKS
S11 -	NPN		RF	DUPLEX UNIT MAIN BODY	
1	RB2-2719-000		1	COVER, REAR	
2	RB2-2614-000		1	SPRING, TORSION	
3	RB2-2615-000		1	SPRING, TORSION	
4	RB2-2662-000		1	COVER, RIGHT	
5	XA9-0924-000		10	SCREW, W/WASHER, M3X8	
6	RS1-1053-000		1	BUSHING	
7	RG5-4065-000		1	POWER SUPPLY CABLE	J2102, J3102
8	RB2-2660-000		1	COVER, LEFT UNDER	
9	RB2-2637-000		1	COVER	
10	RB2-2646-000		1	COVER, FRONT, LEFT	
11	RB2-2647-000		1	COVER, FRONT, RIGHT	
12	RB2-2624-000		1	GUIDE, LOWER	
13	RB2-2639-000		2	PLATE, REINFORCEMENT	
14	RF5-2581-000		1	PLATE, REINFORCEMENT, 3	
15	RF5-2582-000		1	PLATE, REINFORCEMENT, 6	
16	RF5-2583-000		1	PLATE, DRIVE	
17	RF5-2584-000		1	PLATE, PAPER FEED	
18	RH3-2202-000		1	POWER SUPPLY ASS'Y	
19	RH7-1371-000		1	MOTOR, STEPPING	M3101, J3104
20	RS6-0415-000		1	GEAR, 14T/27T	
21	RS6-0419-000		1	GEAR, 23T	
22	RS6-0420-000		1	GEAR, 31T	
23	RS6-0421-000		1	GEAR, 17T	
24	RS6-2005-000		1	SPRING, TENSION	
25	WT2-5061-000		1	SUPPORT, CABLE	
26	VS1-5057-002		1	CONNECTOR, 2P	J90
27	RB2-2661-000		1	COVER, RIGHT, UNDER	
28	XH9-0103-000		1	FOOT	
29	RG5-4043-000		1	ROLLER STAY ASS'Y	
29A	RB2-0469-000		2	ROLLER	
29B	RB2-2656-000		2	HOLDER	
29C	RS6-2001-000		2	SPRING, COMPRESSION	
29D	RB2-2599-000		2	HOLDER, ROLLER	
30	XA9-0824-000		1	SCREW, RS, M3X10	
31	XA9-0650-000		1	SCREW, M3X6	
32	RB2-2657-000		1	COVER, GEAR	
33	RB2-2658-000		1	COVER	
34	WT2-0499-000		1	CLIP, CABLE	
35	RG5-4045-000		1	DEFLECTOR ASS'Y	
35A	RB2-2648-000		1	MOUNT, HOLDER	
35B	RB2-2649-000		1	DEFLECTOR	
35C	RB2-2650-000		1	COVER, REAR, LOWER	
35D	RS6-2006-000		1	SPRING, TENSION	
36	RG5-4040-020		1	CONNECTOR STAY ASS'Y	
36A	RS5-9120-000		2	SCREW, STEPPED, M2.6	
36B	RB2-2620-000		1	PLATE	
36C	RB2-2623-000		1	GUIDE	
36D	RB2-2642-020		1	HOLDER, CONNECTOR	
36E	RB2-2643-000		1	SPACER	

www.drukparts.pl

COPYRIGHT © 2000 CANON INC.
CANON CLBP-400 REV.0 MAY 2000 PRINTED IN JAPAN [IMPRIME AU JAPON]

FIGURE & KEY NO.	PART NUMBER	RANK	Q'TY	DESCRIPTION	SERIAL NUMBER / REMARKS
S11 - 36F	RG5-4064-000		1	CONNECTOR CABLE	J53-J56, J81, J82, J3101, J3103
36G	VS1-6173-014		1	CONNECTOR, 14P	J57
36H	VS1-6174-014		1	CONNECTOR, 14P	J52
36J	WS6-5092-000		1	CONNECTOR, 14P	J91
36K	XA9-0924-000		5	SCREW, W/WASHER, M3X8	
36L	XA9-0836-000		1	SCREW, TP, M3X6	
37	RG5-4041-000		1	SOLENOID MOUNT ASS'Y	
37A	RB2-2629-000		1	LEVER, PRESSURE RELEASE	
37B	RF5-2587-000		1	MOUNT, SOLENOID	
37C	RH7-5207-000		1	SOLENOID	SL3101, J90
37D	XB1-2300-406		2	SCREW,MACH.,TRUSS HEAD,M3X4	
37E	XD3-1300-102		1	PIN, SPRING	
37F	WT2-5056-000		1	CLIP, CORD	
38	XA9-0836-000		36	SCREW, TP, M3X6	
39	WT2-0317-000		1	CLIP, CABLE	
40	WT2-0204-000		1	CLIP, CABLE	
41	WT2-5026-000		6	CLIP, CABLE	
42	WT2-0482-000		1	CLIP, WIRE	
501	XD2-1100-502		2	RING, E	
502	XB1-2300-605		2	SCREW,MACH.,TRUSS HEAD,M3X6	
503	XB4-7401-007		2	SCREW,TAPPING,PAN HEAD,M4X10	
504	XD2-1100-502		1	RING, E	
505	XB6-7300-409		11	SCREW, TP, M3X4	

www.drukparts.pl

FIGURE S40 DUPLEXING FEEDER ASS'Y (1/2)

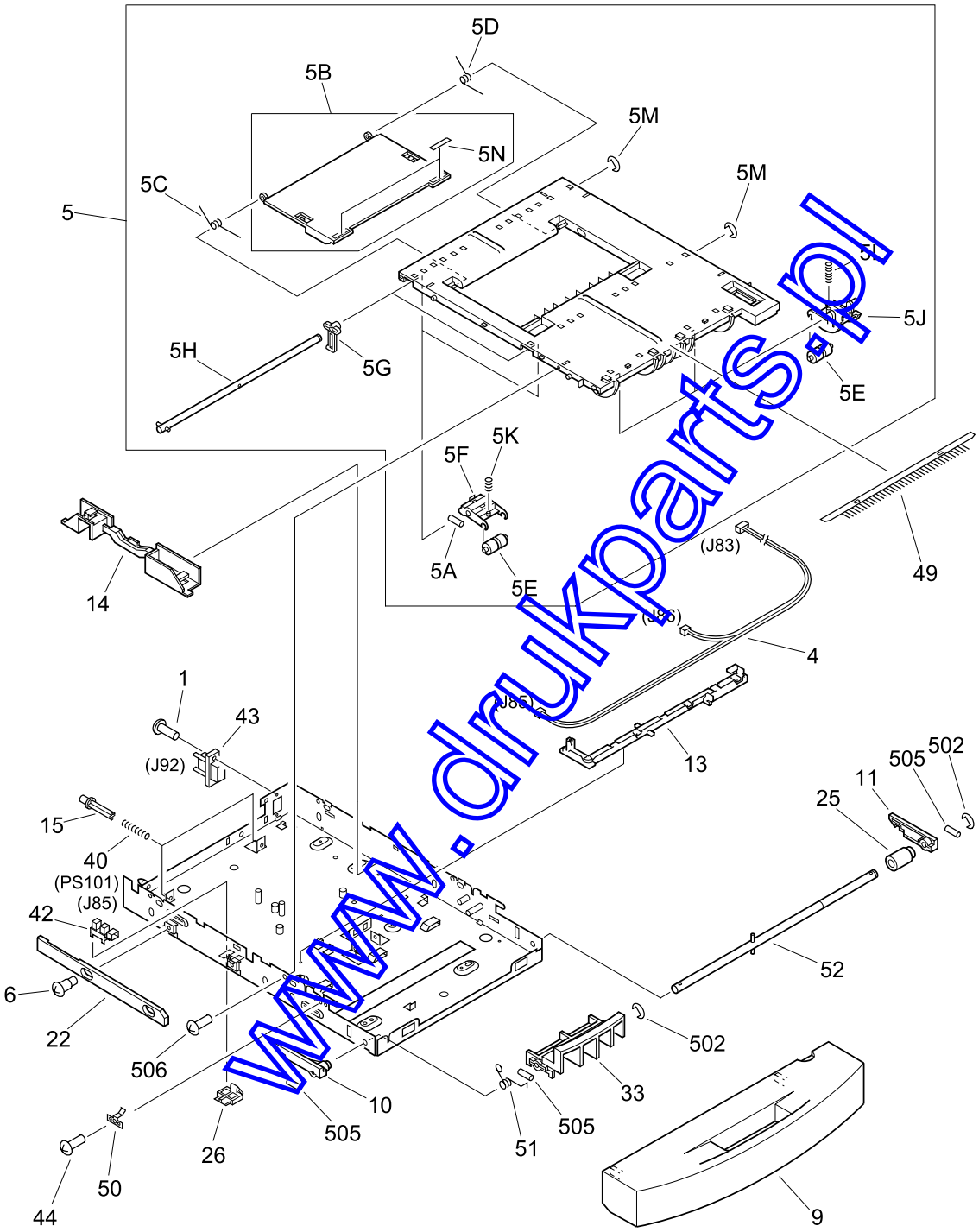

www.drukparts.pl

COPYRIGHT © 2000 CANON INC.
CANON CLBP-400 REV.0 MAY 2000 PRINTED IN JAPAN [IMPRIME AU JAPON]

FIGURE S40 DUPLEXING FEEDER ASS'Y (2/2)

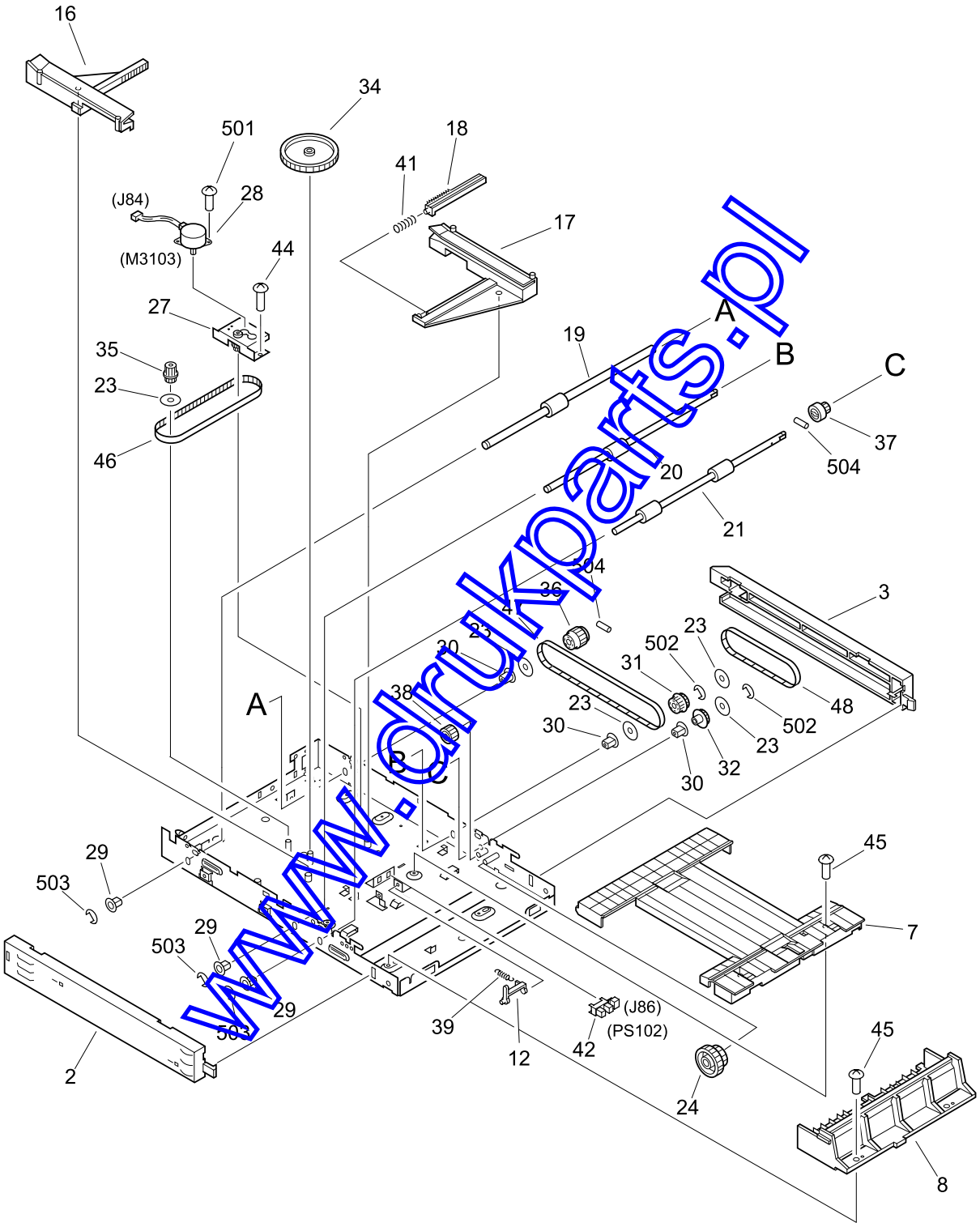

www.drukparts.pl

FIGURE & KEY NO.	PART NUMBER	RANK	Q'TY	DESCRIPTION	SERIAL NUMBER / REMARKS
S40 -	RG5-4058-000		1	DUPLEXING FEEDER ASS'Y	
1	XA9-0259-000		2	SCREW, MACH., TRUSS HEAD, M3X8	
2	RB2-2674-000		1	COVER, LEFT	
3	RB2-2675-000		1	COVER, RIGHT	
4	RG5-4068-000		1	PAPER FEED CABLE	J83, J85, J86
5	RG5-4052-000		1	FEEDER GUIDE ASS'Y	
5A	XD3-2160-182		2	PIN, DOWEL	
5B	RF5-2596-000		1	GUIDE	
5C	RB2-2671-000		1	SPRING, TORSION	
5D	RB2-2672-000		1	SPRING, TORSION	
5E	RB2-2693-000		4	ROLLER	
5F	RB2-2694-000		2	HOLDER, ROLLER	
5G	RB2-2695-000		2	CAM	
5H	RB2-2696-000		2	SHAFT	
5J	RB2-2698-000		2	HOLDER, ROLLER	
5K	RS6-2013-000		2	SPRING, COMPRESSION	
5L	RS6-2014-000		2	SPRING, COMPRESSION	
5M	XD2-1100-402		2	RING, E	
5N	RB2-2718-000		2	LABEL	
6	FS1-9102-000		2	SCREW, STEPPED, M3	
7	RB2-2667-000		1	GUIDE	
8	RB2-2668-000		1	GUIDE	
9	RB2-2703-000		1	COVER, FRONT	
10	RB2-2679-000		1	HOOK, LEFT	
11	RB2-2680-000		1	HOOK, RIGHT	
12	RB2-2682-000		1	FLAG, SENSOR	
13	RB2-2683-000		1	HOLDER, CABLE	
14	RB2-2684-000		1	HOLDER, CABLE	
15	RB2-2686-000		2	ROD	
16	RB2-2687-000		1	GUIDE, SIDE POSITIONING	
17	RB2-2688-000		1	GUIDE, SIDE POSITIONING	
18	RB2-2689-000		1	BLOCK, RACK	
19	RB2-2690-000		1	ROLLER, A	
20	RB2-2691-000		1	ROLLER, B	
21	RB2-2692-000		1	ROLLER, SK	
22	RB2-2697-000		1	LEVER	
23	RB2-2700-000		3	FLANGE	
24	RB2-2701-000		1	GEAR, 34T	
25	RB2-2702-000		1	SPACER	
26	RB2-2705-000		1	COVER, SENSOR	
27	RF5-2595-000		1	MOUNT, MOTOR	
28	RH7-1372-000		1	MOTOR, STEPPING	M3103, J84
29	RS1-1014-000		3	BUSHING	
30	RS1-1053-000		3	BUSHING	
31	RS5-3175-000		1	PULLEY	
32	RS5-3176-000		1	PULLEY	
33	RB2-2704-000		1	LEVER	
34	RS6-0430-000		1	GEAR, 17T/114T	
35	RS6-0431-000		1	GEAR, 16T/18T	
36	RS6-0432-000		1	GEAR, 18T/23T	

www.drukparts.pl

COPYRIGHT © 2000 CANON INC.
CANON CLBP-400 REV.0 MAY 2000 PRINTED IN JAPAN [IMPRIME AU JAPON]

FIGURE & KEY NO.	PART NUMBER	RANK	Q'TY	DESCRIPTION	SERIAL NUMBER / REMARKS
S40 - 37	RS6-0433-000		1	GEAR, 15T	
38	RS6-0434-000		1	GEAR, 22T	
39	RS6-2010-000		1	SPRING, TENSION	
40	RS6-2011-000		2	SPRING, COMPRESSION	
41	RS6-2012-000		1	SPRING, COMPRESSION	
42	WG8-5309-000		2	PHOTO-DETECTOR,EE-SX1235A-P2	PS101,PS102,J85,J86
43	WS6-5091-000		1	CONNECTOR, 14P, MALE	J92
44	XA9-0836-000		2	SCREW, TP, M3X6	
45	XA9-0924-000		4	SCREW, W/WASHER, M3X8	
46	XF9-0653-000		1	BELT, TIMING	
47	XF9-0654-000		1	BELT, TIMING	
48	XF9-0655-000		1	BELT, TIMING	
49	RB1-2309-000		1	ELIMINATOR, STATIC CHARGE	
50	RB2-2706-000		1	PLATE, GROUNDING	
51	RB2-2677-000		1	SPRING, TORSION	
52	RB2-2681-000		1	SHAFT	
501	XB1-2300-605		2	SCREW,MACH.,TRUSS HEAD,M3X6	
502	XD2-1100-402		4	RING, E	
503	XD2-1100-502		3	RING, E	
504	XD3-2160-122		2	PIN, DOWEL	
505	XD3-2160-142		3	PIN, DOWEL	
506	XB4-7401-007		5	SCREW,TAPPING,PAN HEAD,M4X10	

www.drukparts.pl

FIGURE S50 REVERSING ASS'Y

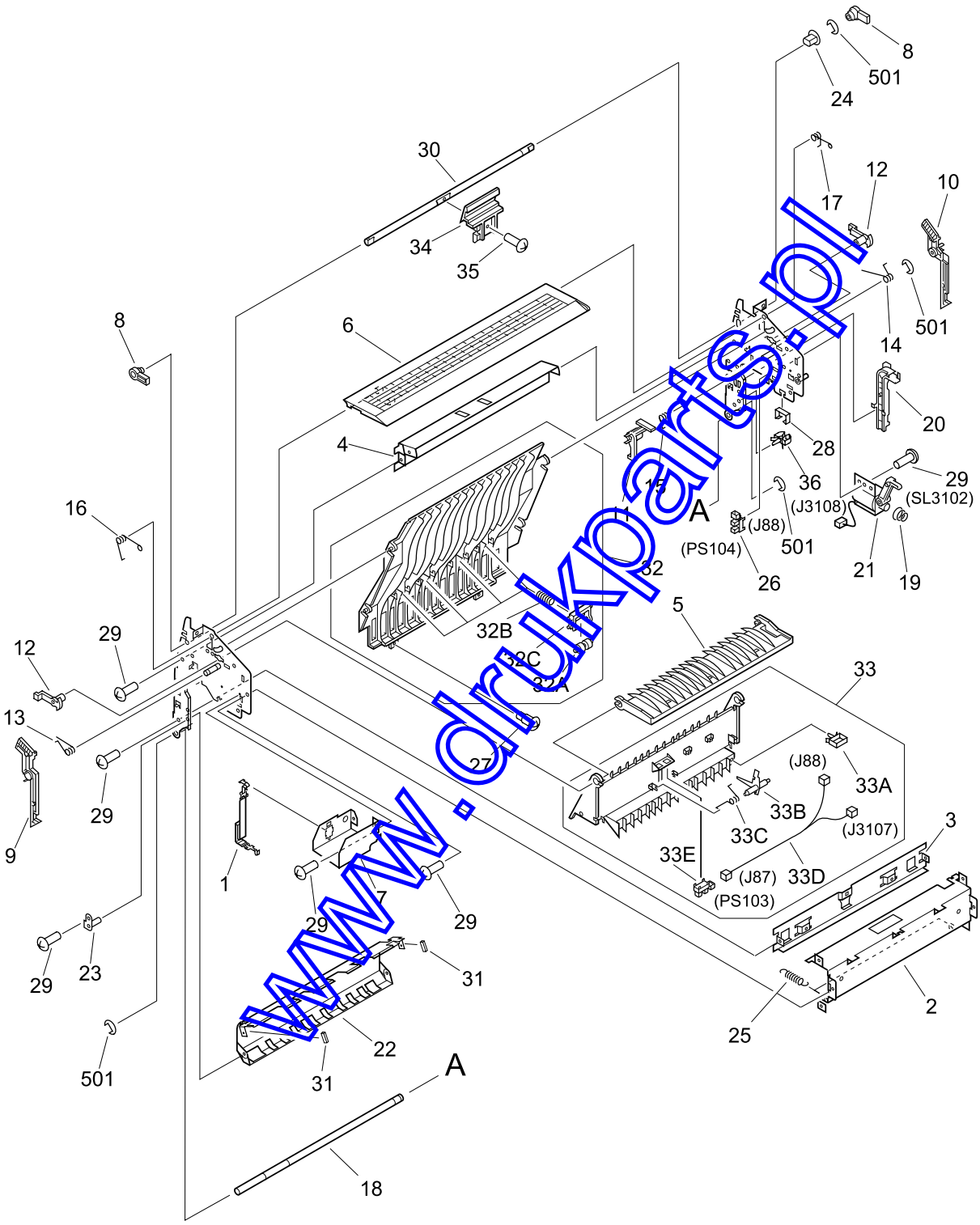

www.drukparts.pl

COPYRIGHT © 2000 CANON INC.
CANON CLBP-400 REV.0 MAY 2000 PRINTED IN JAPAN [IMPRIME AU JAPON]

FIGURE & KEY NO.	PART NUMBER	RANK	Q'TY	DESCRIPTION	SERIAL NUMBER / REMARKS
S50 -	RG5-4030-000		1	REVERSING ASS'Y	
1	RB2-2724-000		1	STRAP, COVER SUPPORT	
2	RB2-2583-000		1	PLATE	
3	RB2-2584-000		1	STAY	
4	RB2-2585-000		1	STAY, REAR	
5	RB2-2586-000		1	GUIDE, PAPER	
6	RB2-2721-000		1	COVER, GUIDE	
7	RB2-2728-000		1	PLATE, COVER	
8	RB2-2594-000		2	CAM	
9	RB2-2597-000		1	LATCH, LEFT	
10	RB2-2598-000		1	LATCH, RIGHT	
11	RB2-2601-000		1	FLAG, SENSOR	
12	RB2-2605-000		2	SUPPORT, GUIDE	
13	RB2-2608-000		1	SPRING, TORSION	
14	RB2-2609-000		1	SPRING, TORSION	
15	RB2-2610-000		1	SPRING, TORSION	
16	RB2-2612-000		1	SPRING, TORSION	
17	RB2-2613-000		1	SPRING, TORSION	
18	RB2-2717-000		1	SHAFT	
19	RB2-2729-000		1	SPRING, COMPRESSION	
20	RB2-2603-000		1	GUIDE, CABLE	
21	RF5-2576-000		1	SOLENOID	SL3102, J3108
22	RB2-2606-000		1	GUIDE, PAPER	
23	RF5-2578-000		1	SHAFT, GUIDE	
24	RS1-1053-000		1	BUSHING	
25	RS6-2002-000		2	SPRING, TENSION	
26	WG8-5309-000		1	PHOTO-DETECTOR,EE-SX1235A-P2	PS104, J88
27	RF5-0090-000		2	SCREW, STEPPED, M3	
28	WT2-5056-000		1	CLIP, CORD	
29	XA9-0836-000		16	SCREW, TP, M3X6	
30	RB2-2593-000		1	SHAFT	
31	RB2-2716-000		2	SPACER	
32	RG5-4024-000		1	GUIDE ASS'Y	
32A	RB2-0469-000		4	ROLLER	
32B	RS6-2001-000		4	SPRING, COMPRESSION	
32C	RB2-2599-000		4	HOLDER, ROLLER	
33	RG5-4022-000		1	REVERSING GUIDE ASS'Y	
33A	WT2-5026-000		1	CLIP, CABLE	
33B	RB2-2602-000		1	FLAG, SENSOR	
33C	RB2-2611-000		1	SPRING, TORSION	
33D	RG5-4066-000		1	CABLE	J87, J88, J3107
33E	WG8-5309-000		1	PHOTO-DETECTOR,EE-SX1235A-P2	PS103, J87
34	RB2-2720-000		1	LATCH	
35	XA9-0924-000		1	SCREW, W/WASHER, M3X8	
36	WT2-0387-000		1	CLAMP	
501	XD2-1100-502		4	RING, E	

www.drukparts.pl

FIGURE S55 LOWER REVERSING ASS'Y

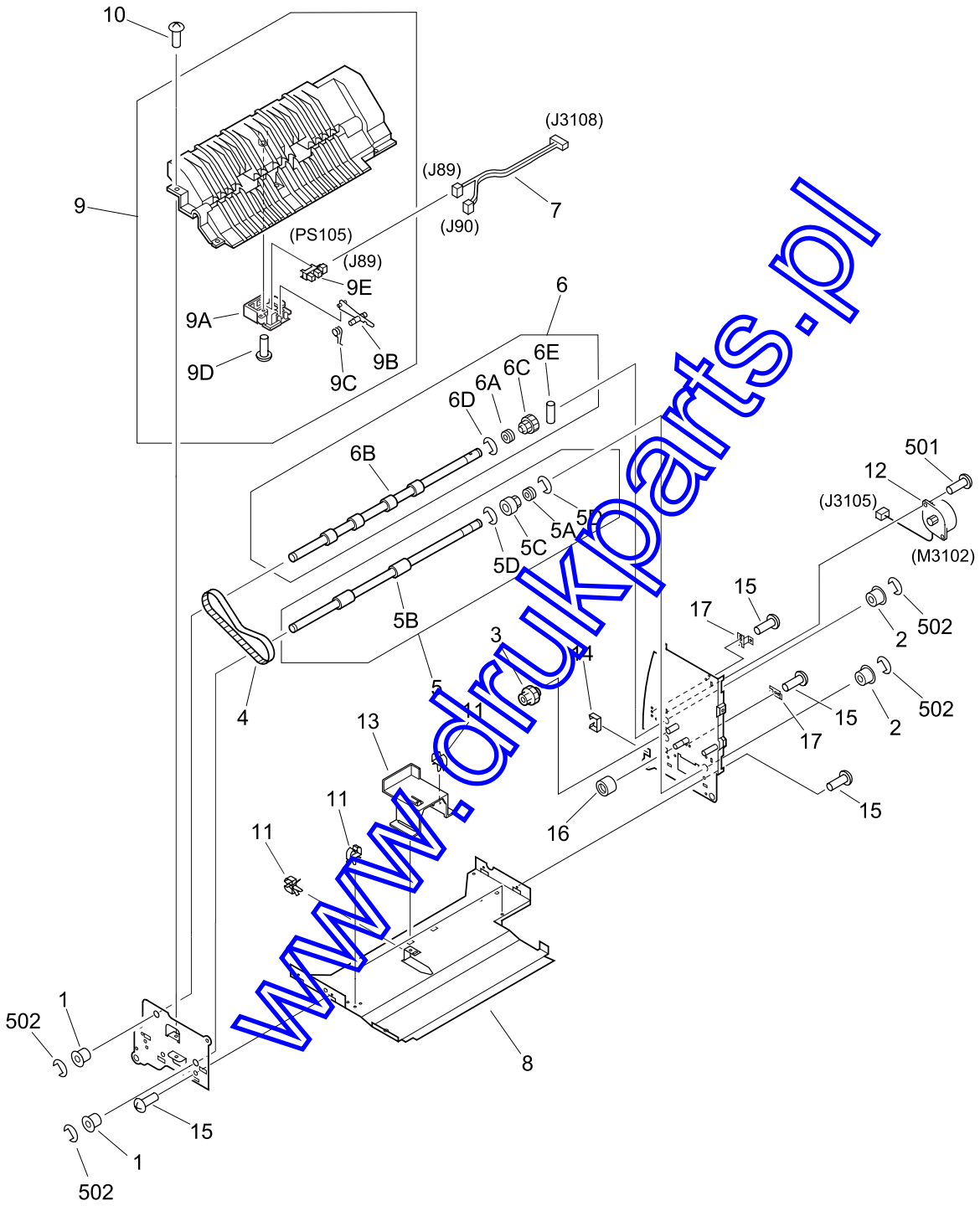

www.drukparts.pl

COPYRIGHT © 2000 CANON INC.
CANON CLBP-400 REV.0 MAY 2000 PRINTED IN JAPAN [IMPRIME AU JAPON]

FIGURE & KEY NO.	PART NUMBER	RANK	Q'TY	DESCRIPTION	SERIAL NUMBER / REMARKS
S55 -	RG5-4033-000		1	LOWER REVERSING ASS'Y	
1	RS1-1014-000		2	BUSHING	
2	RS1-1053-000		2	BUSHING	
3	RS6-0415-000		1	GEAR, 14T/27T	
4	XF9-0652-000		1	BELT, TIMING	
5	RG5-4036-000		1	ROLLER 2 ASS'Y	
5A	RB1-2303-000		1	FLANGE, PULLEY	
5B	RB2-2621-000		1	ROLLER, 2	
5C	RS5-3177-000		1	PULLEY	
5D	XD2-1100-402		2	RING, E	
6	RG5-4037-000		1	ROLLER 4 ASS'Y	
6A	RB1-2303-000		1	FLANGE, PULLEY	
6B	RB2-2622-000		1	ROLLER, 4	
6C	RS6-0416-000		1	GEAR, 14T/23T	
6D	XD2-1100-402		1	RING, E	
6E	XD3-2200-122		1	PIN, DOWEL	
7	RG5-4067-000		1	PAPER GUIDE CABLE	J89, J90, J3108
8	RB2-2619-000		1	CROSSMEMBER, GUIDE, LOWER	
9	RG5-4038-000		1	PAPER GUIDE ASS'Y	
9A	RB2-2631-000		1	HOLDER, SENSOR	
9B	RB2-2632-000		1	FLAG, SENSOR	
9C	RB2-2633-000		1	SPRING, TORSION	
9D	XB4-7400-609		1	SCREW,TAPPING,TRUSS HEAD, M4X6	
9E	WG8-5309-000		1	PHOTO-DETECTOR EE SX1235A-P2	PS105, J89
10	XA9-0924-000		4	SCREW, W/WASHER, M3X8	
11	WT2-5026-000		5	CLIP, CABLE	
12	RH7-1370-000		1	MOTOR, STEPPING	M3102, J3105
13	RB2-2659-000		1	GUIDE	
14	WT2-0204-000		1	CLIP, CABLE	
15	XA9-0836-000		6	SCREW,TP, M3X6	
16	RB2-2641-000		1	ROLLER	
17	RB2-2654-000		2	MOUNT, PCB	
501	XB1-2300-605		2	SCREW,MACH.,TRUSS HEAD,M3X6	
502	XD2-1100-502		4	RING, E	

www.drukparts.pl

FIGURE S90 PCB ASS'Y LOCATION DIAGRAM

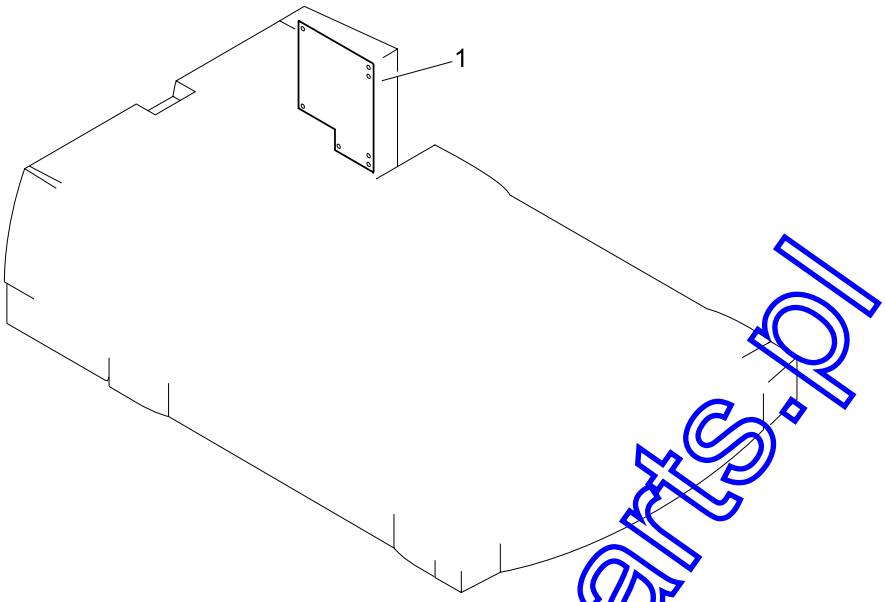

FIGURE & KEY NO.	PART NUMBER	RANK	Q'TY	DESCRIPTION	SERIAL NUMBER / REMARKS
S90 -	NPN		RF	PCB ASS'Y LOCATION DIAGRAM	
1	RG5-4063-000		1	DUPLEX DRIVER PCB ASS'Y	

www.drukparts.pl

COPYRIGHT © 2000 CANON INC.
CANON CLBP-400 REV.0 MAY 2000 PRINTED IN JAPAN [IMPRIME AU JAPON]

PAPER FEEDER

PAPER FEEDER
[R96-5005]

www.drukparts.pl

COPYRIGHT © 2000 CANON INC.
CANON CLBP-400 REV.0 MAY 2000 PRINTED IN JAPAN [IMPRIME AU JAPON]

www.drukparts.pl

FIGURE EA ASSEMBLY LOCATION DIAGRAM

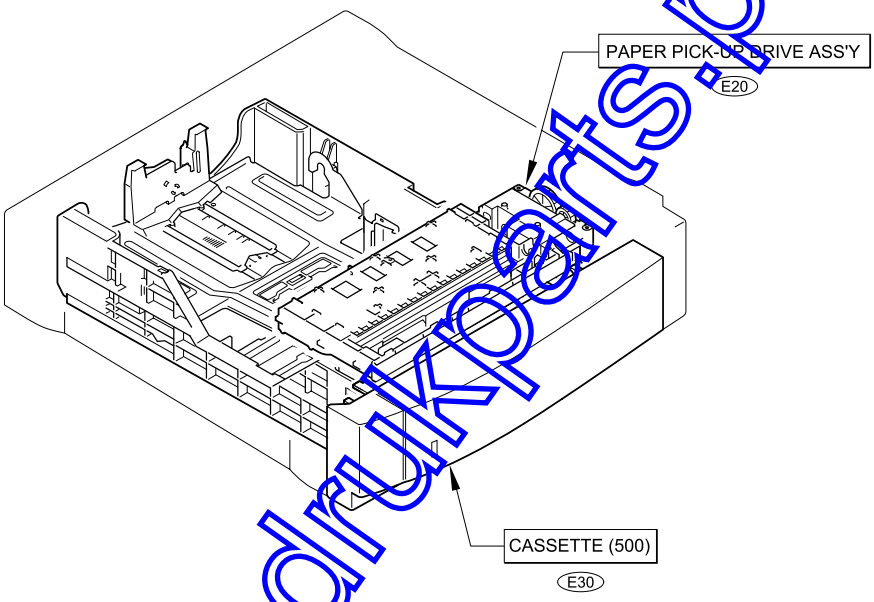

www.drukparts.pl

FIGURE E11 PAPER FEEDER MAIN BODY

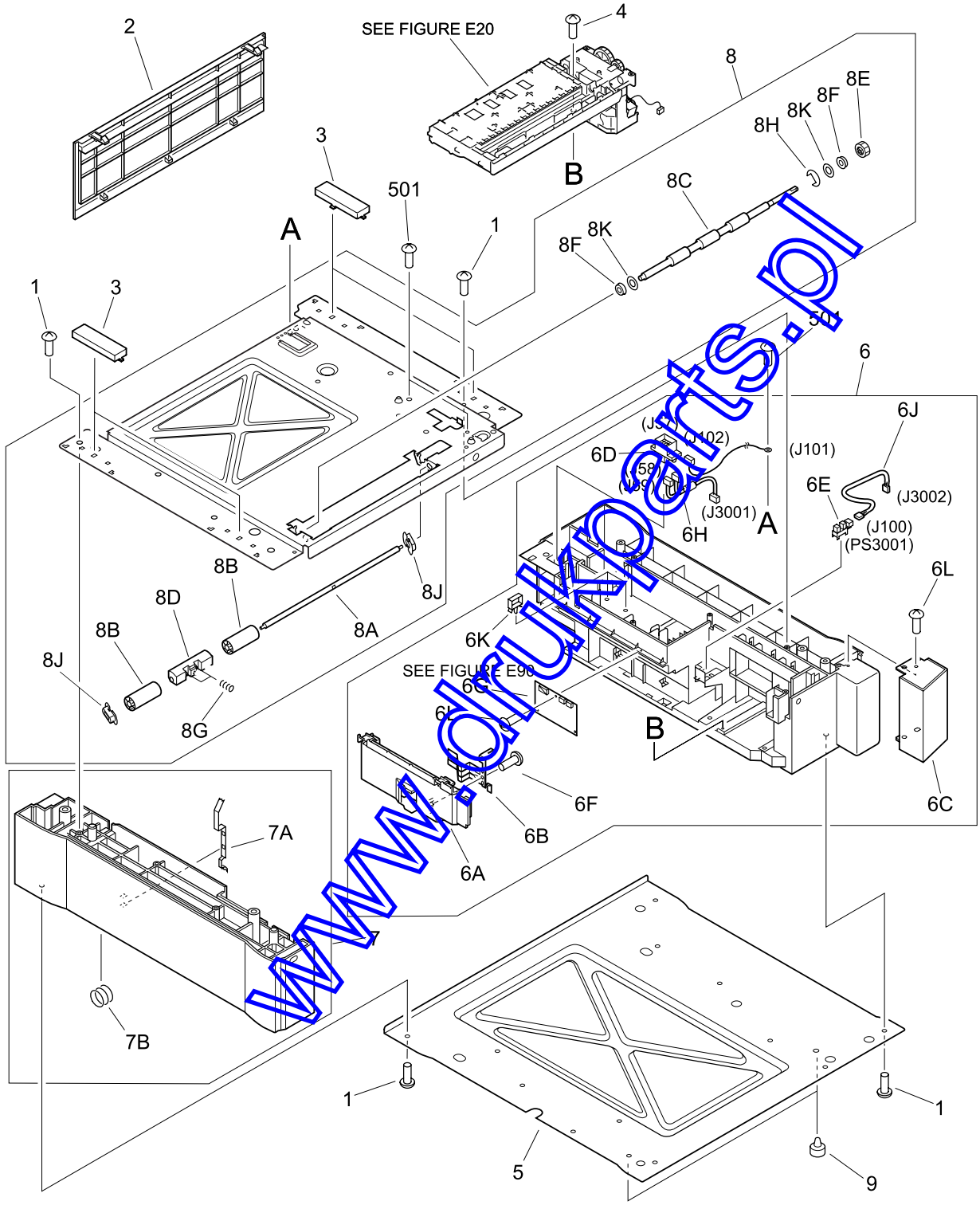

www.drukparts.pl

COPYRIGHT © 2000 CANON INC.
CANON CLBP-400 REV.0 MAY 2000 PRINTED IN JAPAN [IMPRIME AU JAPON]

FIGURE & KEY NO.	PART NUMBER	RANK	Q'TY	DESCRIPTION	SERIAL NUMBER / REMARKS
E11 -	NPN		RF	PAPER FEEDER MAIN BODY	
1	FA9-2753-000		19	SCREW, M4X10	
2	RB2-2575-000		1	COVER, REAR	
3	RB2-2574-000		4	COVER	
4	XA9-0917-000		1	SCREW, M3X16	
5	RF5-2569-000		1	FRAME LOWER	
6	RG5-3904-000		1	RIGHT COVER ASS'Y	
6A	RB1-8886-020		1	COVER, PCB	
6B	RB1-8887-000		1	SPRING, LEAF	
6C	RB2-2571-000		1	COVER	
6D	VS1-6174-014		1	CONNECTOR, 14P	J57-J59, J102
6E	WG8-5362-000		1	PHOTO-INTERRUPTER, TLP1241	PS3001, J100
6F	XA9-0915-000		1	SCREW, M3X6	
6G	RG5-4113-000		1	PAPER FEED DRIVER PCB ASS'Y	SEE FIGURE E90
6H	RG5-4114-000		1	PAPER FEED CABLE	J57-J59, J101, J102, J3001
6J	RG5-4115-000		1	SENSOR CABLE	J100, J3002
6K	WT2-0317-000		2	CLIP, CABLE	
6L	FA9-2753-000		2	SCREW, M4X10	
7	RG5-3906-000		1	LEFT COVER ASS'Y	
7A	RB1-8927-000		1	SPRING, LEAF	
7B	RS5-2652-000		1	SPRING, COMPRESSION	
8	RG5-3890-020		1	UPPER FRAME ASS'Y	
8A	RB1-8921-000		1	SHAFT	
8B	RB1-8922-000		2	ROLLER	
8C	RB1-8923-000		1	ROLLER, PAPER FEED	
8D	RB2-2556-000		1	HOLDER, SHAFT	
8E	RS5-0946-000		1	GEAR, 14T	
8F	XG9-0350-000		2	BALL BEARING, MF106ZZ D4M	
8G	RS5-2653-000		2	SPRING, COMPRESSION	
8H	XD2-1100-502		2	RING, E	
8J	RB1-8934-000		2	BUSHING	
8K	XD1-1106-239		2	SHIM	
9	XH9-0103-000		2	FOOT	
501	XB5-2300-609		2	SCREW, CT, M3X6	

www.dnukparts.pl

FIGURE E20 PAPER PICK-UP DRIVE ASS'Y

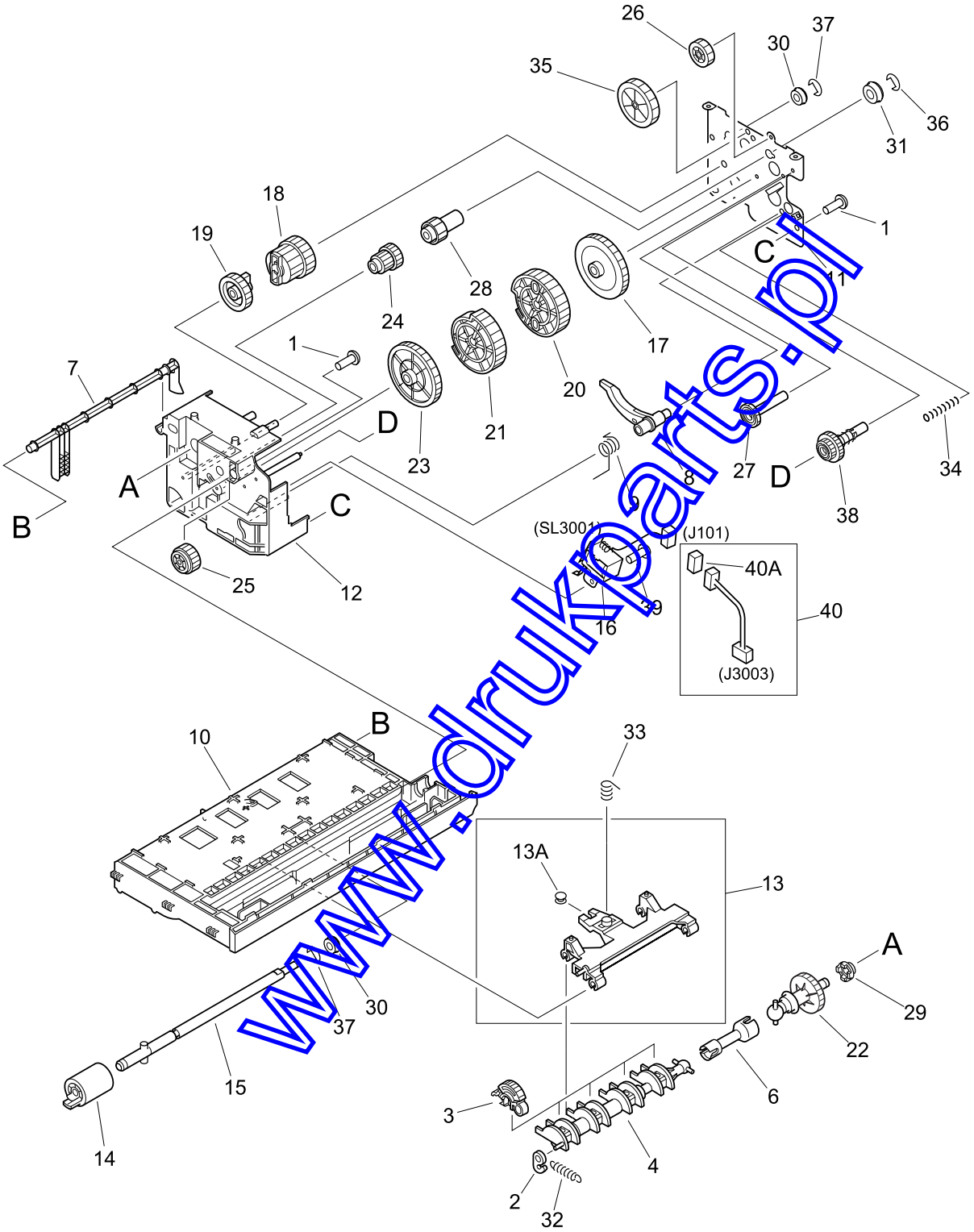

www.drukparts.pl

COPYRIGHT © 2000 CANON INC.
CANON CLBP-400 REV.0 MAY 2000 PRINTED IN JAPAN [IMPRIME AU JAPON]

FIGURE & KEY NO.	PART NUMBER	RANK	Q'TY	DESCRIPTION	SERIAL NUMBER / REMARKS
E20 -	RG5-3892-090		1	PAPER PICK-UP DRIVE ASS'Y	
1	FA9-2753-000		6	SCREW, M4X10	
2	RB1-2190-000		1	COLLAR, SPRING	
3	RB1-8865-000		4	ROLLER	
4	RB1-8867-000		1	SHAFT, ROLLER	
6	RB1-8877-000		1	JOINT	
7	RB1-8879-000		1	LEVER, SENSOR	
8	RB1-8880-000		1	LEVER	
9	RB1-8881-000		1	SPRING, TORSION	
10	RB1-8918-020		1	GUIDE	
11	RB1-8920-000		1	PLATE, DRIVE	
12	RB2-2549-030		1	BLOCK, DRIVE	
13	RF5-2483-000		1	ARM	
13A	RB1-8883-000		1	DAMPER	
14	RF5-2490-000		1	ROLLER	
15	RF5-2491-000		1	SHAFT, PAPER FEED	
16	RH7-5231-000		1	SOLENOID	SL3001, J101
17	RS5-0931-000		1	GEAR, 41T	
18	RS5-0932-000		1	GEAR, 23T/27T	
19	RS5-0933-000		1	GEAR, 27T	
20	RS5-0934-000		1	GEAR, 49T	
21	RS5-0935-000		1	GEAR, 31T/39T	
22	RG5-2675-000		1	TORQUE LIMITER ASS'Y	
23	RS5-0938-000		1	GEAR, 53T	
24	RS5-0939-000		1	GEAR, 14T/18T	
25	RS5-0940-000		1	GEAR, 20T	
26	RS5-0942-000		1	GEAR, 16T	
27	RS5-0944-000		1	GEAR, 19T	
28	RS5-0975-000		1	GEAR, 13T	
29	RB1-8955-000		1	SPACER	
30	RS5-1307-000		2	BUSHING	
31	RS5-1308-000		1	BUSHING	
32	RS5-2632-000		1	SPRING, TENSION	
33	RS5-2633-000		1	SPRING, COMPRESSION	
34	RS5-2634-000		1	SPRING, COMPRESSION	
35	RS6-0410-000		1	GEAR, 23T	
36	XD9-0134-000		1	RING, E	
37	XD9-0133-000		2	RING, E	
38	RF5-2512-000		1	GEAR, RATCHET	
39	XA9-0917-000		1	SCREW, M3X16	
40	RG5-4117-000		1	GROUNDING CABLE	J101, J3003
40A	VS1-0842-003		1	CONNECTOR, 3P	J101

www.drukparts.pl

FIGURE E30 CASSETTE (500)

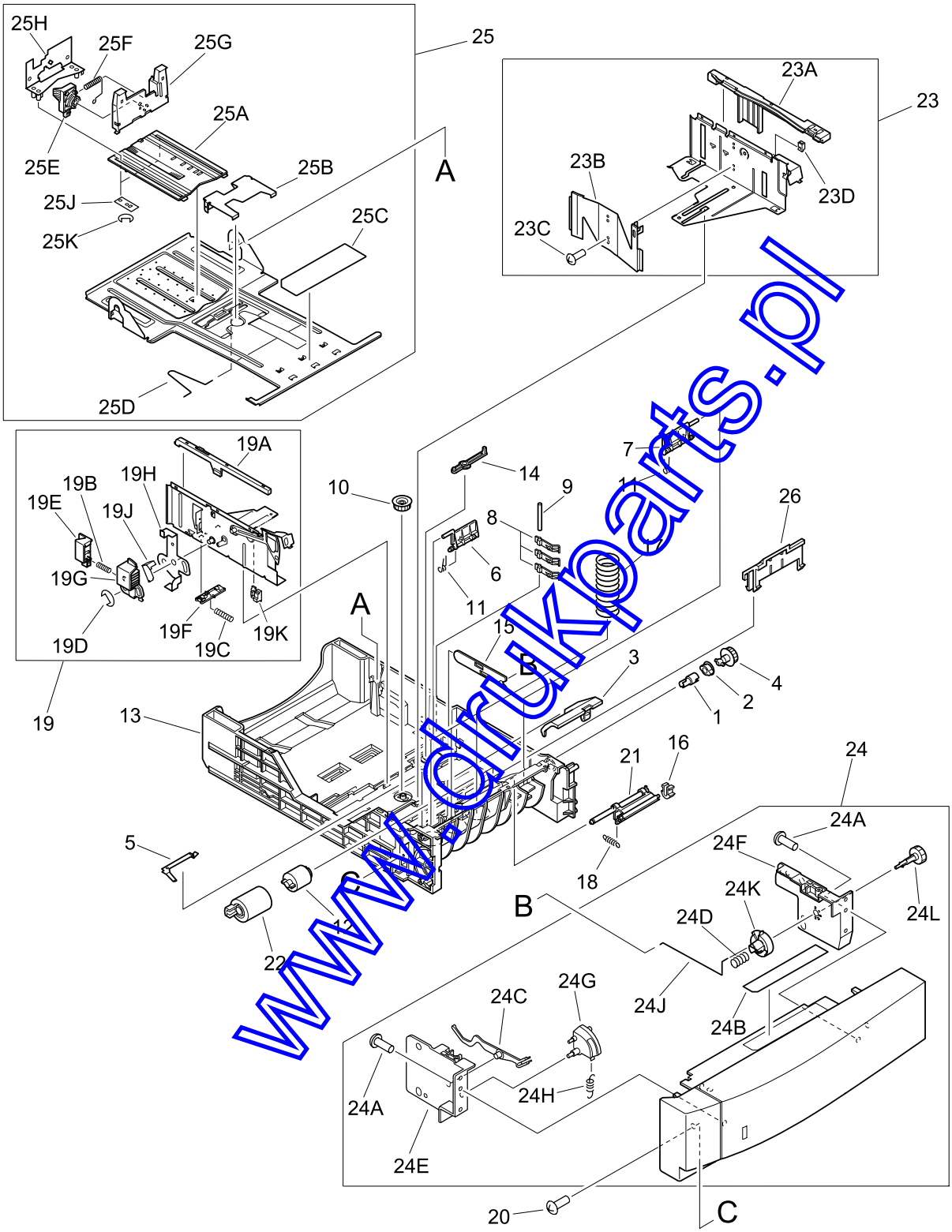

www.drukparts.pl

COPYRIGHT © 2000 CANON INC.
CANON CLBP-400 REV.0 MAY 2000 PRINTED IN JAPAN [IMPRIME AU JAPON]

FIGURE & KEY NO.	PART NUMBER	RANK	Q'TY	DESCRIPTION	SERIAL NUMBER / REMARKS
E30 -	RG5-3905-000		1	CASSETTE	500
1	RB1-8945-000		1	JOINT	
2	RB1-8946-000		1	BUSHING	
3	RB1-8947-000		1	COVER	
4	RB1-8948-000		1	GEAR, 22T	
5	RB1-8972-000		1	SPRING, LEAF	
6	RB1-8961-000		1	ARM, LIFTER, LEFT	
7	RB1-8962-000		1	ARM, LIFTER, RIGHT	
8	RB1-8963-000		3	ARM, SIZE	
9	RB1-8964-000		1	SHAFT, SIZE ARM	
10	RB1-8970-000		1	GEAR, 20T	
11	RB1-8973-000		2	SPRING, TORSION	
12	RB1-8974-000		1	LIMITER, TORQUE	
13	RB1-9368-020	N	1	BODY, CASSETTE	
14	RB1-9380-000		1	LEVER, SIZE CAM	
15	RB1-9381-020		1	PLATE	
16	RB1-8956-000		1	STOPPER, REAR	
17	RS5-2621-000		3	SPRING, COMPRESSION	
18	RS5-2622-020		1	SPRING, TENSION	
19	RG5-2694-000		1	LEFT SIDE LIMIT PLATE ASS'Y	
19A	RB1-9388-000		1	COVER, SIDE	
19B	RS5-2672-000		1	SPRING, COMPRESSION	
19C	RS5-2674-000		1	SPRING, COMPRESSION	
19D	XD9-0136-000		2	RING, E	
19E	RB1-9375-000		1	LEVER, SIDE	
19F	RB1-9387-000		1	CLICK, SIDE	
19G	RB1-9389-000		1	LEVER, SIDE STOPPER	
19H	RB1-8985-000		1	PLATE, STOP, SIDE	
19J	RB1-8981-000		1	SPRING, LEAF	
19K	RB1-8892-000		1	HOLDER, CLAW	
20	XA9-0606-000		2	SCREW, M4X10	
21	RF5-2489-000		1	HOLDER	
22	RF5-2490-000		1	ROLLER	
23	RG5-4288-000		1	RIGHT SIDE LIMIT PLATE ASS'Y	
23A	RB1-9395-000		1	COVER, SIDE	
23B	RB1-9379-000		1	SPRING, LEAF	
23C	XA9-0903-000		2	SCREW, M3X5	
23D	RB1-8893-000		1	HOLDER, CLAW	
24	RG5-3903-000		1	FRONT COVER ASS'Y	
24A	XA9-0606-000		4	SCREW, M4X10	
24B	RS5-8005-000		1	LABEL	
24C	RB2-2552-000		1	ARM, SENSOR	
24D	RS5-2982-000		1	SPRING, COMPRESSION	
24E	RB2-2576-000		1	SUPPORT, COVER, LEFT	
24F	RB2-2577-000		1	SUPPORT, COVER, RIGHT	
24G	RF5-2571-000		1	HOLDER, BLOCK	
24H	RS5-2994-000		1	SPRING, TENSION	
24J	RB1-9382-000		1	ROD, SIZE	
24K	RB1-9383-000		1	CLICK, SIZE	
24L	RB1-9384-000		1	DIAL, SIZE	

www.drukparts.pl

FIGURE & KEY NO.	PART NUMBER	RANK	Q'TY	DESCRIPTION	SERIAL NUMBER / REMARKS
E30 - 25	RG5-2693-030		1	PAPER LIFTING PLATE ASS'Y	
25A	RB1-9393-000		1	PLATE, GUIDE	
25B	RB1-9372-000		1	PLATE, LENGTH ADJUSTMENT (A5)	
25C	RB1-9394-020		1	SHEET, OPERATION	
25D	RB1-9392-000		1	ROD	
25E	RB1-9374-000		1	STOPPER	
25F	RS5-2981-000		1	SPRING, COMPRESSION	
25G	RB1-9371-000		1	PLATE, LENGTH ADJUSTMENT	
25H	RF5-2793-000		1	PLATE, SUPPORT, REAR	
25J	RB1-8983-000		2	PLATE, REAR	
25K	XD9-0134-000		4	RING, E	
26	RB1-8960-000		1	HOLDER, REAR	

www.drukparts.pl

COPYRIGHT © 2000 CANON INC.
CANON CLBP-400 REV.0 MAY 2000 PRINTED IN JAPAN [IMPRIME AU JAPON]

FIGURE E90 PCB ASS'Y LOCATION DIAGRAM

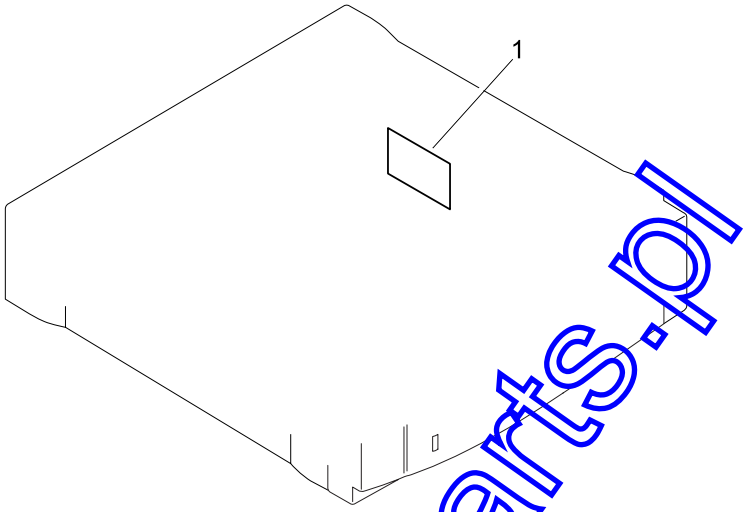

FIGURE & KEY NO.	PART NUMBER	RANK	Q'TY	DESCRIPTION	SERIAL NUMBER / REMARKS
E90 -	NPN		RF	PCB ASS'Y LOCATION DIAGRAM	
1	RG5-4113-000		1	PAPER FEED DRIVER PCB ASS'Y	

www.drukparts.pl

ETHERNET BOARD

www.dukparts.pl

ETHERNET BOARD
[R03-7900]

COPYRIGHT © 2000 CANON INC.
CANON CLBP-400 REV.0 MAY 2000 PRINTED IN JAPAN [IMPRIME AU JAPON]

www.drukparts.pl

FIGURE W10 ETHERNET BOARD NB-4F

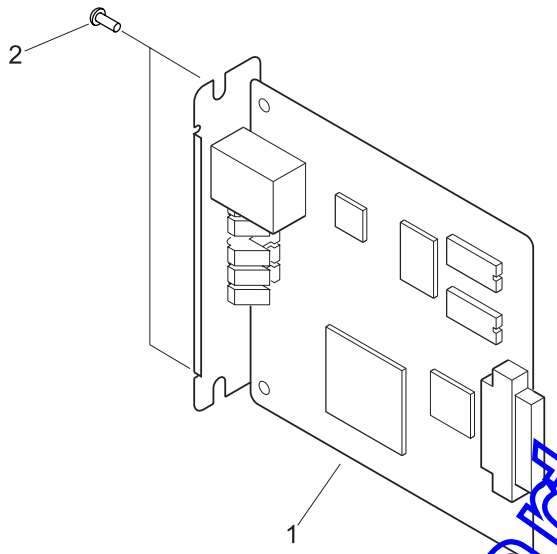

FIGURE & KEY NO.	PART NUMBER	RANK	Q'TY	DESCRIPTION	SERIAL NUMBER / REMARKS
W10 -	NPN		RF	ETHERNET BOARD NB-4F	
1	RH5-3027-000		1	BUILT-IN PRINT SERVER ASS'Y	
2	XA9-0326-000		2	SCREW, TP M3X4	

www.drukparts.pl

www.drukparts.pl

B NUMERICAL INDEX

PART NUMBER	FIGURE & KEY NO.
FA9-2753-000	E11 - 1
	E11 - 6L
	E20 - 1
FH7-7313-000	310 - 93
FS1-1433-000	310 - 2
FS1-9102-000	S40 - 6
RB1-2190-000	310 - 102
	E20 - 2
RB1-2303-000	S55 - 5A
	S55 - 6A
RB1-2309-000	S40 - 49
RB1-7183-000	315 - 1
RB1-8865-000	310 - 31B
	E20 - 3
RB1-8867-000	E20 - 4
RB1-8877-000	E20 - 6
RB1-8879-000	E20 - 7
RB1-8880-000	E20 - 8
RB1-8881-000	E20 - 9
RB1-8883-000	E20 - 13A
RB1-8886-020	E11 - 6A
RB1-8887-000	E11 - 6B
RB1-8892-000	E30 - 19K
RB1-8893-000	E30 - 23D
RB1-8912-000	310 - 31A
RB1-8918-020	E20 - 10
RB1-8920-000	E20 - 11
RB1-8921-000	E11 - 8A
RB1-8922-000	E11 - 8B
RB1-8923-000	E11 - 8C
RB1-8927-000	E11 - 7A
RB1-8934-000	E11 - 8J
RB1-8945-000	E30 - 1
RB1-8946-000	E30 - 2
RB1-8947-000	E30 - 3
RB1-8948-000	E30 - 4
RB1-8955-000	E20 - 29
RB1-8956-000	E30 - 16
RB1-8960-000	E30 - 26
RB1-8961-000	E30 - 6
RB1-8962-000	E30 - 7
RB1-8963-000	E30 - 8
RB1-8964-000	E30 - 9
RB1-8970-000	E30 - 10
RB1-8972-000	E30 - 5
RB1-8973-000	E30 - 11
RB1-8974-000	300 - 2
	E30 - 12
RB1-8981-000	E30 - 19J
RB1-8983-000	E30 - 25J
RB1-8985-000	E30 - 19H
RB1-9001-000	300 - 3
RB1-9368-020	E30 - 13
RB1-9371-000	E30 - 25G
RB1-9372-000	E30 - 25B
RB1-9374-000	E30 - 25E
RB1-9375-000	E30 - 19E
RB1-9379-000	E30 - 23B
RB1-9380-000	E30 - 14
RB1-9381-020	E30 - 1[illegible]
RB1-9382-000	E30 - 24J
RB1-9383-000	E30 - 24K
RB1-9384-000	E30 - 24L
RB1-9387-000	E30 - 19F
RB1-9388-000	E30 - 19[illegible]
RB1-9389-000	E30 - 19G
RB1-9392-000	E30 - 25D
RB1-9393-000	E30 - 25A
RB1-9394-020	E30 - 25C
RB1-9395-000	E30 - 23A
RB2-0421-000	810 - 54
RB2-0427-000	810 - 1
	810 - 55
RB2-0434-000	810 - 2
RB2-0444-020	810 - 12
RB2-0445-020	810 - 32
RB2-0450-020	810 - 8
RB2-0451-020	810 - 9
RB2-0452-000	810 - 46
RB2-0453-020	810 - 10
RB2-0454-000	810 - 47
RB2-0456-000	810 - 51
RB2-0458-000	810 - 11
	810 - 63
RB2-0459-000	810 - 14

PART NUMBER	FIGURE & KEY NO.
RB2-0469-000	S11 - 29A
	S50 - 32A
RB2-0488-000	810 - 15
RB2-0489-000	810 - 19
RB2-0494-000	810 - 49
RB2-0495-020	810 - 48
RB2-0496-000	310 - 25
RB2-0497-000	810 - 20
RB2-0501-000	810 - 18
RB2-0502-000	810 - 59
RB2-0511-000	105 - 35
RB2-0519-000	310 - 3
RB2-0537-000	310 - 4
RB2-0538-000	310 - 5
RB2-0539-000	310 - 6
RB2-0542-000	310 - 9
RB2-0543-000	310 - 10
RB2-0545-000	310 - 31C
RB2-0546-000	310 - 11
RB2-0551-000	310 - 12
RB2-0553-000	310 - 113
RB2-0559-000	310 - 124
RB2-0560-000	310 - 114
RB2-0561-000	310 - 15
RB2-0562-000	310 - 125
RB2-0563-000	310 - 16
RB2-0572-000	310 - 17
RB2-0575-000	310 - 18
RB2-0576-000	310 - 19
RB2-0592-000	310 - 128
RB2-0593-000	310 - 127
RB2-0594-000	310 - 126
RB2-0595-000	310 - 129
RB2-0598-000	310 - 97
RB2-0599-020	310 - 96
RB2-0601-000	310 - 21
RB2-0602-000	310 - 103
RB2-0603-000	310 - 104
RB2-0604-000	310 - 115
RB2-0614-000	310 - 133
RB2-0617-000	310 - 22
RB2-0621-000	310 - 130
RB2-0633-000	310 - 119
RB2-0634-000	310 - 32
RB2-0635-000	310 - 118
RB2-0716-000	160 - 10
RB2-0717-000	315 - 15A
RB2-0720-000	315 - 8
RB2-0721-000	315 - 9
RB2-0723-000	315 - 14
RB2-0724-000	315 - 21
RB2-0744-000	315 - 15B
RB2-0830-000	310 - 23
RB2-0831-000	310 - 24
RB2-0863-000	100 - 9
RB2-0916-000	150 - 1
RB2-0965-000	105 - 27
RB2-0966-000	105 - 24
RB2-0977-000	105 - 23
RB2-0981-000	105 - 17
RB2-0982-000	105 - 29
RB2-0983-000	255 - 8
RB2-0985-000	105 - 22
RB2-0999-020	105 - 25
RB2-1008-000	102 - 1
RB2-1113-000	150 - 2
RB2-1114-000	150 - 3
RB2-1155-000	104 - 3
RB2-1156-000	104 - 4
RB2-1169-000	103 - 9
RB2-1170-040	104 - 2
RB2-1172-000	104 - 7
RB2-1175-000	102 - 2
RB2-1179-000	104 - 8
RB2-1180-000	104 - 14
RB2-1253-030	105 - 33
RB2-1257-000	105 - 12
RB2-1277-020	103 - 7
RB2-1278-000	103 - 12
RB2-1279-000	105 - 14
RB2-1280-000	105 - 30
RB2-1281-000	102 - 3
RB2-1282-030	105 - 6
RB2-1283-000	102 - 7
RB2-1284-000	105 - 36

PART NUMBER	FIGURE & KEY NO.
RB2-1286-000	103 - 10
RB2-1297-000	100 - 12B
RB2-1303-000	310 - 35
RB2-1304-000	310 - 98
RB2-1358-000	160 - 14
RB2-1359-020	160 - 1
RB2-1360-020	160 - 2
RB2-1362-000	160 - 4
RB2-1371-000	160 - 46
RB2-1372-000	160 - 44
RB2-1379-000	160 - 48
RB2-1391-000	160 - 25
RB2-1392-000	160 - 26
RB2-1393-020	160 - 52
RB2-1396-000	160 - 23
RB2-1397-020	160 - 22
RB2-1409-000	160 - 5
RB2-1410-000	160 - 49
RB2-1413-020	160 - 53
RB2-1418-000	160 - 47
RB2-1419-000	310 - 1
RB2-1421-000	160 - 45
RB2-1422-000	310 - 106
RB2-1424-000	160 - 42
RB2-1456-000	104 - 9
RB2-1471-000	310 - 92
RB2-1482-000	100 - 13A
RB2-1486-000	160 - 3
RB2-1503-000	100 - 6
RB2-1504-020	100 - 4
RB2-1505-000	100 - 5
RB2-1506-000	100 - 3
RB2-1507-000	100 - 13B
RB2-1522-000	100 - 15
RB2-1535-000	103 - 6
RB2-1556-000	102 - 8A
RB2-1572-000	310 - 40
RB2-1591-000	104 - 1
RB2-1598-000	150 - 15
RB2-2549-030	E20 - 12
RB2-2552-000	E30 - 24C
RB2-2556-000	E11 - 8D
RB2-2571-000	E11 - 6C
RB2-2574-000	E11 - 3
RB2-2575-000	E11 - 2
RB2-2576-000	E30 - 24E
RB2-2577-000	E30 - 24F
RB2-2583-000	S50 - 2
RB2-2584-000	S50 - 3
RB2-2585-000	S50 - 4
RB2-2586-000	S50 - 5
RB2-2593-000	S50 - 30
RB2-2594-000	S50 - 8
RB2-2597-000	S50 - 9
RB2-2598-000	S50 - 10
RB2-2599-000	S11 - 29D
	S50 - 32C
RB2-2601-000	S50 - 11
RB2-2602-000	S50 - 33B
RB2-2603-000	S50 - 20
RB2-2605-000	S50 - 12
RB2-2606-000	S50 - 22
RB2-2608-000	S50 - 13
RB2-2609-000	S50 - 14
RB2-2610-000	S50 - 15
RB2-2611-000	S50 - 33C
RB2-2612-000	S50 - 16
RB2-2613-000	S50 - 17
RB2-2614-000	S11 - 2
RB2-2615-000	S11 - 3
RB2-2619-000	S55 - 8
RB2-2620-000	S11 - 36B
RB2-2621-000	S55 - 5B
RB2-2622-000	S55 - 6B
RB2-2623-000	S11 - 36C
RB2-2624-000	S11 - 12
RB2-2629-000	S11 - 37A
RB2-2631-000	S55 - 9A
RB2-2632-000	S55 - 9B
RB2-2633-000	S55 - 9C
RB2-2637-000	S11 - 9
RB2-2639-000	S11 - 13
RB2-2641-000	S55 - 16
RB2-2642-020	S11 - 36D
RB2-2643-000	S11 - 36E

www.drukparts.pl

PART NUMBER	FIGURE & KEY NO.
RB2-2646-000	S11 - 10
RB2-2647-000	S11 - 11
RB2-2648-000	S11 - 35A
RB2-2649-000	S11 - 35B
RB2-2650-000	S11 - 35C
RB2-2654-000	S55 - 17
RB2-2656-000	S11 - 29B
RB2-2657-000	S11 - 32
RB2-2658-000	S11 - 33
RB2-2659-000	S55 - 13
RB2-2660-000	S11 - 8
RB2-2661-000	S11 - 27
RB2-2662-000	S11 - 4
RB2-2667-000	S40 - 7
RB2-2668-000	S40 - 8
RB2-2671-000	S40 - 5C
RB2-2672-000	S40 - 5D
RB2-2674-000	S40 - 2
RB2-2675-000	S40 - 3
RB2-2677-000	S40 - 51
RB2-2679-000	S40 - 10
RB2-2680-000	S40 - 11
RB2-2681-000	S40 - 52
RB2-2682-000	S40 - 12
RB2-2683-000	S40 - 13
RB2-2684-000	S40 - 14
RB2-2686-000	S40 - 15
RB2-2687-000	S40 - 16
RB2-2688-000	S40 - 17
RB2-2689-000	S40 - 18
RB2-2690-000	S40 - 19
RB2-2691-000	S40 - 20
RB2-2692-000	S40 - 21
RB2-2693-000	S40 - 5E
RB2-2694-000	S40 - 5F
RB2-2695-000	S40 - 5G
RB2-2696-000	S40 - 5H
RB2-2697-000	S40 - 22
RB2-2698-000	S40 - 5J
RB2-2700-000	S40 - 23
RB2-2701-000	S40 - 24
RB2-2702-000	S40 - 25
RB2-2703-000	S40 - 9
RB2-2704-000	S40 - 33
RB2-2705-000	S40 - 26
RB2-2706-000	S40 - 50
RB2-2716-000	S50 - 31
RB2-2717-000	S50 - 18
RB2-2718-000	S40 - 5N
RB2-2719-000	S11 - 1
RB2-2720-000	S50 - 34
RB2-2721-000	S50 - 6
RB2-2724-000	S50 - 1
RB2-2728-000	S50 - 7
RB2-2729-000	S50 - 19
RB2-5114-000	160 - 9
RB2-5117-000	160 - 21
RB2-5120-000	160 - 11
RB2-5125-000	315 - 4
RB2-5126-000	315 - 10
RB2-5130-000	105 - 10
RB2-5138-000	150 - 11
RB2-5162-000	810 - 22
RB2-5168-000	310 - 11[illegible]
RB2-5170-000	310 - 99
RB2-5173-000	105 - [illegible]
RB2-5174-000	100 - 12A
RB2-5185-000	104 - 5
RB2-5196-000	104 - 6
RB2-5199-000	150 - 17
RB2-5209-000	150 - 4
RB2-5212-000	104 - 13
RB2-5213-000	104 - 21
RB2-5219-000	105 - 1
RB2-5221-000	315 - 11
RF5-0090-000	105 - 34
	S50 - 27
RF5-0716-000	810 - 41
	810 - 53
RF5-1885-000	300 - 4
RF5-2092-020	310 - 26
RF5-2094-020	310 - 28
RF5-2095-020	310 - 29
RF5-2100-000	810 - 52
RF5-2103-000	810 - 16

PART NUMBER	FIGURE & KEY NO.
RF5-2112-000	103 - 2
RF5-2122-030	580 - 1
RF5-2124-000	101 - 1
RF5-2126-000	300 - 1
RF5-2144-000	104 - 26
RF5-2156-000	255 - 2
RF5-2161-000	310 - 20
RF5-2483-000	E20 - 13
RF5-2489-000	E30 - 21
RF5-2490-000	E20 - 14
	E30 - 22
RF5-2491-000	E20 - 15
RF5-2512-000	E20 - 38
RF5-2569-000	E11 - 5
RF5-2571-000	E30 - 24G
RF5-2576-000	S50 - 21
RF5-2578-000	S50 - 23
RF5-2581-000	S11 - 14
RF5-2582-000	S11 - 15
RF5-2583-000	S11 - 16
RF5-2584-000	S11 - 17
RF5-2587-000	S11 - 37B
RF5-2595-000	S40 - 27
RF5-2596-000	S40 - 5B
RF5-2793-000	E30 - 25H
RF5-3124-000	310 - 117
RF5-3126-000	160 - 19
RF5-3127-000	160 - 18
RF5-3132-000	105 - 2
RF5-3148-000	105 - 13
RF5-3149-000	315 - 12
RF5-3150-000	315 - 13
RF5-3158-000	160 - 37
RF5-3168-000	810 - 3
RF5-3169-000	120 - 1
RG1-3890-000	100 - 2
RG1-3893-000	120 - [illegible]
	900 - 6
RG1-3916-000	310 - 111
RG1-4029-000	[illegible] - 4
	900 - 5
RG5-2675-000	E20 - 22
RG5-2693-030	E30 - 23
RG5-2694-000	E30 - 19
RG5-3192-000	160 - 16
RG5-3193-000	160 - 17
RG5-3205-050	310 - 30
RG5-3216-000	315 - 16
RG5-3221-000	315 - 2
RG5-3225-040	310 - 31
RG5-3227-000	310 - 77
RG5-3228-000	310 - 54
RG5-3234-000	310 - 33
RG5-3241-020	310 - 39
RG5-3242-040	310 - 136
RG5-3280-000	103 - 1
RG5-3292-000	104 - 16
RG5-3293-000	103 - 3
RG5-3296-040	104 - 18
RG5-3302-020	101 -
RG5-3312-000	100 - 10
RG5-3327-040	100 - 8
RG5-3355-000	105 - 21
RG5-3782-000	104 - 11
RG5-3785-000	310 - 42
RG5-3786-000	310 - 43
RG5-3787-000	310 - 44
RG5-3791-000	160 - 54
RG5-3801-000	810 - 23
RG5-3810-000	900 - 2
RG5-3817-000	103 - 1A
	900 - 4
RG5-3880-000	810 - 25
RG5-3881-000	310 - 46
RG5-3884-000	310 - 27
RG5-3886-000	105 - 19
RG5-3890-020	E11 - 8
RG5-3892-090	E20 -
RG5-3903-000	E30 - 24
RG5-3904-000	E11 - 6
RG5-3905-000	E30 -
RG5-3906-000	E11 - 7
RG5-4022-000	S50 - 33
RG5-4024-000	S50 - 32
RG5-4030-000	S50 -

PART NUMBER	FIGURE & KEY NO.
RG5-4033-000	S55 -
RG5-4036-000	S55 - 5
RG5-4037-000	S55 - 6
RG5-4038-000	S55 - 9
RG5-4040-020	S11 - 36
RG5-4041-000	S11 - 37
RG5-4043-000	S11 - 29
RG5-4045-000	S11 - 35
RG5-4052-000	S40 - 5
RG5-4058-000	S40 -
RG5-4063-000	S90 - 1
RG5-4064-000	S11 - 36F
RG5-4065-000	S11 - 7
RG5-4066-000	S50 - 33D
RG5-4067-000	S55 - 7
RG5-4068-000	S40 - 4
RG5-4113-000	E11 - 6G
	E90 - 1
RG5-4114-000	E11 - 6H
RG5-4115-000	E11 - 6J
RG5-4117-000	E20 - 40
RG5-4288-000	E30 - 23
RG5-4651-000	310 - 108
RG5-4696-020	310 - 132
RG5-5115-000	580 -
RG5-5116-000	310 - 37
RG5-5117-000	310 - 112
RG5-5118-000	310 - 38
RG5-5119-000	310 - 41
RG5-5122-000	160 - 12
RG5-5124-000	160 - 43
RG5-5125-000	315 - 3
RG5-5128-000	315 - 15
RG5-5129-000	315 - 17
RG5-5142-050	150 -
RG5-5144-000	150 - 12
RG5-5145-000	150 - 16
RG5-5146-000	150 - 13
RG5-5147-000	150 - 5
RG5-5148-000	150 - 7
RG5-5149-000	150 - 9
RG5-5155-050	810 -
RG5-5162-000	104 - 19
RG5-5163-000	104 - 27
RG5-5165-000	102 - 8
RG5-5169-000	105 - 5
RG5-5170-000	104 - 12
RG5-5173-060	102 - 5
RG5-5175-000	104 - 17
RG5-5179-000	900 - 1
RG5-5180-000	900 - 3
RG5-5186-000	103 - 4
RG5-5187-000	105 - 32
RG5-5190-000	315 - 19
RG5-5196-000	104 - 15
RG5-5201-000	255 - 1
RG5-5206-000	251 -
RG5-5208-000	251 - 1
RG5-5209-040	255 -
RG5-5210-000	100 - 11
RG5-5225-000	315 - 18
RG5-5226-000	160 - 13
	315 -
RG5-5229-000	160 -
RG5-5233-000	100 - 12
RG5-5234-020	150 - 8
RG5-5235-000	350 -
RG5-5242-000	120 -
RG5-5243-000	100 - 1
RG5-5246-000	100 - 13
RG5-5251-000	350 - 2
RH2-5116-000	102 - 13
RH2-5230-000	102 - 10
RH2-5335-000	103 - 1B
RH2-5400-000	104 - 23
RH3-2202-000	S11 - 18
RH3-2220-000	102 - 12
RH5-3027-000	W10 - 1
RH7-1343-000	310 - 47
RH7-1370-000	S55 - 12
RH7-1371-000	S11 - 19
RH7-1372-000	S40 - 28
RH7-1407-000	102 - 4
RH7-1435-000	105 - 26
RH7-1436-000	100 - 12C

www.drukparts.pl

COPYRIGHT © 2000 CANON INC.
CANON CLBP-400 REV.0 MAY 2000 PRINTED IN JAPAN [IMPRIME AU JAPON]

PART NUMBER	FIGURE & KEY NO.
RH7-4112-000	810 - 26
RH7-4114-000	810 - 27
RH7-5176-000	310 - 49
RH7-5178-060	310 - 50
RH7-5180-060	310 - 51
RH7-5185-000	315 - 20
RH7-5207-000	S11 - 37C
RH7-5231-000	E20 - 16
RH7-5260-000	160 - 27
RH7-7090-000	810 - 44
	810 - 58
RH7-7092-000	810 - 17
RS1-1014-000	S40 - 29
	S55 - 1
RS1-1053-000	S11 - 6
	S40 - 30
	S50 - 24
	S55 - 2
RS1-9004-000	810 - 30
RS5-0412-000	160 - 38
RS5-0931-000	E20 - 17
RS5-0932-000	E20 - 18
RS5-0933-000	E20 - 19
RS5-0934-000	E20 - 20
RS5-0935-000	E20 - 21
RS5-0938-000	E20 - 23
RS5-0939-000	E20 - 24
RS5-0940-000	310 - 121
	E20 - 25
RS5-0942-000	E20 - 26
RS5-0944-000	E20 - 27
RS5-0946-000	E11 - 8E
RS5-0975-000	E20 - 28
RS5-1293-000	310 - 55
RS5-1307-000	E20 - 30
RS5-1308-000	E20 - 31
RS5-1331-000	810 - 62
RS5-1333-000	160 - 39
RS5-1335-000	160 - 35
RS5-1339-000	310 - 57
RS5-1340-000	310 - 53
RS5-1341-000	310 - 135
RS5-1343-000	810 - 28
RS5-1344-000	310 - 7
RS5-1497-000	310 - 56
RS5-2621-000	E30 - 17
RS5-2622-020	E30 - 18
RS5-2632-000	E20 - 32
RS5-2633-000	E20 - 33
RS5-2634-000	E20 - 34
RS5-2652-000	E11 - 7B
RS5-2653-000	E11 - 8G
RS5-2672-000	E30 - 19B
RS5-2674-000	E30 - 19C
RS5-2733-000	310 - 58
RS5-2750-000	315 - 22
RS5-2751-000	315 - 7
RS5-2752-000	315 - 5
RS5-2754-000	105 - 7
RS5-2756-000	160 - 6
RS5-2760-000	160 - 24
RS5-2768-000	310 - 59
RS5-2779-000	310 - 131
RS5-2794-000	310 - 125
RS5-2799-000	310 - 126
RS5-2800-000	310 - 101
RS5-2981-000	E30 - 25F
RS5-2982-000	E30 - 24D
RS5-2994-000	E30 - 24H
RS5-3175-000	S40 - 31
RS5-3176-000	S40 - 32
RS5-3177-000	S55 - 5C
RS5-8005-000	E30 - 24B
RS5-8880-000	105 - 3
RS5-8881-000	105 - 3
RS5-8882-000	105 - 3
RS5-8883-000	105 - 3
RS5-9120-000	S11 - 36A
RS6-0132-000	310 - 60
RS6-0133-000	310 - 61
RS6-0134-000	310 - 62
RS6-0135-000	310 - 63
RS6-0136-000	310 - 64
RS6-0137-000	310 - 65
RS6-0138-000	310 - 66

PART NUMBER	FIGURE & KEY NO.
RS6-0139-000	310 - 67
RS6-0140-000	310 - 68
RS6-0141-000	310 - 69
RS6-0143-000	310 - 71
RS6-0144-000	310 - 72
RS6-0145-000	310 - 73
RS6-0146-000	310 - 74
RS6-0147-000	310 - 75
RS6-0149-000	310 - 14
RS6-0150-020	310 - 78
RS6-0151-000	310 - 79
RS6-0152-000	310 - 80
RS6-0153-000	310 - 81
RS6-0154-000	310 - 82
RS6-0155-000	310 - 83
RS6-0156-000	310 - 122
RS6-0157-000	310 - 123
RS6-0158-000	310 - 116
RS6-0159-000	310 - 76
RS6-0163-000	310 - 84
RS6-0186-020	255 - 3
RS6-0195-000	810 - 33
RS6-0196-000	810 - 13
RS6-0197-000	810 - 34
RS6-0198-000	810 - 29
RS6-0199-000	810 - 35
RS6-0200-000	810 - 36
RS6-0207-000	160 - 29
RS6-0208-000	160 - 7
RS6-0209-000	160 - 30
RS6-0217-000	810 - 31
RS6-0218-000	810 - 37
RS6-0219-000	810 - 56
RS6-0220-000	810 - 6
RS6-0221-000	810 - 5
RS6-0222-000	810 - 42
RS6-0223-000	810 - 4
RS6-0410-000	E30 - 35
RS6-0415-000	S11 - 20
	S55 - 3
RS6-0416-000	S55 - 6C
RS6-0419-000	S11 - 21
RS6-0420-000	S41 - 22
RS6-0421-000	S11 - 23
RS6-0430-000	S40 - 34
RS6-0431-000	S40 - 35
RS6-0432-000	S40 - 36
RS6-0433-000	S40 - 37
RS6-0434-000	S40 - 38
RS6-0757-000	160 - 28
RS6-0758-000	160 - 51
RS6-2001-000	S11 - 29C
	S50 - 32B
RS6-2002-000	S50 - 25
RS6-2005-000	S11 - 24
RS6-2006-000	S11 - 35D
RS6-2010-000	S40 - 39
RS6-2011-000	S40 - 40
RS6-2012-000	S40 - 41
RS6-2013-000	S40 - 5K
RS6-2014-000	S40 - 5L
RS6-2249-000	160 - 40
RS6-2252-000	160 - 20
VS1-0842-003	E20 - 40A
VS1-5057-002	310 - 109
	315 - 6
	S11 - 26
VS1-5057-003	105 - 18
	160 - 55
	310 - 45
VS1-5057-008	310 - 134
VS1-5820-003	102 - 9
VS1-5820-008	103 - 11
VS1-5820-014	310 - 94
VS1-6173-014	310 - 95
	S11 - 36G
VS1-6174-014	310 - 86
	E11 - 6D
	S11 - 36H
VT2-5159-025	120 - 5
WC2-5330-000	104 - 25
	310 - 107
WG8-5309-000	310 - 87
	S40 - 42
	S50 - 26

PART NUMBER	FIGURE & KEY NO.
WG8-5309-000	S50 - 33E
	S55 - 9E
WG8-5362-000	105 - 28
	160 - 15
	255 - 7
	350 - 1
	E11 - 6E
WS6-5091-000	S40 - 43
WS6-5092-000	S11 - 36J
WT2-0204-000	310 - 88
	S11 - 40
	S55 - 14
WT2-0317-000	E11 - 6K
	S11 - 39
WT2-0387-000	S50 - 36
WT2-0434-000	310 - 52
WT2-0482-000	S11 - 42
WT2-0499-000	104 - 10
	S11 - 34
WT2-5026-000	S11 - 41
	S50 - 33A
	S55 - 11
WT2-5058-000	105 - 15
	310 - 36
	S11 - 37F
	S50 - 28
WT2-5061-000	S11 - 25
WT2-5424-000	104 - 24
XA9-0253-000	102 - 14
XA9-0259-000	S40 - 1
XA9-0326-000	810 - 24
	W10 - 2
XA9-0387-000	255 - 6
XA9-0500-000	810 - 39
XA9-0591-000	150 - 14
	160 - 50
XA9-0606-000	E30 - 20
	E30 - 24A
XA9-0650-000	S11 - 31
XA9-0770-000	310 - 13
XA9-0824-000	S11 - 30
XA9-0836-000	S11 - 36L
	S11 - 38
	S40 - 44
	S50 - 29
	S55 - 15
XA9-0870-000	100 - 14
XA9-0903-000	E30 - 23C
XA9-0915-000	E11 - 6F
XA9-0917-000	E11 - 4
	E20 - 39
XA9-0922-000	103 - 8
XA9-0924-000	S11 - 5
	S11 - 36K
	S40 - 45
	S50 - 35
	S55 - 10
XA9-0951-000	105 - 4
XA9-1029-000	104 - 28
XA9-1159-000	102 - 11
	103 - 5
	104 - 20
	105 - 8
	105 - 16
	150 - 6
	160 - 8
	160 - 31
	255 - 4
	310 - 89
	810 - 40
	810 - 61
XA9-1161-000	100 - 7
	102 - 6
	104 - 22
	105 - 9
	105 - 11
	120 - 2
	150 - 10
	160 - 32
	310 - 90
	810 - 38
XA9-1162-000	810 - 45
	810 - 60
XB1-1300-807	120 - 501
XB1-2300-406	S11 - 37D

www.drukparts.pl

PART NUMBER	FIGURE & KEY NO.	PART NUMBER	FIGURE & KEY NO.	PART NUMBER	FIGURE & KEY NO.
XB1-2300-407	310 - 501				
XB1-2300-605	S11 - 502				
	S40 - 501				
	S55 - 501				
XB1-2400-407	150 - 501				
XB4-7400-609	S55 - 9D				
XB4-7400-809	160 - 502				
XB4-7401-007	S11 - 503				
	S40 - 506				
XB4-7401-009	160 - 501				
	315 - 501				
XB5-2300-609	E11 - 501				
XB5-6300-609	255 - 502				
XB6-7300-409	S11 - 505				
XD1-1106-239	E11 - 8K				
XD2-1100-402	S40 - 5M				
	S40 - 502				
	S55 - 5D				
	S55 - 6D				
XD2-1100-502	E11 - 8H				
	S11 - 501				
	S11 - 504				
	S40 - 503				
	S50 - 501				
	S55 - 502				
XD2-1200-402	810 - 7				
XD3-1300-102	S11 - 37E				
XD3-2160-122	S40 - 504				
XD3-2160-142	S40 - 505				
XD3-2160-182	S40 - 5A				
XD3-2200-122	S55 - 6E				
XD9-0103-000	160 - 36				
	310 - 48				
XD9-0104-000	810 - 21				
XD9-0108-000	255 - 501				
XD9-0111-000	160 - 41				
XD9-0134-000	160 - 33				
	310 - 70				
	E20 - 36				
	E30 - 25K				
XD9-0135-000	310 - 85				
	810 - 50				
	E20 - 37				
XD9-0136-000	105 - 20				
	160 - 34				
	310 - 91				
	810 - 43				
	810 - 57				
	E30 - 19D				
XD9-0137-000	255 - 5				
XD9-0179-000	310 - 100				
XF9-0652-000	S55 - 4				
XF9-0653-000	S40 - 46				
XF9-0654-000	S40 - 47				
XF9-0655-000	S40 - 48				
XG9-0350-000	E11 - 8F				
XG9-0373-000	810 - 64				
XH9-0103-000	310 - 34				
	E11 - 9				
	S11 - 28				

www.drukparts.pl

COPYRIGHT © 2000 CANON INC.
CANON CLBP-400 REV.0 MAY 2000 PRINTED IN JAPAN [IMPRIME AU JAPON]

Prepared by
Peripheral Products Quality Planning Div.
Peripheral Products Technical Documentation Dept.
CANON INC
Printed in Japan

REVISION 0 [MAY 2000]

5-1, Hakusan 7-chome, Toride-shi, Ibaraki 302-8501, Japan

www.drukparts.pl

The printing paper contains
70% waste paper.

Canon

www.drumparts.pl

PRINTED IN JAPAN [IMPRIME AU JAPON]

CANON INC.